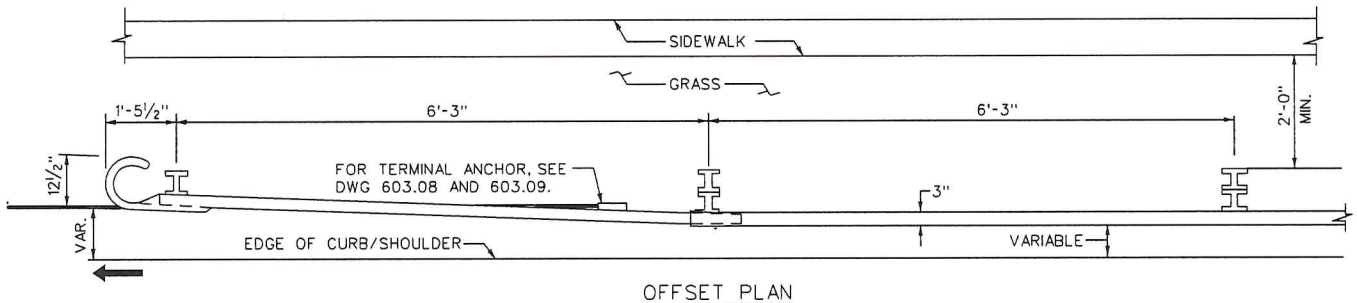

OFFSET PLAN

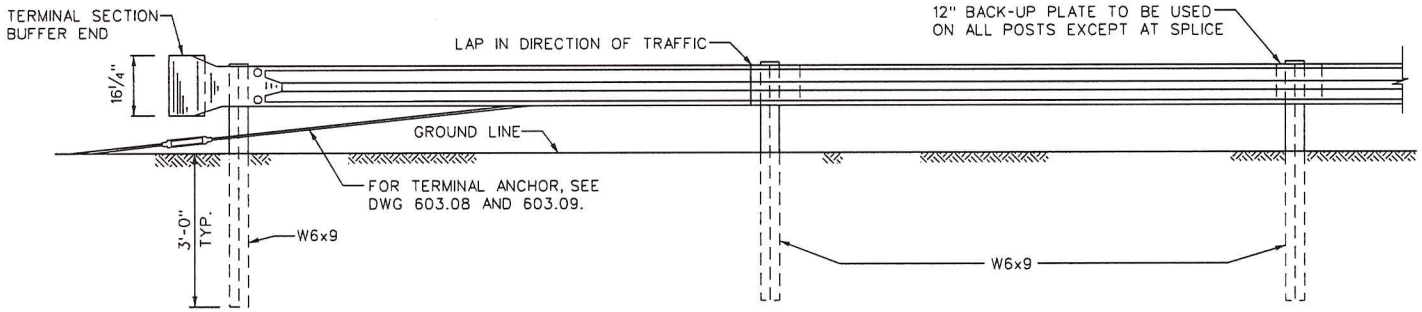

ELEVATION

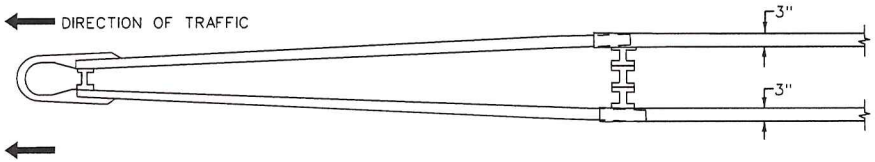

BARRIER PLAN

NOTES:

1. RAIL SECTIONS TO BE 12'-6" LONG, 12 GAUGE (MIN.), AASHTO SPEC. M180 CLASS A (25' LENGTHS OPTIONAL).
2. STANDARD TERMINALS FOR TRAILING EDGE INSTALLATIONS.
3. SEE CONTRACT PLANS FOR OFFSETS.

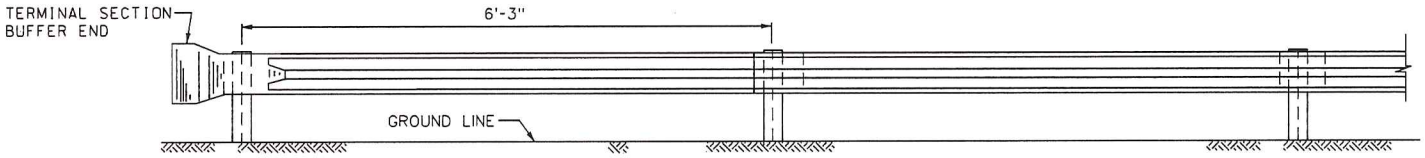

ELEVATION

ISSUED: 8/2015	RECOMMENDED: PROJECT MANAGER	W-BEAM GUARDRAIL TRAILING END TERMINAL	d. DISTRICT OF COLUMBIA DEPARTMENT OF TRANSPORTATION
REVISION / APPROVAL	APPROVED: Muhammed Khalid CHIEF ENGINEER		DWG. NO. 603.01

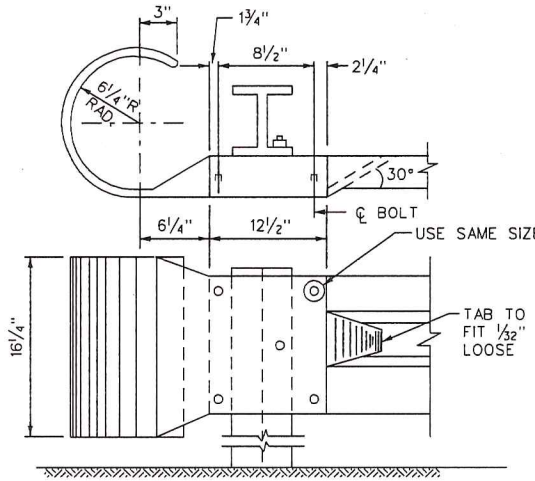

TRAILING END POST DETAIL
WITH STANDARD BUFFER END TERMINAL

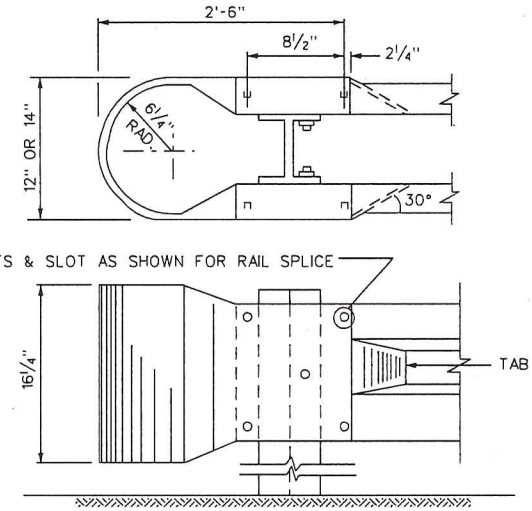

TRAIL END POST DETAIL-BARRIER TYPE
WITH STANDARD BUFFER END TERMINAL

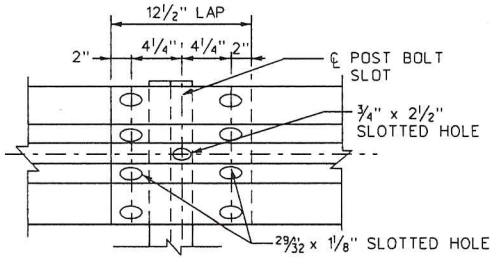

ELEVATION OF
GUARDRAIL SPLICE JOINT

LAP IN DIR. OF TRAFFIC

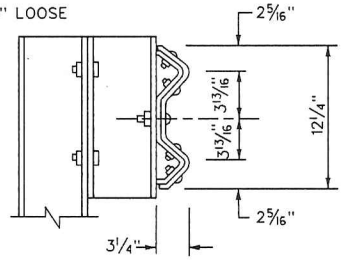

GUARDRAIL SPLICE

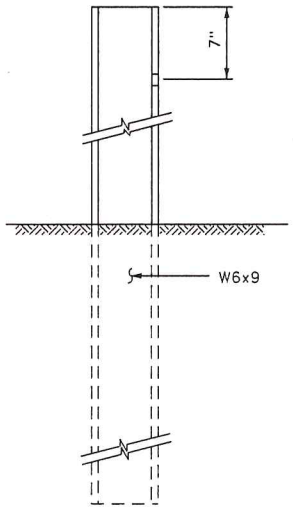

END POST DETAIL

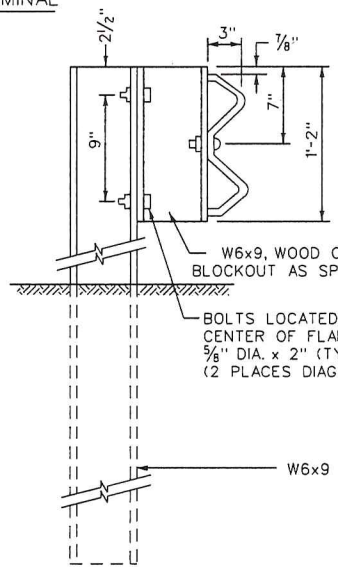

LINE POST DETAIL-OFFSET PLAN

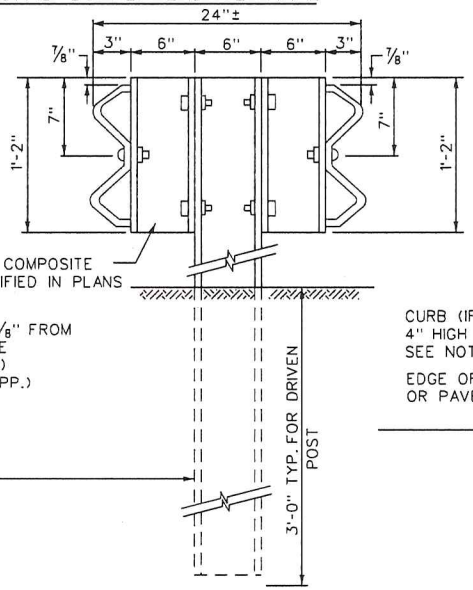

LINE POST DETAIL-BARRIER PLAN

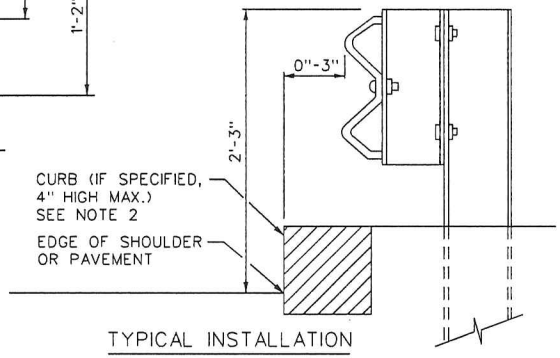

TYPICAL INSTALLATION

NOTES:

1. ALL POST RAILS AND FITTINGS SHALL BE GALVANIZED.
2. GUARDRAIL CURB COMBINATION SHALL NOT BE USED ON HIGH SPEED FACILITIES.

ISSUED: 8/2015	RECOMMENDED: PROJECT MANAGER
REVISION / APPROVAL	APPROVED: Muhammed Khalid CHIEF ENGINEER

W-BEAM GUARDRAIL DETAILS - 1

d. DISTRICT OF COLUMBIA DEPARTMENT OF TRANSPORTATION

DWG. NO. 603.02

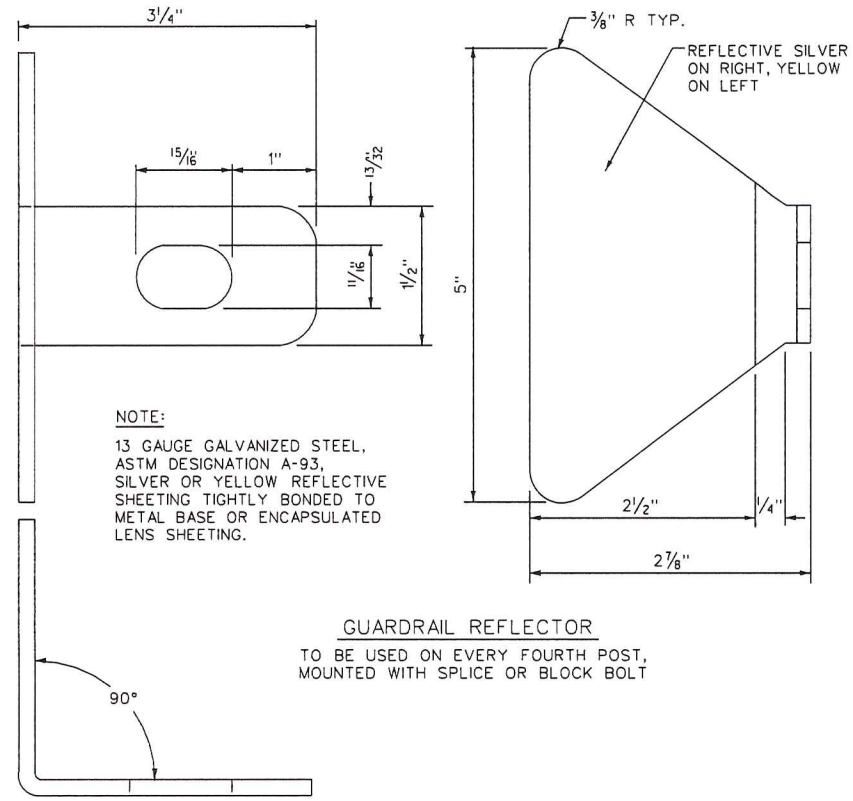

NOTE:

13 GAUGE GALVANIZED STEEL, ASTM DESIGNATION A-93, SILVER OR YELLOW REFLECTIVE SHEETING TIGHTLY BONDED TO METAL BASE OR ENCAPSULATED LENS SHEETING.

GUARDRAIL REFLECTOR

TO BE USED ON EVERY FOURTH POST, MOUNTED WITH SPLICE OR BLOCK BOLT

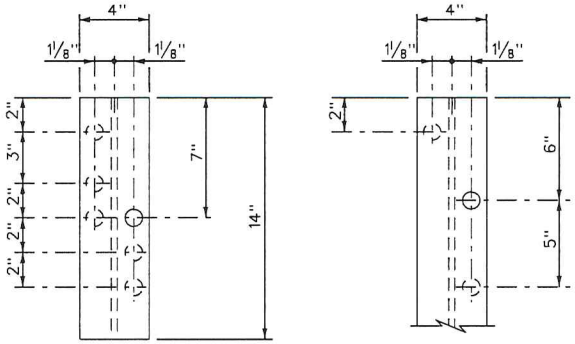

FRONT VIEW OFFSET BLOCK

FRONT VIEW POST

BOLT HOLE LOCATIONS

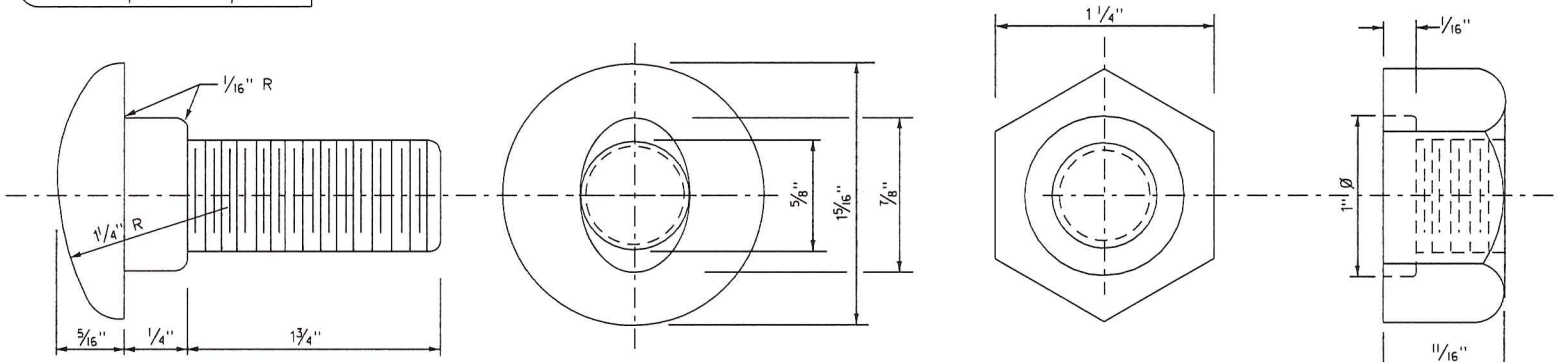

BOLT AND NUT DETAIL

ISSUED: 8/2015	RECOMMENDED: Adil Rizi PROJECT MANAGER	W-BEAM GUARDRAIL DETAILS - 2	d. DISTRICT OF COLUMBIA DEPARTMENT OF TRANSPORTATION
REVISION / APPROVAL	APPROVED: Muhammed Khalid CHIEF ENGINEER		DWG. NO. 603.03

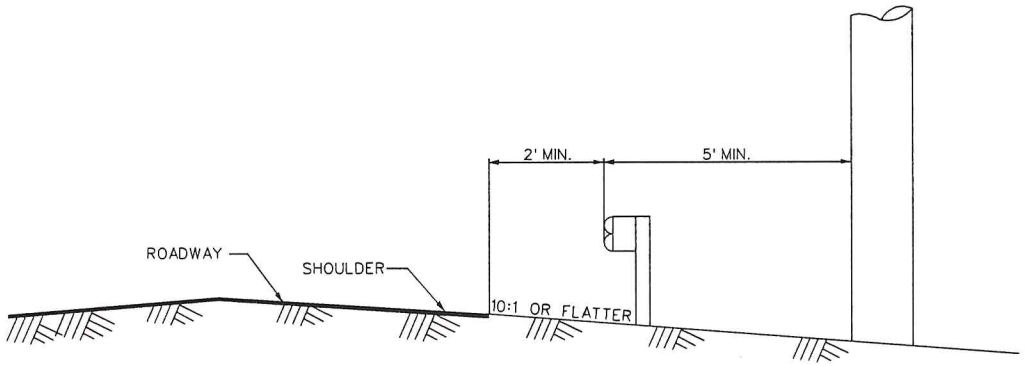

OBSTACLE PROTECTION

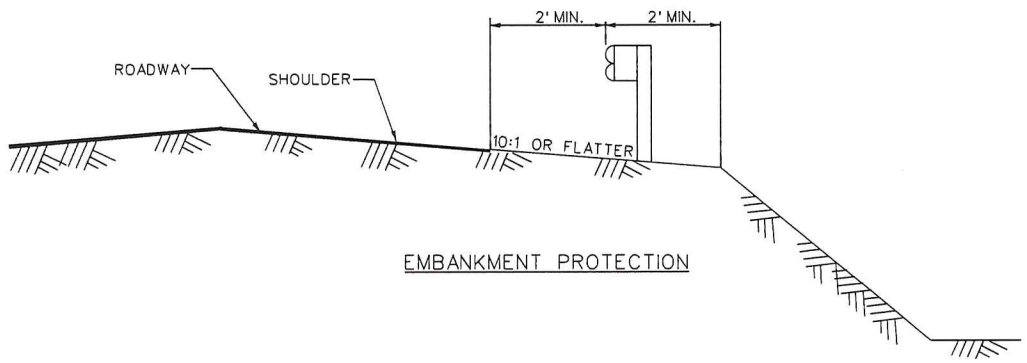

EMBANKMENT PROTECTION

BARRIER TO OBSTACLE DISTANCE FOR ROADSIDE PROTECTION

STRONG POST - WOOD OR STEEL

ISSUED: 8/2015	RECOMMENDED: PROJECT MANAGER	BARRIER TO OBSTACLE DISTANCE	d. DISTRICT OF COLUMBIA DEPARTMENT OF TRANSPORTATION
REVISION / APPROVAL	APPROVED: Muhammed Khalid CHIEF ENGINEER		DWG. NO. 603.04

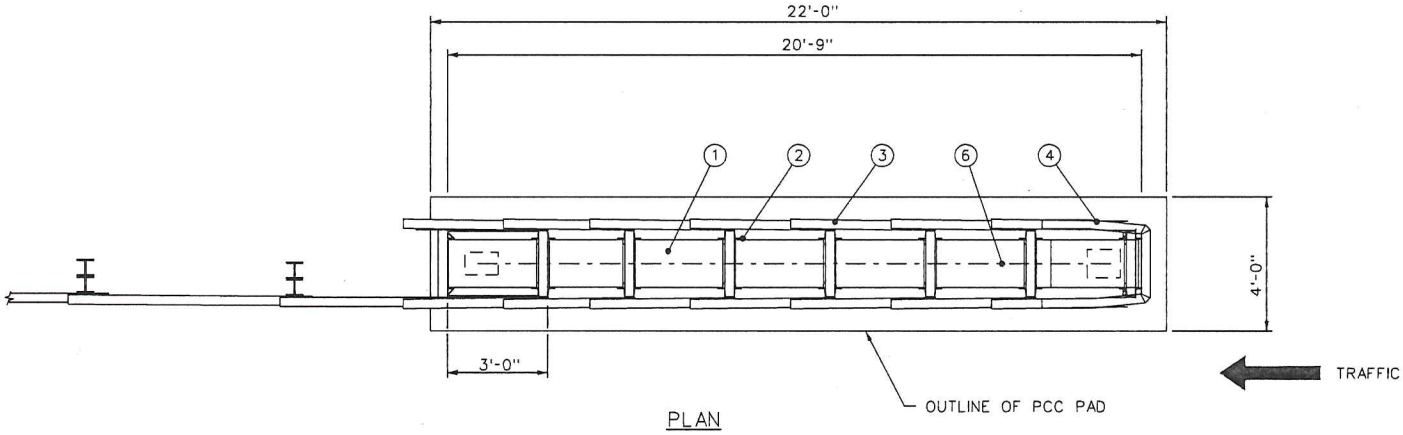

PLAN

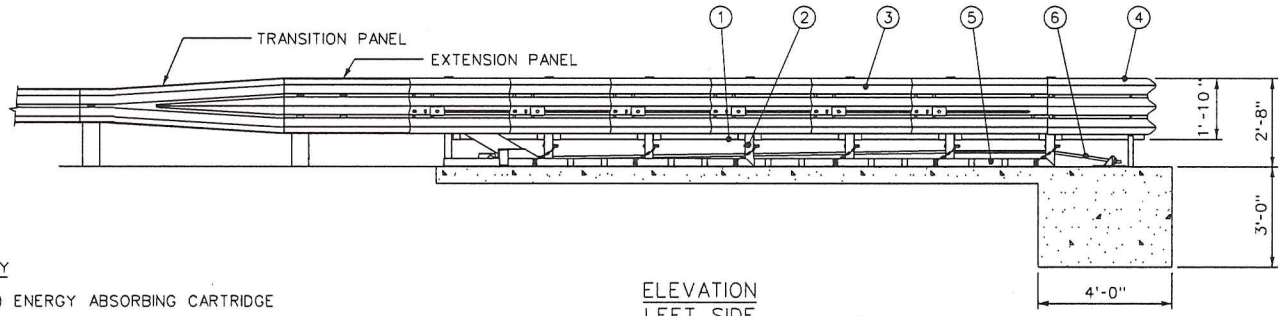

ELEVATION
LEFT SIDE

KEY

1. ENERGY ABSORBING CARTRIDGE
2. DIAPHRAGM
3. BEAM FENDER PANEL (THRIE BEAM SHOWN)
4. NOSE COVER
5. CHAIN RAIL - TRACK RAIL
6. RESTRAINING CABLE

NOTES:

1. REMOVE ALL CURBS AND ISLANDS FOR PROPER IMPACT PERFORMANCE.
2. 6" MIN. REINFORCED CLASS B PCC PAD OR 8" MIN. NON-REINFORCED CLASS B PCC ROADWAY, OR AS SPECIFIED BY MANUFACTURER.
3. TRANSITION PANEL IS SHOWN ON DWG. 603.06.
4. CORRUGATED STEEL FENDOR PANELS MAY BE THRIE BEAM, QUAD BEAM OR OTHER MANUFACTURED CONFIGURATION IN CONFORMANCE WITH NCHRP REPORT 350, TL3.
5. EXTENSION PANEL SHALL BE SUPPLIED BY MANUFACTURER OF SELECTED CRASH CUSHION SYSTEM.
6. CRASH CUSHIONS SHALL NOT BLOCK CROSSWALK/SIDEWALK.

ISSUED: 8/2015	
REVISION	APPROVAL

RECOMMENDED: Adil Rizi
PROJECT MANAGER

APPROVED: Muhammed Khalid
CHIEF ENGINEER

CRASH CUSHION WITH THRIE BEAM TRANSITION

d. DISTRICT OF COLUMBIA
DEPARTMENT OF TRANSPORTATION

DWG. NO. 603.05

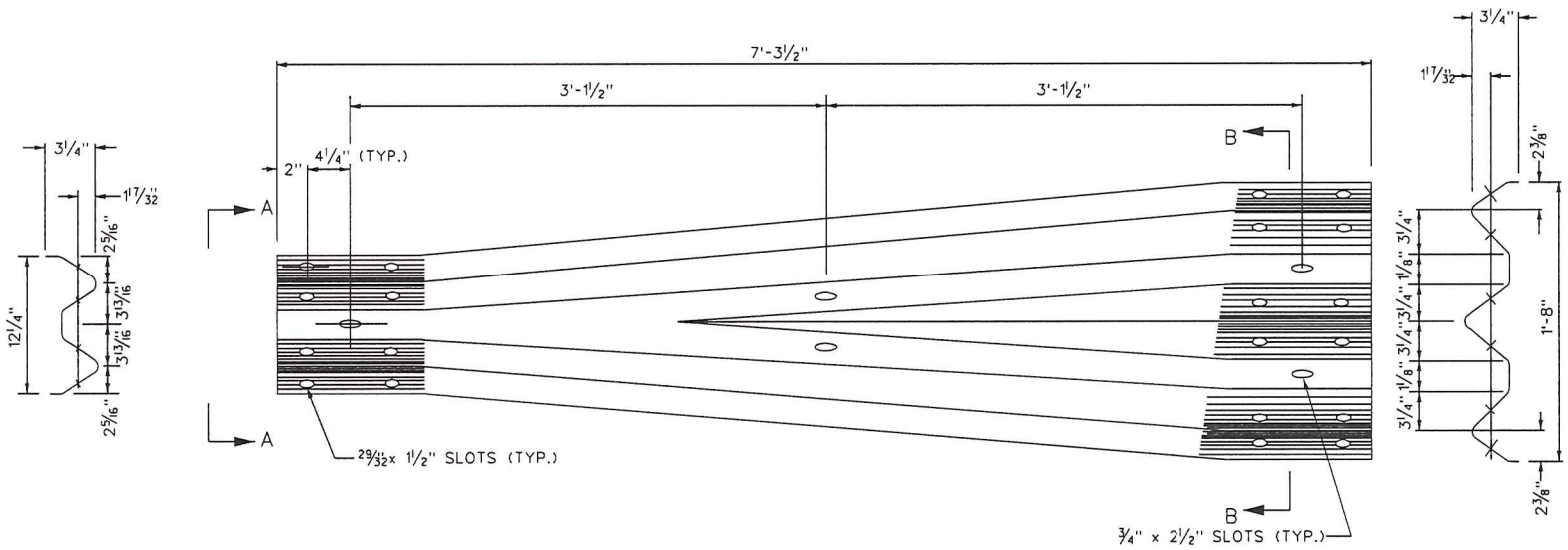

SECTION A-A

SIDE VIEW

SECTION B-B

NOTE:

1. EXTENSION PANEL SUPPLIED BY MANUFACTURER TO FIT THRIE BEAM.

ISSUED: 8/2015	RECOMMENDED: PROJECT MANAGER	W-BEAM TO THRIE BEAM TRANSITION PANEL	d. DISTRICT OF COLUMBIA DEPARTMENT OF TRANSPORTATION
REVISION / APPROVAL	APPROVED: Muhammed Khalid CHIEF ENGINEER		DWG. NO. 603.06

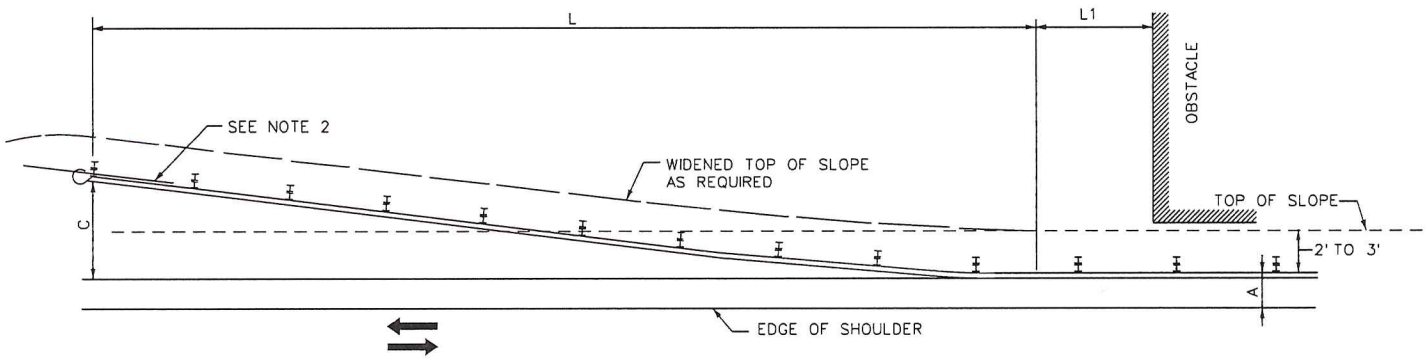

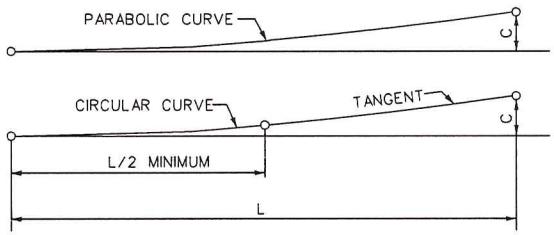

ALTERNATE TYPES OF FLARE

C= 4' MIN. (2' SPECIAL CASES; 8'-10' DESIRABLE IN MEDIAN.)

L= 15C DESIRABLE; 10C MINIMUM.

A= REQUIRED SHY DISTANCE

L1= TRANSITION LENGTH

FLARED TRAILING TERMINAL

SECTION FOR GUARDRAIL

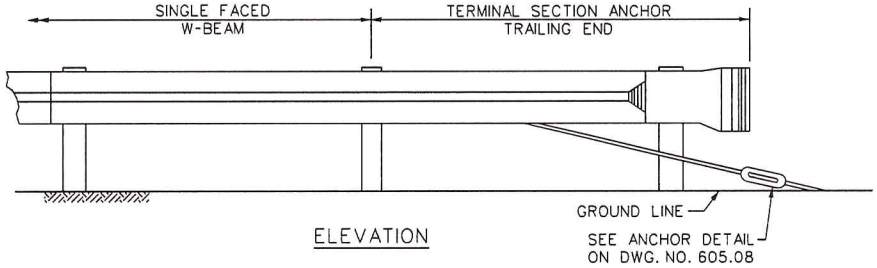

ELEVATION

NOTES:

1. DIRECTION OF TRAFFIC. →
2. TERMINAL SECTION ANCHOR MAY BE USED AT TRAILING END OF GUARDRAIL.
3. SEE PLANS FOR TYPE TO BE USED AND LENGTH OF FLARE.
4. SEE PLANS FOR DIMENSIONS 'A' AND 'C'.
5. FLARE ONLY REQUIRED IF ADJACENT ROADWAY HAS TWO-WAY TRAFFIC.

ISSUED: 8/2015	RECOMMENDED: PROJECT MANAGER	W-BEAM TRAILING TERMINAL SECTION ANCHOR AND FLARE CRITERIA	d. DISTRICT OF COLUMBIA DEPARTMENT OF TRANSPORTATION
REVISION / APPROVAL	APPROVED: Muhammed Kholid CHIEF ENGINEER		DWG. NO. 603.07

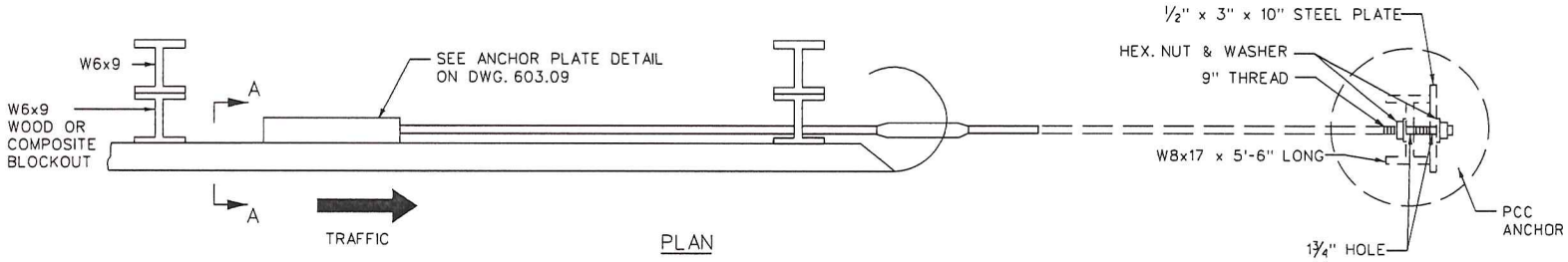

PLAN

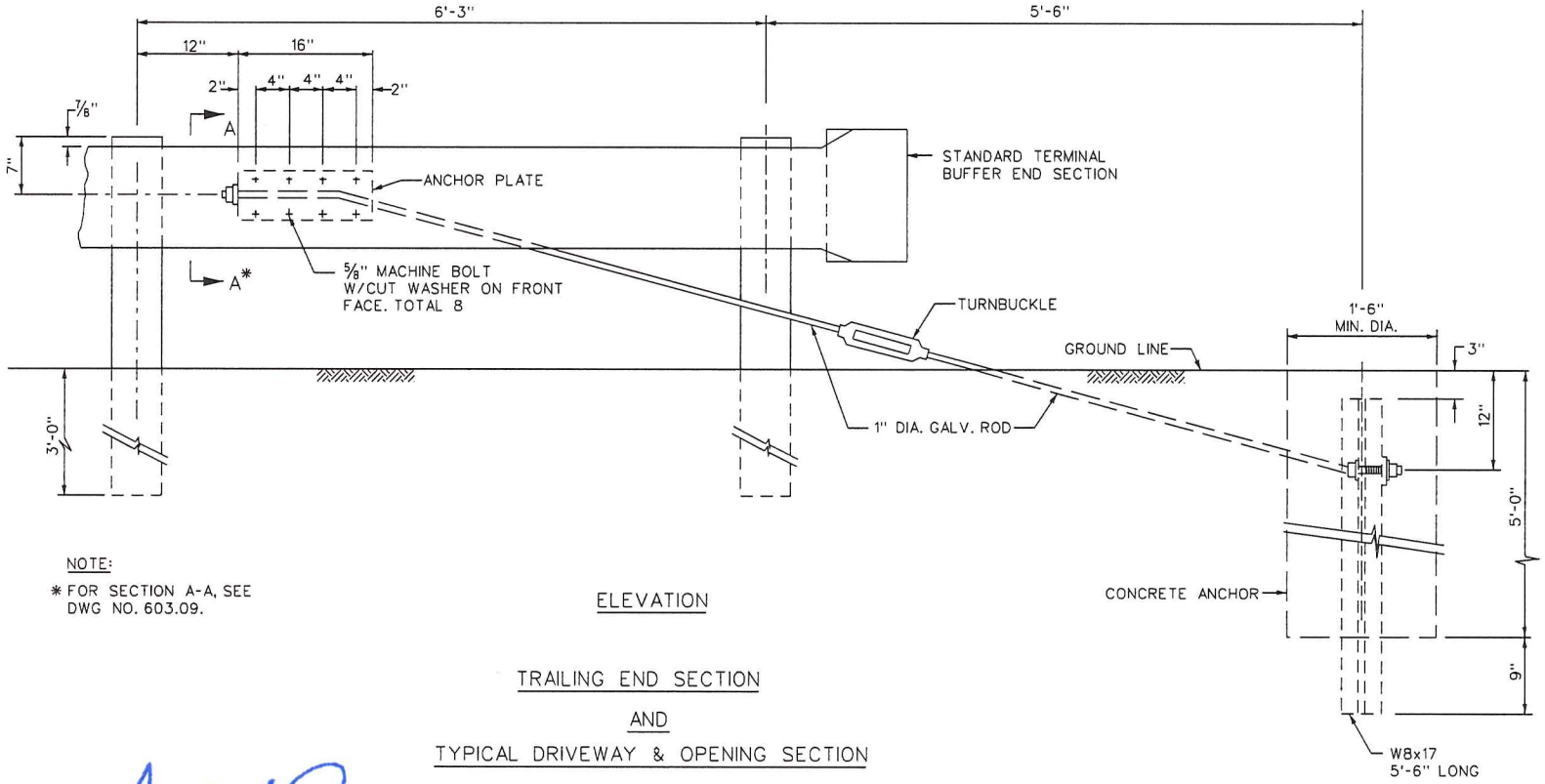

NOTE:

* FOR SECTION A-A, SEE DWG NO. 603.09.

ELEVATION

TRAILING END SECTION

AND

TYPICAL DRIVEWAY & OPENING SECTION

ISSUED: 8/2015	RECOMMENDED: PROJECT MANAGER	W-BEAM TRAILING TERMINAL SECTION ANCHOR	d. DISTRICT OF COLUMBIA DEPARTMENT OF TRANSPORTATION
REVISION / APPROVAL	APPROVED: Muhammed Khalid CHIEF ENGINEER		DWG. NO. 603.08

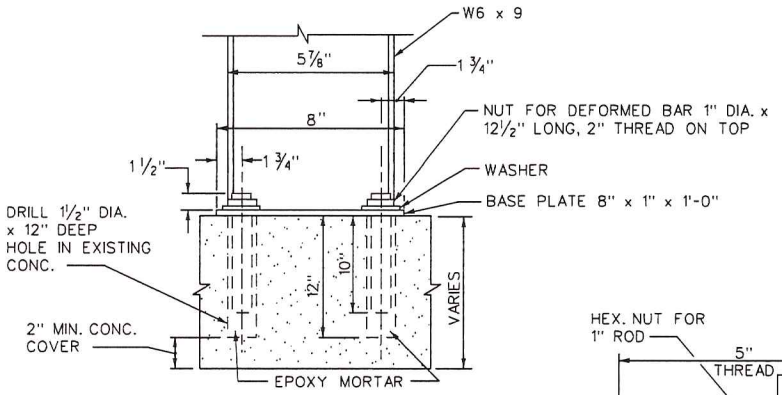

BOLTED BASE CONNECTION - ELEVATION

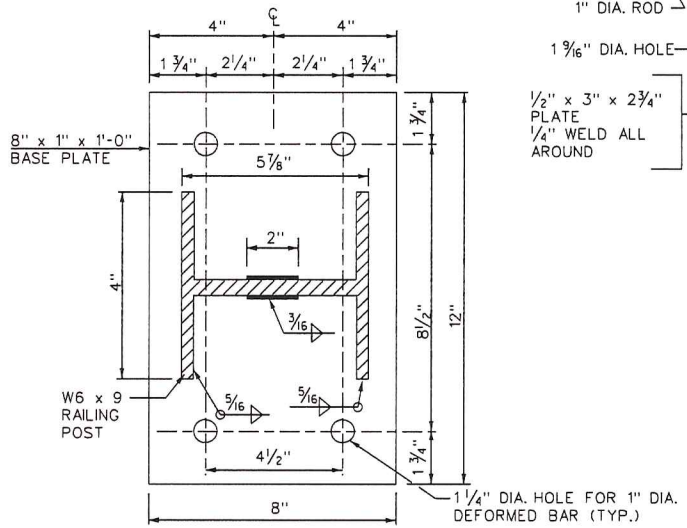

ANCHORAGE & BASE PLATE DETAIL

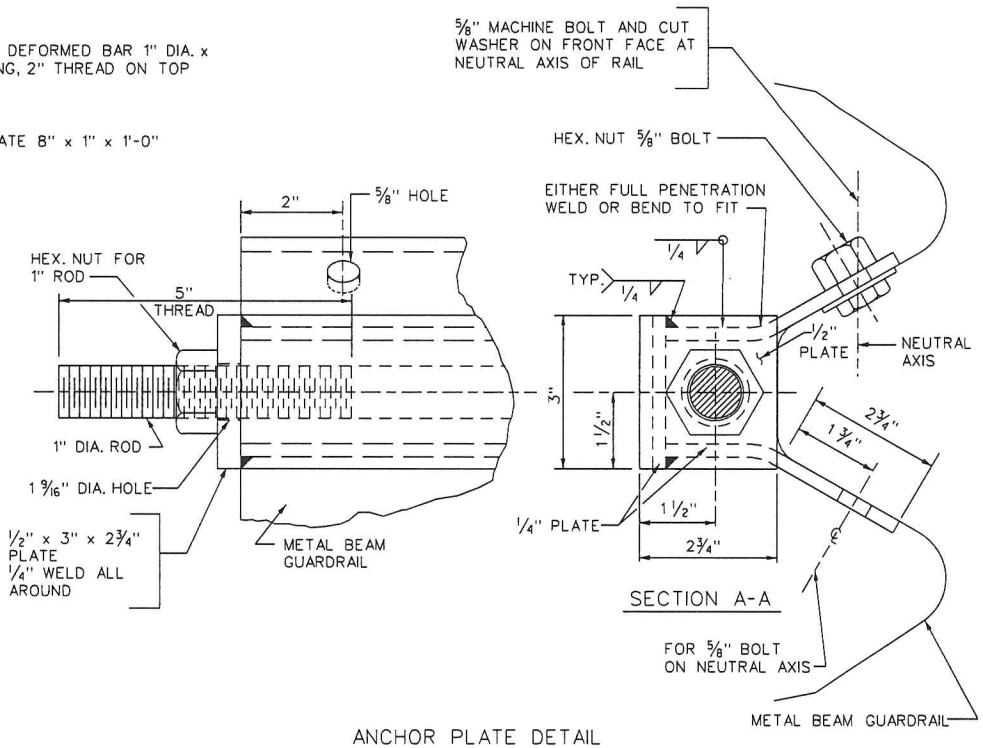

ANCHOR PLATE DETAIL

NOTES FOR BOLTED CONNECTION:

1. HOLES SHALL BE DRILLED IN EXISTING CONCRETE 1 1/2" DIA. x 12" DEEP.
2. DEFORMED BARS SHALL BE 12 1/2" LONG WITH 2" THREAD ON TOP.
3. REMAINDER OF HOLE SHALL BE FILLED WITH EPOXY MORTAR.
4. OTHER BOLTED CONNECTIONS SHALL BE AS SHOWN ELSEWHERE.
5. FOR LOCATION OF SECTION A-A, SEE DWG. NO. 603.08.

ISSUED: 8/2015	RECOMMENDED: PROJECT MANAGER	W-BEAM TRAILING TERMINAL SECTION PLATE MISCELLANEOUS DETAILS	d. DISTRICT OF COLUMBIA DEPARTMENT OF TRANSPORTATION
REVISION / APPROVAL	APPROVED: Mohammed Khalid CHIEF ENGINEER		DWG. NO. 603.09

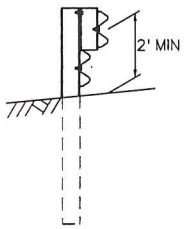

SECTION A-A

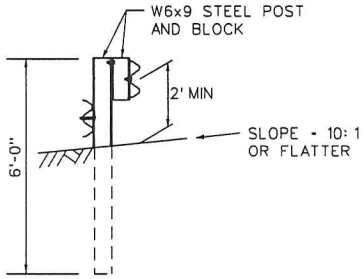

SECTION B-B

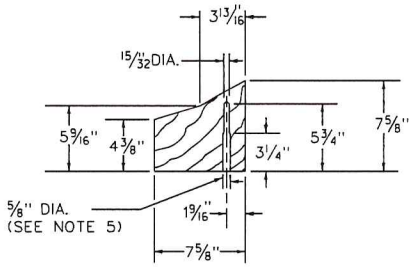

8" x 8" WOOD BLOCK
NOMINAL SIZE

NOTES:

1. THIS GUARDRAIL TRANSITION IS APPROPRIATE FOR CONNECTION TO A VERTICAL CURVED BACK CONCRETE WALL AND SHALL NOT BE CONNECTED TO A CONCRETE SAFETY SHAPE OR VERTICAL CONCRETE WALL.
2. STANDARD BARRIER HARDWARE HAS BEEN USED TO DEVELOP THIS GUARDRAIL TRANSITION. SEE THE CURRENT EDITION OF "A GUIDE TO STANDARDIZED HIGHWAY BARRIER RAIL HARDWARE", CURRENT EDITION, AASHTO-AGC-ARTBA JOINT COOPERATIVE COMMITTEE.
3. THE RUBRAIL IS NOT CONNECTED TO THE VERTICAL CURVED BACK CONCRETE WALL. THE RUBRAIL AND THE FIRST TOP RAIL REQUIRE SPECIAL PUNCHING OF HOLES FOR BOLTING TO POSTS. ADDITIONALLY, THE RUBRAIL SHALL BE SHOP BENT IN THE LAST 3 FEET TO FACILITATE INSTALLATION.
4. POSTS 1 THROUGH 6 REQUIRE AN ADDITIONAL HOLE TO MOUNT THE RUBRAIL.
5. THE WOOD BLOCK SHALL BE CONNECTED TO THE BEAM WITH A 5/8" x 6" LONG GALVANIZED LAG BOLT.

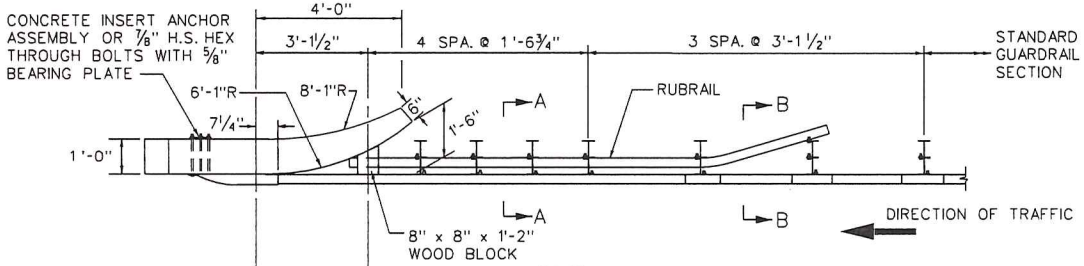

PLAN

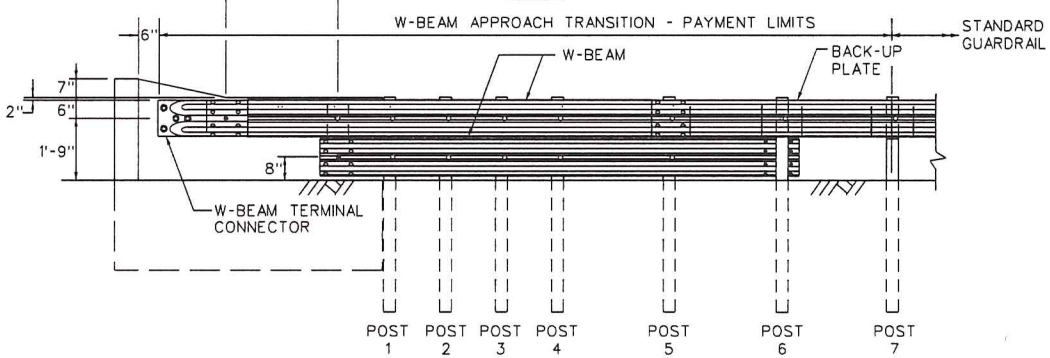

ELEVATION

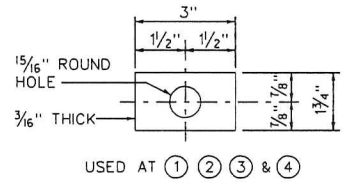

RECTANGULAR WASHER DETAIL (GALV.)

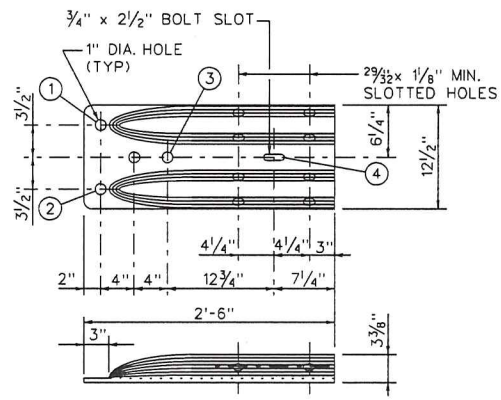

W-BEAM TERMINAL CONNECTOR DETAIL

ISSUED: 8/2015	RECOMMENDED: PROJECT MANAGER	W-BEAM APPROACH TRANSITION VERTICAL CURVED BACK CONCRETE BARRIER END W-BEAM WITH RUBRAIL - STEEL POSTS	d. DISTRICT OF COLUMBIA DEPARTMENT OF TRANSPORTATION
REVISION / APPROVAL	APPROVED: Muhammed Khalid CHIEF ENGINEER		DWG. NO. 603.10

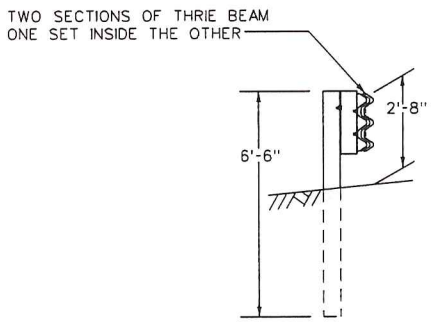

SECTION A-A

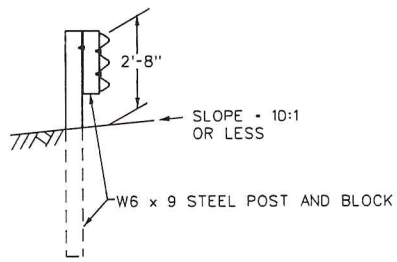

SECTION B-B

NOTES:

1. THIS GUARDRAIL TRANSITION IS APPROPRIATE FOR CONNECTION TO A VERTICAL CONCRETE SHAPE AND SHOULD NOT BE CONNECTED DIRECTLY TO A CONCRETE SAFETY SHAPE. CONCRETE SAFETY SHAPE BARRIERS SHOULD BE TRANSITIONED TO A VERTICAL SHAPE AT THE GUIDERAIL CONNECTION.
2. BRIDGE BARRIER ENDS AND BRIDGE PARAPETS SHALL BE OF ADEQUATE STRENGTH TO ACCEPT FULL IMPACT LOADING.
3. STANDARD BARRIER HARDWARE HAS BEEN USED TO DEVELOP THIS GUARDRAIL TRANSITION. SEE THE CURRENT EDITION OF "A GUIDE TO STANDARDIZED BARRIER RAIL HARDWARE", AASHTO-AGC-ARTBA JOINT COOPERATIVE COMMITTEE.
4. AT POST 7 BACK-UP PLATE BOLTED TO BLOCK ONLY.
5. THIS TRANSITION MAY BE CONNECTED TO A STANDARD W-BEAM GUARDRAIL SECTION BY ADDING A W-THRIE BEAM TRANSITION PANEL PER DRAWING NO. 603.12.

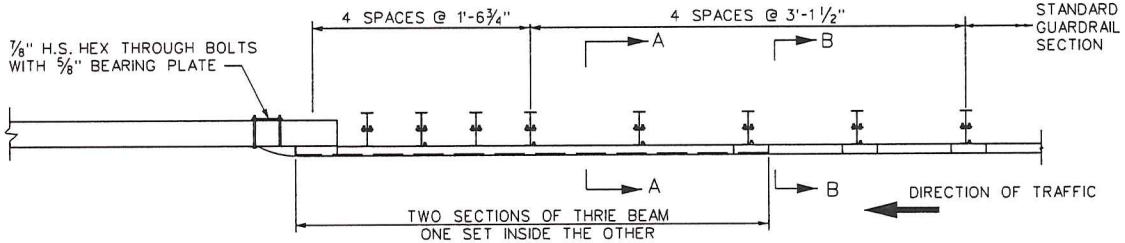

PLAN

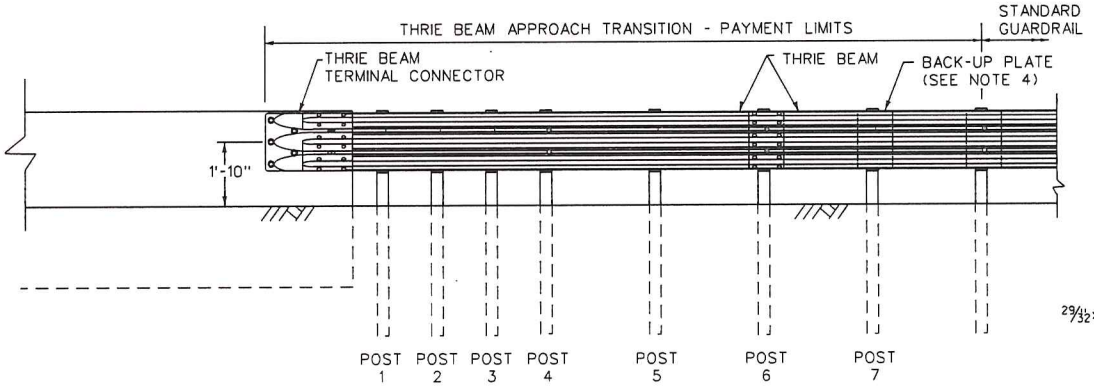

ELEVATION

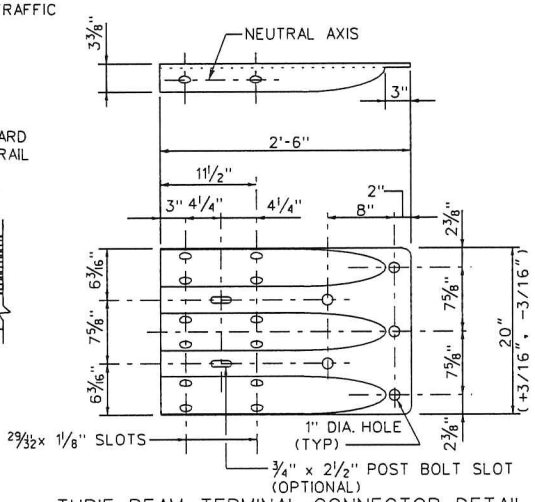

THRIE BEAM TERMINAL CONNECTOR DETAIL

ISSUED: 8/2015	RECOMMENDED: PROJECT MANAGER	THRIE BEAM APPROACH TRANSITION CONCRETE BARRIER END THRIE BEAM - STEEL POSTS	d. DISTRICT OF COLUMBIA DEPARTMENT OF TRANSPORTATION
REVISION / APPROVAL	APPROVED: CHIEF ENGINEER		DWG. NO. 603.11

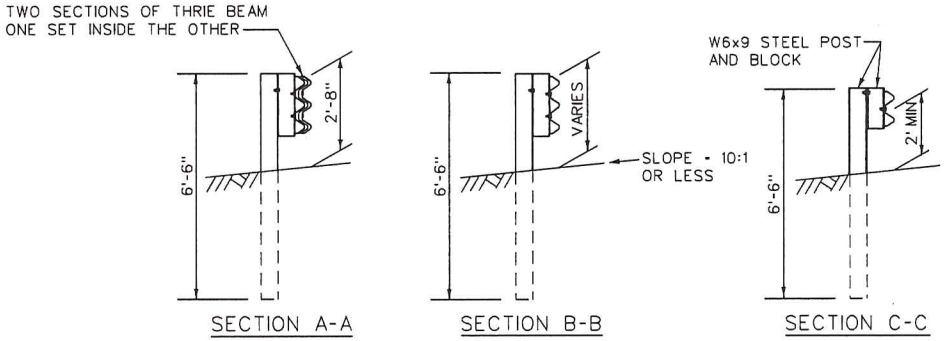

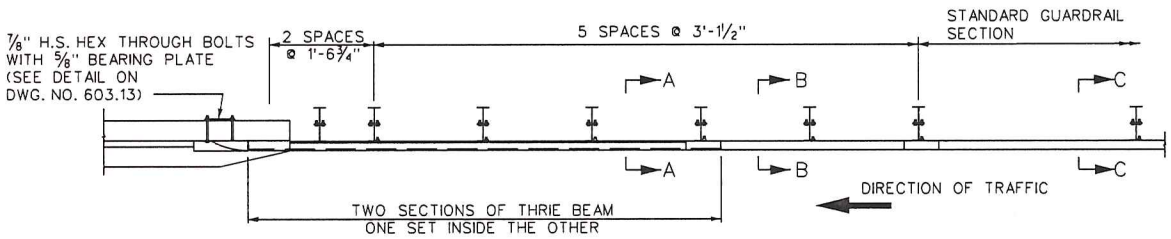

PLAN

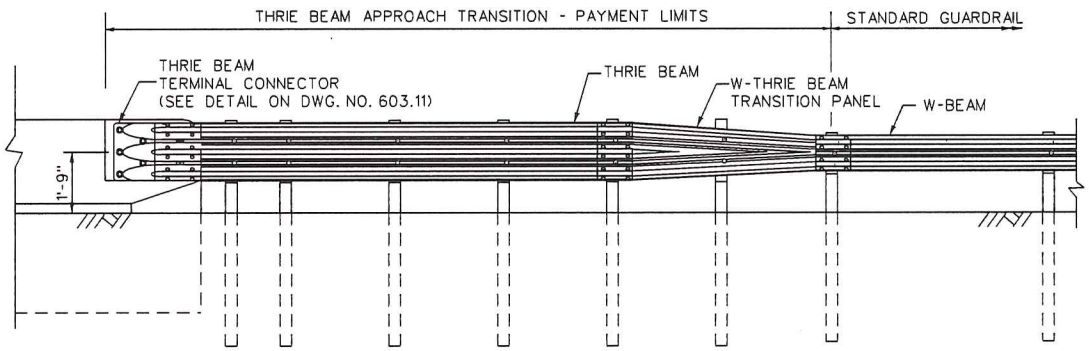

ELEVATION

NOTES:

1. THIS GUARDRAIL TRANSITION IS APPROPRIATE FOR CONNECTION TO A MODIFIED RECEIVER CAST INTO A SAFETY SHAPE AND SHOULD NOT BE CONNECTED DIRECTLY TO A CONCRETE SAFETY SHAPE BARRIER.
2. BRIDGE BARRIER ENDS AND BRIDGE PARAPETS SHALL BE OF ADEQUATE STRENGTH TO ACCEPT FULL IMPACT LOADING AND SHOULD BE DESIGNED CONSISTENT WITH AASHTO STANDARD SPECIFICATIONS FOR HIGHWAY BRIDGES, LATEST EDITION.
3. STANDARD BARRIER HARDWARE HAS BEEN USED TO DEVELOP THIS GUARDRAIL TRANSITION. SEE THE CURRENT EDITION OF "A GUIDE TO STANDARDIZED BARRIER RAIL HARDWARE", AASHTO-AGC-ARTBA JOINT COOPERATIVE COMMITTEE.
4. RAIL ELEMENTS REQUIRE TWO ADDITIONAL POST MOUNTING HOLES EACH FOR THE FIRST POST.
5. FOR DETAILS OF MODIFIED SAFETY SHAPE BARRIER, SEE DWG. NO. 603.13.
6. THIS TRANSITION MAY BE CONNECTED TO A STANDARD THRIE BEAM GUARDRAIL SECTION BY ELIMINATING THE W-THRIE BEAM TRANSITION PANEL.

ISSUED: 8/2015	RECOMMENDED: PROJECT MANAGER	THRIE BEAM APPROACH TRANSITION MODIFIED SAFETY SHAPE THRIE BEAM - STEEL POSTS	d. DISTRICT OF COLUMBIA DEPARTMENT OF TRANSPORTATION
REVISION / APPROVAL	APPROVED: Muhammed Kholid CHIEF ENGINEER		DWG. NO. 603.12

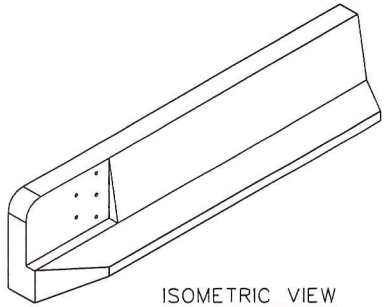

ISOMETRIC VIEW

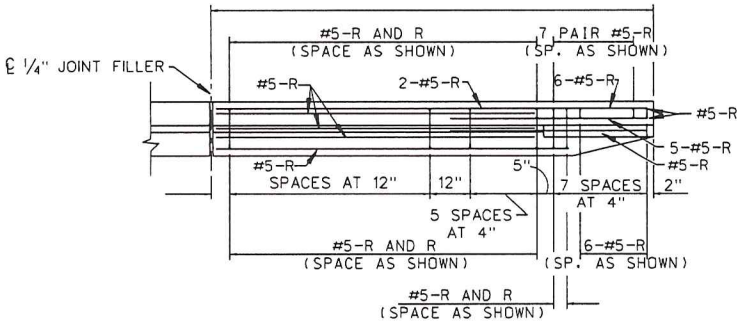

PLAN

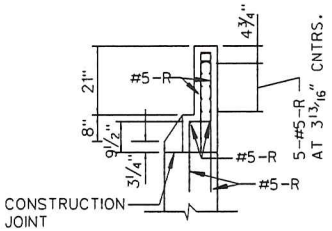

SECTION A-A

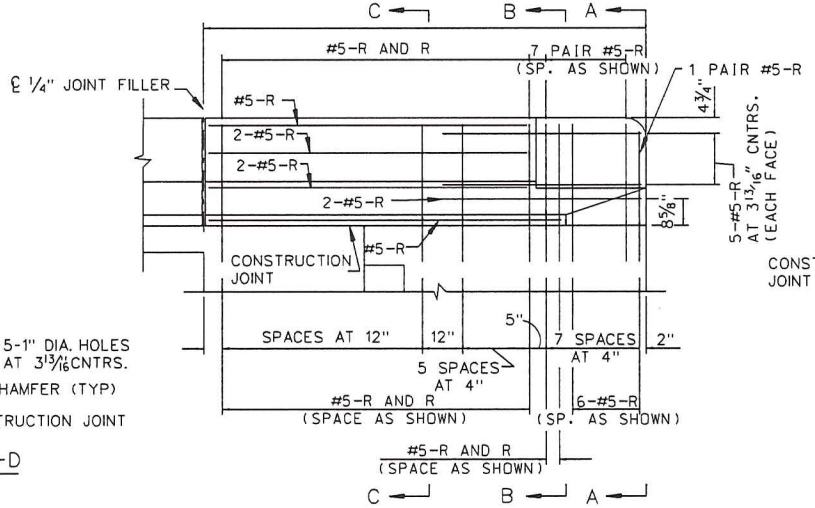

ELEVATION

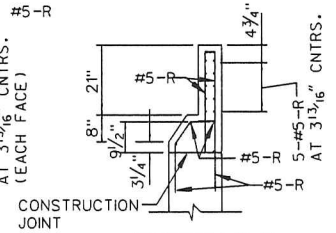

SECTION B-B

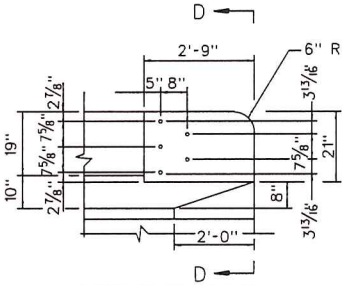

PART ELEVATION

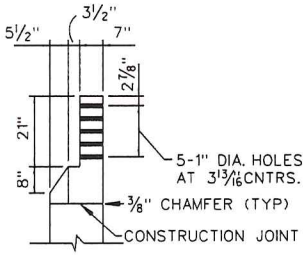

PART SECTION D-D

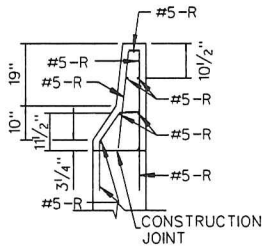

SECTION C-C

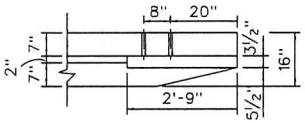

PART PLAN

DETAILS OF GUARDRAIL ATTACHMENT

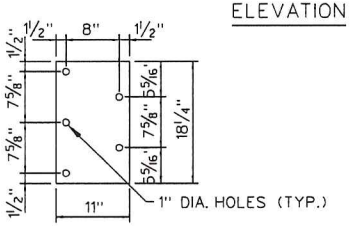

5/8" BEARING PLATE DETAIL

NOTE:

THE BEARING PLATE SHALL BE FABRICATED FROM ASTM A36 STEEL AND SHALL BE GALVANIZED.

ISSUED: 8/2015	RECOMMENDED: PROJECT MANAGER	THRIE BEAM APPROACH TRANSITION	d. DISTRICT OF COLUMBIA DEPARTMENT OF TRANSPORTATION
REVISION / APPROVAL	APPROVED: Muhammed Khalid CHIEF ENGINEER	DETAIL OF MODIFIED SAFETY SHAPE BARRIER THRIE BEAM - STEEL POSTS	DWG. NO. 603.13

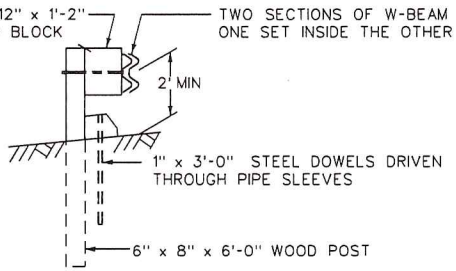

SECTION A-A

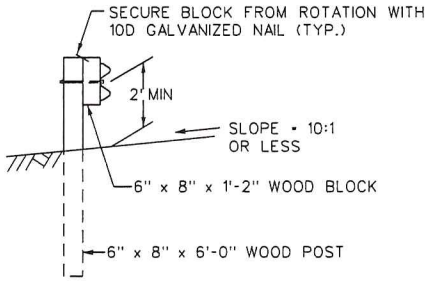

SECTION B-B

NOTES:

1. THIS GUARDRAIL TRANSITION IS APPROPRIATE FOR CONNECTION TO A CONCRETE SAFETY SHAPE.
2. BRIDGE BARRIER ENDS AND BRIDGE PARAPETS SHALL BE OF ADEQUATE STRENGTH TO ACCEPT FULL IMPACT LOADING.
3. STANDARD BARRIER HARDWARE HAS BEEN USED TO DEVELOP THIS GUARDRAIL TRANSITION. SEE THE CURRENT EDITION OF "A GUIDE TO STANDARDIZED BARRIER RAIL HARDWARE", AASHTO-AGC-ARTBA JOINT COOPERATIVE COMMITTEE.
4. W-BEAM IS NOT BOLTED TO POSTS AND BLOCKS AT POSTS 1, 2, 3, 5, AND 7. BLOCKS ARE BOLTED DIRECTLY TO POSTS.
5. FOR DETAILS OF SAFETY SHAPE, SEE DWG. NO. 603.15.

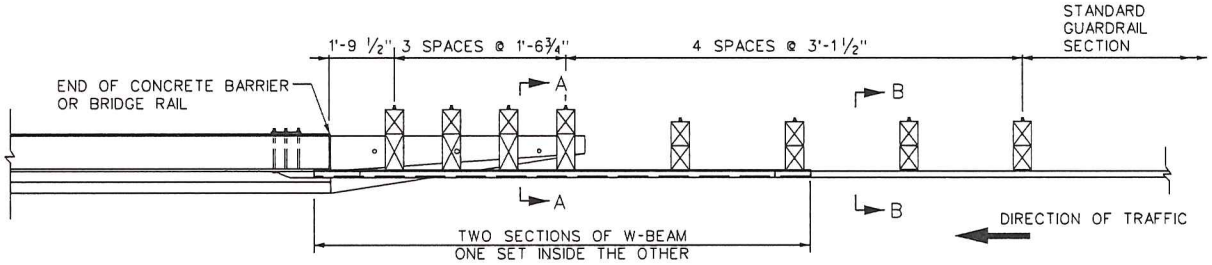

PLAN

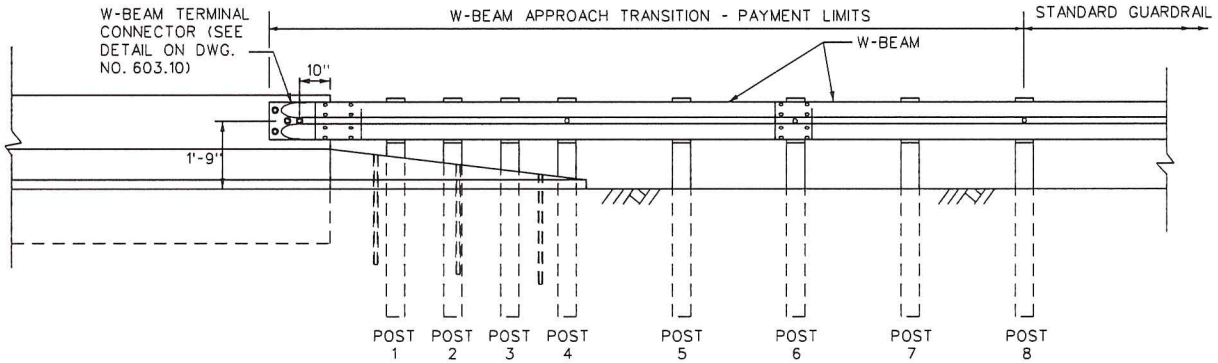

ELEVATION

ISSUED: 8/2015	RECOMMENDED: PROJECT MANAGER	W-BEAM APPROACH TRANSITION CONNECTION TO SAFETY SHAPE BARRIER WOOD POST WITH CURB GUARDRAIL DETAILS	d. DISTRICT OF COLUMBIA DEPARTMENT OF TRANSPORTATION
REVISION / APPROVAL	APPROVED: Muhammed Khalid CHIEF ENGINEER		DWG. NO. 603.14

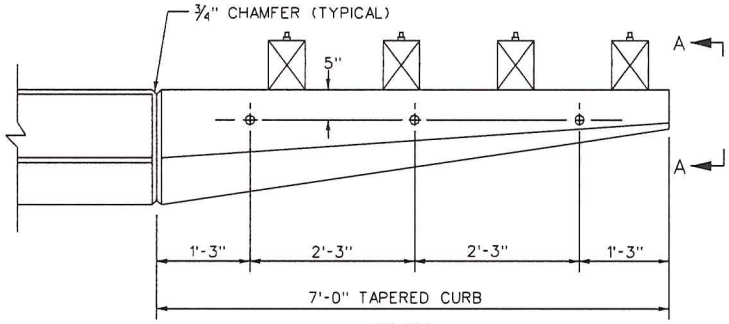

PLAN

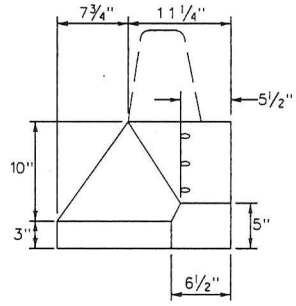

SECTION A-A

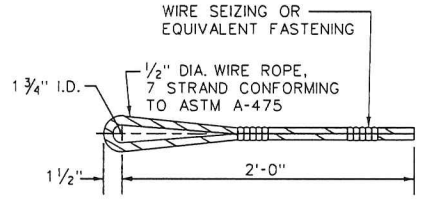

WIRE ROPE DETAIL

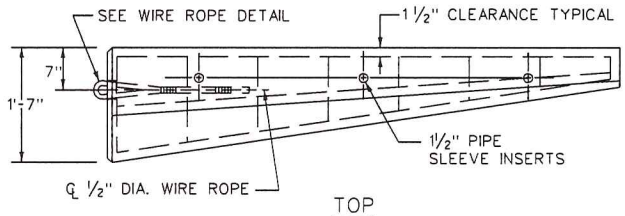

TOP

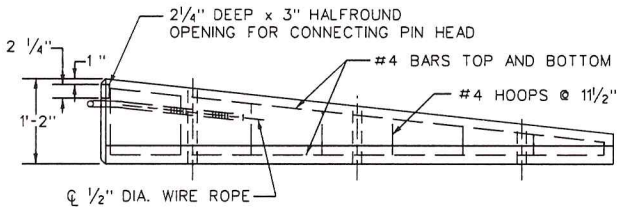

FRONT

LENGTH	BENT BARS				
	A	B	C	D	E
4' - 7½"	11"	1' - 4"	1' - 1½"	8"	3½"
4' - 1½"	9½"	1' - 2"	1' - 0"	7"	3½"
3' - 9"	8"	1' - 0½"	10½"	6½"	3½"
3' - 2½"	7"	10½"	8½"	5½"	3½"
2' - 10"	6"	9"	7"	5"	3½"
2' - 4"	4½"	7"	5"	4"	3½"
1' - 11½"	3½"	5½"	4"	3"	3½"
1' - 5"	2"	3½"	2"	2½"	3½"
STRAIGHT BARS ALL #4 6'-9"					

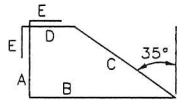

#4 HOOP DIMENSIONS OUT TO OUT

ISSUED: 8/2015	
REVISION	APPROVAL

RECOMMENDED: PROJECT MANAGER

APPROVED: Muhammed Khalid CHIEF ENGINEER

W-BEAM APPROACH TRANSITION
CONNECTION TO SAFETY SHAPE
WOOD POST WITH CURB
CURB DETAILS

d. DISTRICT OF COLUMBIA
DEPARTMENT OF TRANSPORTATION

DWG. NO. 603.15