INDEX

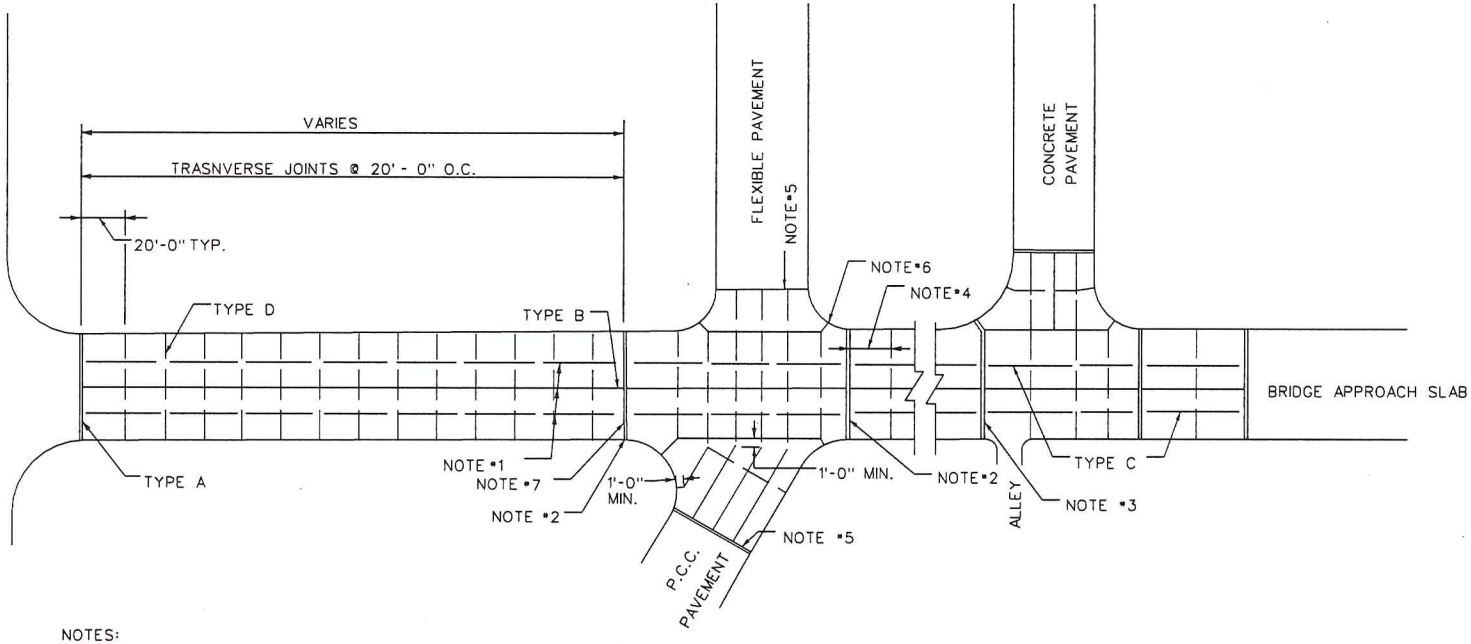

NOTES:

1. LANE WIDTH & LONGITUDINAL JOINT TYPE AS SHOWN ON CONTRACT DRAWINGS.
2. TRANSVERSE JOINT SPACING MAY BE ALTERED AT INTERSECTIONS TO ALLOW JOINTS TO COINCIDE WITH TANGENT POINTS.
3. TRANSVERSE JOINT SPACING MAY BE ALTERED TO ALLOW JOINTS TO COINCIDE WITH ALLEY RETURNS.
4. MAXIMUM DISTANCE BETWEEN TRANSVERSE JOINTS IS 20'-0".
5. JOINT TYPE DEPENDENT ON PAVEMENT OF INTERSECTING STREET.
6. JOINTS RUNNING INTO A CORNER ARE TO BE RADIAL TO THE CURVE.
7. TRANSVERSE EXPANSION JOINTS TO BE PLACED AT INTERSECTION STREET TANGENT POINTS OR 360'-0" MAX. SPACING.

JOINT LEGEND

TYPE A	═══	TRANSVERSE EXPANSION
TYPE B	———	LONGITUDINAL CONSTRUCTION
TYPE C	——— ———	LONGITUDINAL CONTRACTION
TYPE D	— — — —	TRANSVERSE CONTRACTION

ISSUED: 8/2015		RECOMMENDED: PROJECT MANAGER	TYPICAL JOINT LAYOUT P.C.C. PAVEMENT AND BASE	d. DISTRICT OF COLUMBIA DEPARTMENT OF TRANSPORTATION
REVISION	APPROVAL			
		APPROVED: Mohammed Khalid CHIEF ENGINEER		DWG. NO. 501.01

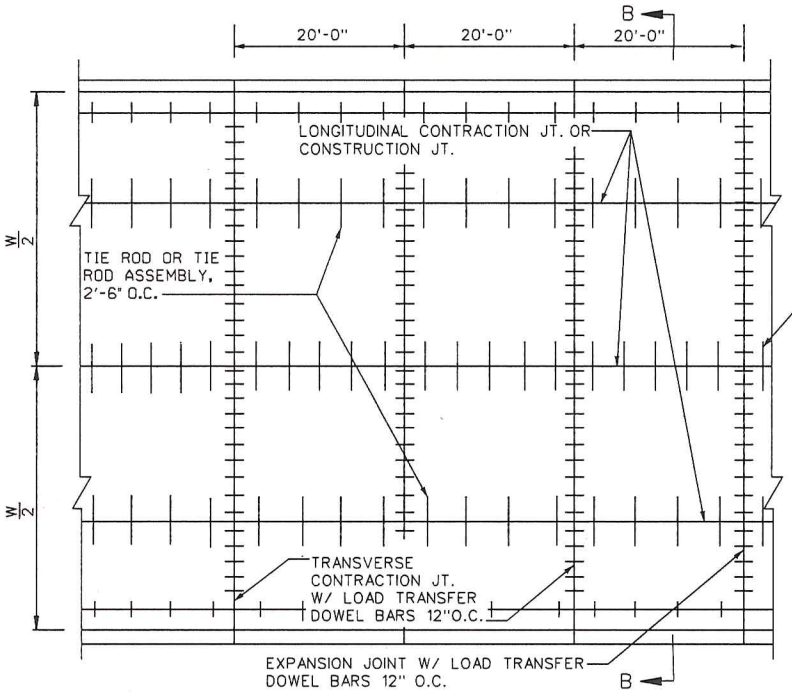

PORTLAND CEMENT CONCRETE PAVEMENT

(WELDED WIRE FABRIC NOT SHOWN)

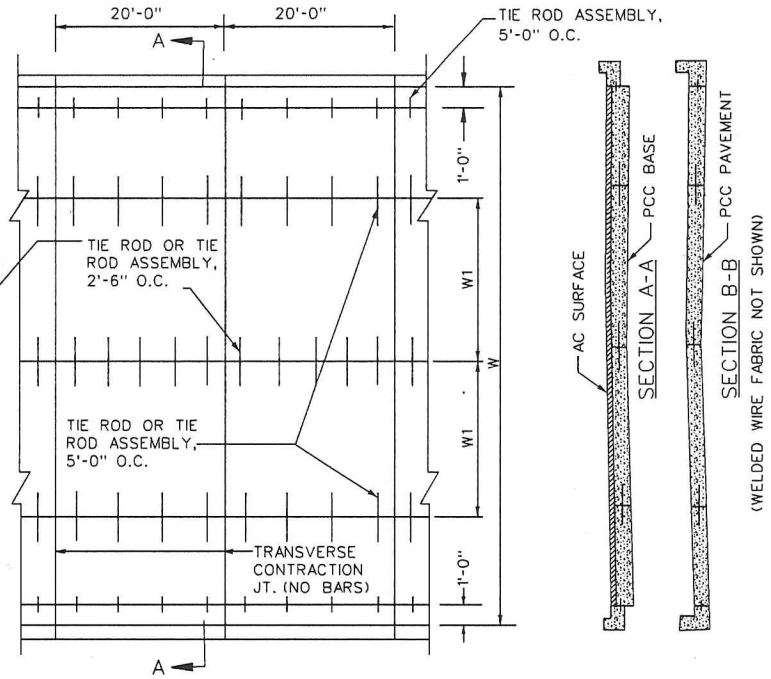

PORTLAND CEMENT CONC. BASE

(WELDED WIRE FABRIC IN P.C.C. BASE NOT SHOWN)

WELDED WIRE FABRIC REINFORCEMENT SCHEDULE
(MINIMUM REQUIREMENT)

SLAB THICKNESS (INCH)	ROADWAY WIDTH			
	EQUAL TO OR LESS THAN 24'-0"		GREATER THAN 24'-0"	
	TYPE	W.T.(#/100S.F.)	TYPE	W.T.(#/100S.F.)
6	6x12 - W4xW4	44	6x12 - W4xW4.5	46
7	6x12 - W4.5xW4	49	6x12 - W4.5xW4.5	51
8	6x12 - W5xW4	51	6x12 - W5xW5	54
9	6x12 - W5.5xW4	54	6x12 - W5.5xW5.5	59
10	6x12 - W6xW4	61	6x12 - W6xW6	69

NOTE: REINFORCEMENT SHALL BE PLACED 2" BELOW SURFACE

EXPANSION JOINTS:

THE DOWEL BARS SHALL BE A DISTANCE OF SIX INCHES (6") FROM THE END OF THE JOINT AND SHALL BE NOT CLOSER THAN SIX INCHES (6") TO A LONGITUDINAL JOINT.

LONGITUDINAL CONTRACTION AND CONSTRUCTION JOINTS:

1/2" Ø DEFORMED TIE RODS 2'-6" LONG OR 9/16" Ø TIE ROD ASSEMBLIES SPACED AS SHOWN ABOVE SHALL BE USED FOR CONTRACTION AND CONSTRUCTION JOINTS RESPECTIVELY. TIE RODS OR TIE ROD ASSEMBLIES SHALL NOT BE PLACED CLOSER THAN 18" TO A TRANSVERSE JOINT.

LANE WIDTH (W1):

SHALL BE PER CONTRACT DRAWINGS.

ISSUED: 8/2015		RECOMMENDED: PROJECT MANAGER	LAYOUT OF JOINTS	d. DISTRICT OF COLUMBIA DEPARTMENT OF TRANSPORTATION
REVISION	APPROVAL			
		APPROVED: Muhammed Khalid CHIEF ENGINEER		DWG. NO. 501.02

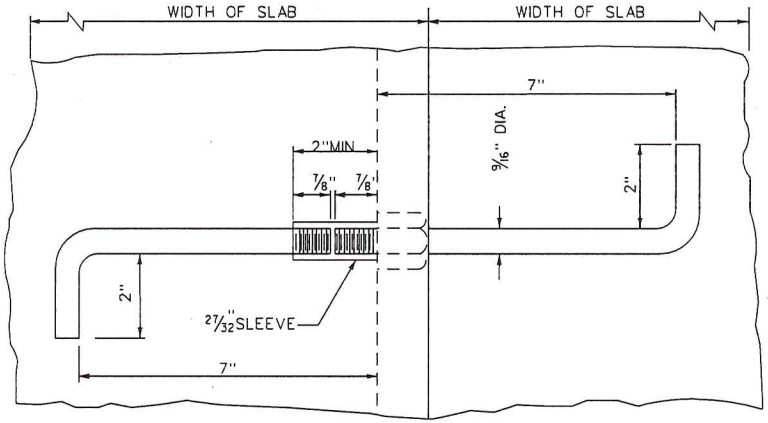

PLAN

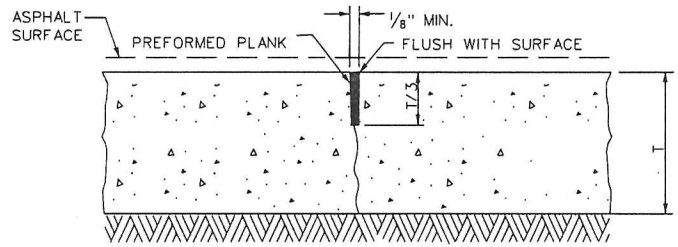

CONTRACTION JOINT FOR PCC BASE

*JOINT SEALER NOT REQUIRED FOR PCC BASE.

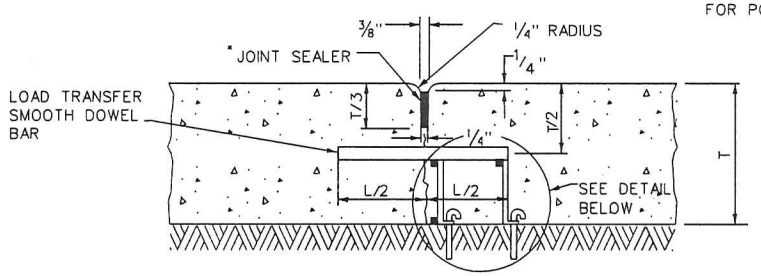

CONTRACTION JOINT FOR PCC PAVEMENT

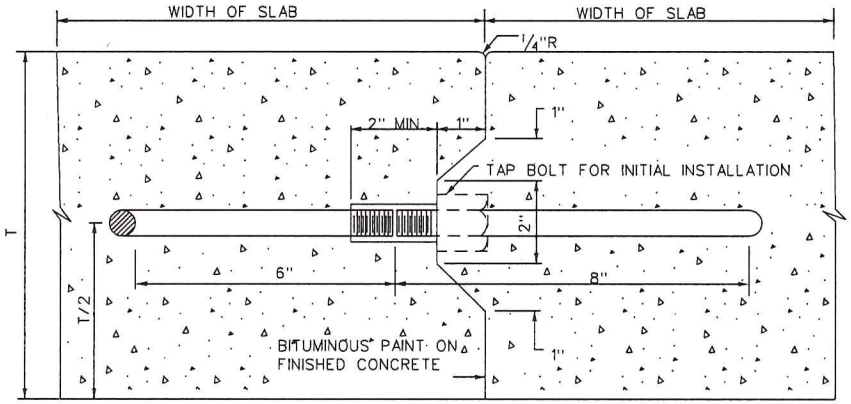

CROSS SECTION

TIE ROD ASSEMBLY
(CONSTRUCTION JOINT)

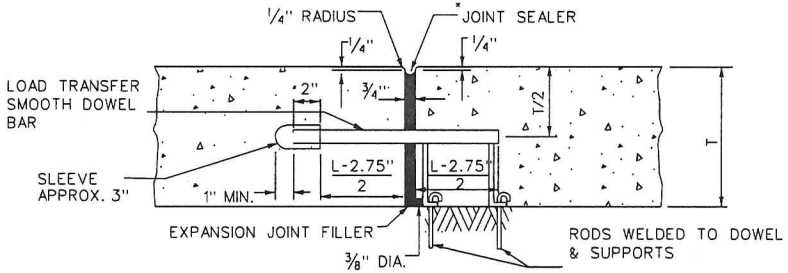

TYPICAL EXPANSION JOINT

(OTHER DESIGNS OF EQUAL STRENGTH MAY BE USED, SUBJECT TO PRIOR APPROVAL)

DIAMETER OF DOWEL BARS

WHEN T = 8" ; 1" DIA.

WHEN T = 9" OR 10" ; 1 1/4" DIA.

LENGTH OF DOWEL BARS

DOWEL BAR ≥ 1" DIA.; L = 12 DIA. ± 2.5"

MIN. TOTAL LENGTH OF 1" DOWEL BAR FOR EXPANSION JOINT = 14 1/2"

TRANSVERSE JOINTS

ISSUED: 8/2015	RECOMMENDED: PROJECT MANAGER	TIE ROD ASSEMBLY AND JOINTS WITH LOAD TRANSFER	d. DISTRICT OF COLUMBIA DEPARTMENT OF TRANSPORTATION
REVISION / APPROVAL	APPROVED: Muhammed Khalid CHIEF ENGINEER		DWG. NO. 501.03

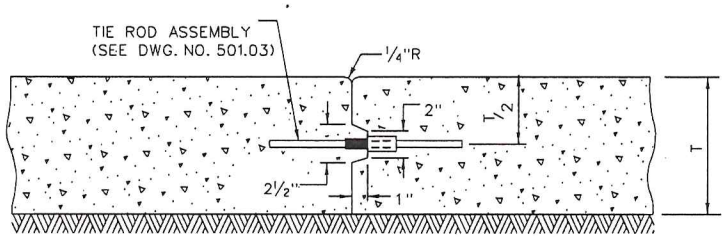

CONSTRUCTION JOINT

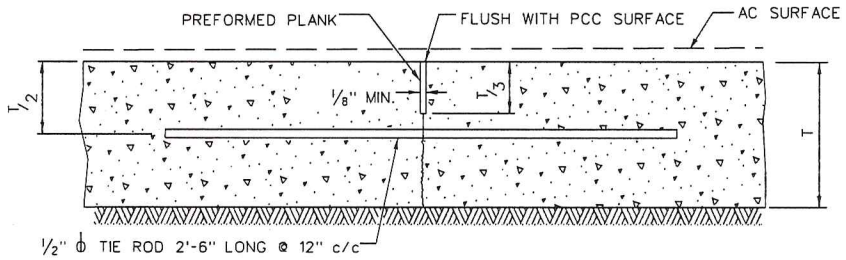

CONTRACTION JOINT FOR PCC BASE

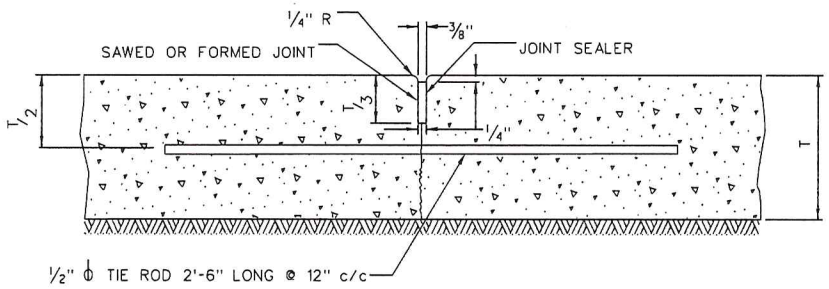

CONTRACTION JOINT FOR PCC PAVEMENT

ISSUED: 8/2015		RECOMMENDED: PROJECT MANAGER	LONGITUDINAL CONTRACTION AND CONSTRUCTION JOINTS	d. DISTRICT OF COLUMBIA DEPARTMENT OF TRANSPORTATION
REVISION	APPROVAL			
		APPROVED: Mohammed Khalid CHIEF ENGINEER		DWG. NO. 501.04

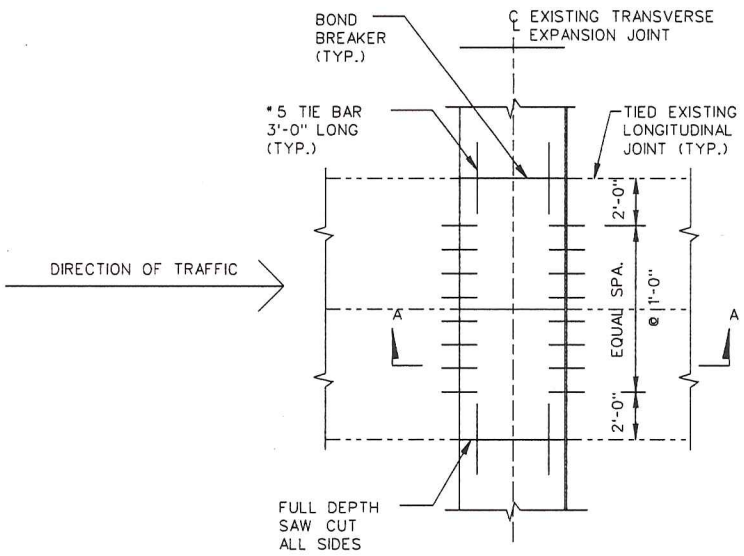

JOINT REPAIR PLAN

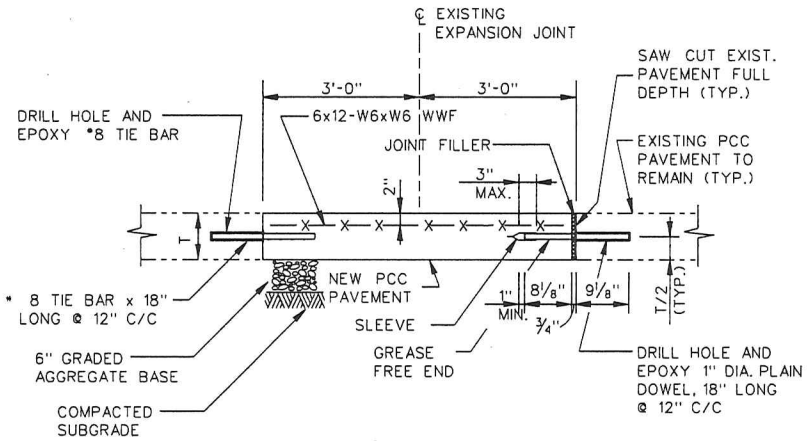

SECTION A-A: EXPANSION JOINT

NOTES:

1. ANCHOR TIE BARS AND DOWELS INTO EXISTING CONCRETE PAVEMENT WITH EPOXY RESIN ADHESIVE.
2. DRILL HOLES FOR THE DOWELS AND TIE BARS TO THE REQUIRED DEPTH USING FRAME MOUNTED DRILLS THAT WILL MAINTAIN THE DRILLS PARALLEL TO PROFILE AND LONGITUDINAL JOINT.
3. FOR DETAILS NOT SHOWN, SEE DRAWING NO. 501.03.

ISSUED: 8/2015	RECOMMENDED: PROJECT MANAGER	JOINT REPAIR EXPANSION JOINT	d. DISTRICT OF COLUMBIA DEPARTMENT OF TRANSPORTATION
REVISION / APPROVAL	APPROVED: Muhammed Khalid CHIEF ENGINEER		DWG. NO. 501.05

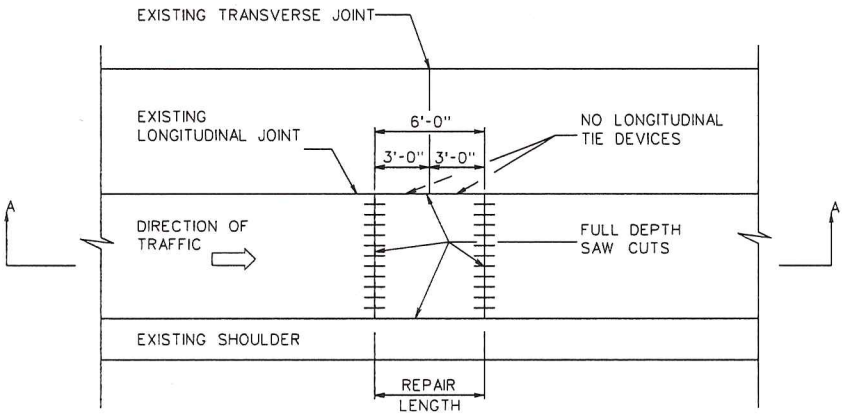

PLAN

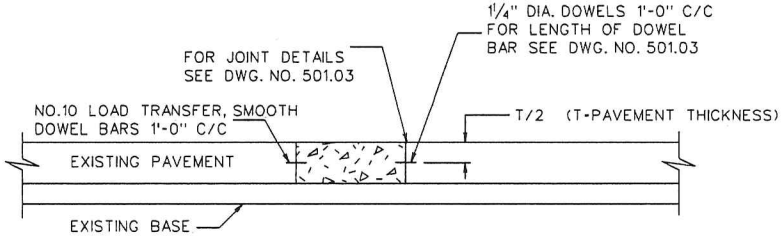

SECTION A-A

TYPE 1

REPAIRS PERFORMED AT AN EXISTING TRANSVERSE JOINT EVEN THOUGH ONLY ONE SIDE NEEDS REPAIR. THE TOTAL REPAIR LENGTH SHALL BE 6' CENTERED ON THE ADJACENT TRANSVERSE JOINT.

REPAIR GUIDELINES:

1. REPAIRS THAT ARE LESS THAN 15 FT. IN LENGTH REQUIRE NO REINFORCEMENT.
2. REPAIR SLABS AND REMAINS OF EXISTING SLABS SHALL NOT BE LESS THAN 6 FT. IN LENGTH.
3. EXISTING DOWELS AND ASSEMBLIES SHALL BE COMPLETELY REMOVED WHEN A REPAIR IS PERFORMED AT A TRANSVERSE JOINT.
4. ALL REPAIRS OFFSET MORE THAN 3 FT. ON EITHER SIDE OF AN EXISTING TRANSVERSE JOINT SHALL BE EXTENDED TO A MINIMUM OF 6 FT., AND DOWEL ASSEMBLIES SHALL BE PLACED ADJACENT TO THE EXISTING TRANSVERSE JOINTS AS SHOWN IN REPAIR METHOD 3 ON DDOT STANDARD DRAWING 501.08.

NOTES:

1. REPAIRS SHALL BE MADE IN ACCORDANCE WITH SECTION 506 OF THE DDOT STANDARD SPECIFICATIONS.
2. REPAIRS SHALL BE MADE USING CONCRETE MEETING THE REQUIREMENTS OF SECTION 501 OF THE DDOT STANDARD SPECIFICATIONS.
3. SUBGRADE PREPARATION SHALL BE IN ACCORDANCE WITH SECTIONS 209 AND 501 OF THE DDOT STANDARD SPECIFICATIONS AND MAY REQUIRE ADDITIONAL MATERIAL TO FACILITATE PLACEMENT OF LOAD TRANSFER DEVICES.
4. HOLES FOR THE DOWELS AND LOAD TRANSFER TIE DEVICES SHALL BE DRILLED SIMULTANEOUSLY TO THE REQUIRED DEPTH USING FRAME MOUNTED DRILLS THAT WILL MAINTAIN THE DRILLS IN A LONGTUDINALLY PARALLEL POSITION.
5. ALL LOAD TRANSFER TIE BARS AND DOWELS SHALL BE EPOXY COATED.

ISSUED: 8/2015		RECOMMENDED: PROJECT MANAGER	PCC PAVEMENT REPAIR TYPE 1	d. DISTRICT OF COLUMBIA DEPARTMENT OF TRANSPORTATION
REVISION	APPROVAL			
		APPROVED: Mohammed Khalid CHIEF ENGINEER		DWG. NO. 501.06

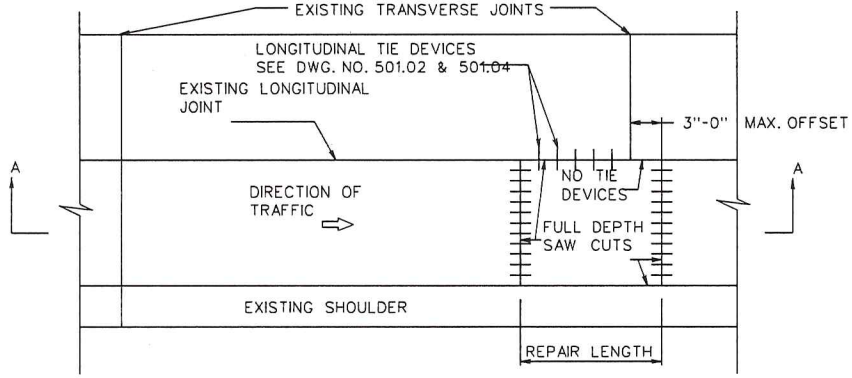

PLAN

TYPE 2

REPAIRS PERFORMED AT AN EXISTING TRANSVERSE JOINT WHEN THE REPAIR EXCEEDS 3 FT. ON ONLY ONE SIDE OF THE JOINT.

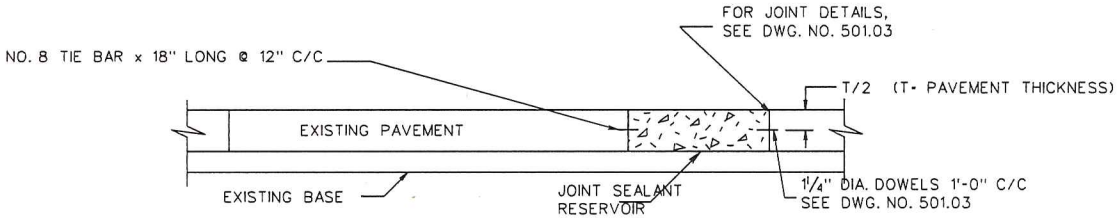

SECTION A-A

REPAIR GUIDELINES:

1. REPAIRS THAT ARE LESS THAN 15 FT. IN LENGTH REQUIRE NO REINFORCEMENT.
2. REPAIR SLABS AND REMAINS OF EXISTING SLABS SHALL NOT BE LESS THAN 6 FT. IN LENGTH.
3. EXISTING DOWELS AND ASSEMBLIES SHALL BE COMPLETELY REMOVED WHEN A REPAIR IS PERFORMED AT A TRANSVERSE JOINT.
4. ALL REPAIRS OFFSET MORE THAN 3 FT. ON EITHER SIDE OF AN EXISTING TRANSVERSE JOINT SHALL BE EXTENDED TO A MINIMUM OF 6 FT., AND DOWEL ASSEMBLIES SHALL BE PLACED ADJACENT TO THE EXISTING TRANSVERSE JOINTS AS SHOWN IN REPAIR METHOD 3 ON DDOT STANDARD DRAWING 501.08.

NOTES:

1. REPAIRS SHALL BE MADE IN ACCORDANCE WITH SECTION 506 OF THE DDOT STANDARD SPECIFICATIONS.
2. REPAIRS SHALL BE MADE USING CONCRETE MEETING THE REQUIREMENTS OF SECTION 501 OF THE DDOT STANDARD SPECIFICATIONS.
3. SUBGRADE PREPARATION SHALL BE IN ACCORDANCE WITH SECTIONS 209 AND 501 OF THE DDOT STANDARD SPECIFICATIONS AND MAY REQUIRE ADDITIONAL MATERIAL TO FACILITATE PLACEMENT OF LOAD TRANSFER DEVICES.
4. HOLES FOR THE DOWELS AND LOAD TRANSFER TIE DEVICES SHALL BE DRILLED SIMULTANEOUSLY TO THE REQUIRED DEPTH USING FRAME MOUNTED DRILLS THAT WILL MAINTAIN THE DRILLS IN A LONGTUDINALLY PARALLEL POSITION.
5. ALL LOAD TRANSFER TIE BARS AND DOWELS SHALL BE EPOXY COATED.

ISSUED: 8/2015		RECOMMENDED: PROJECT MANAGER	PCC PAVEMENT REPAIR TYPE 2	d. DISTRICT OF COLUMBIA DEPARTMENT OF TRANSPORTATION
REVISION	APPROVAL			
		APPROVED: Muhammed Khalid CHIEF ENGINEER		DWG. NO. 501.07

TYPE 3

REPAIRS EXCEEDING 3 FT. ON BOTH SIDES OF AN EXISTING TRANSVERSE JOINT.

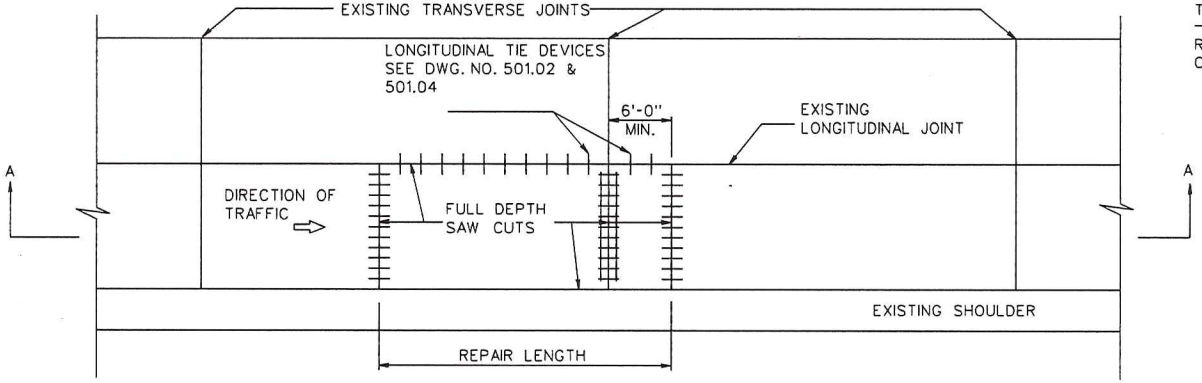

PLAN

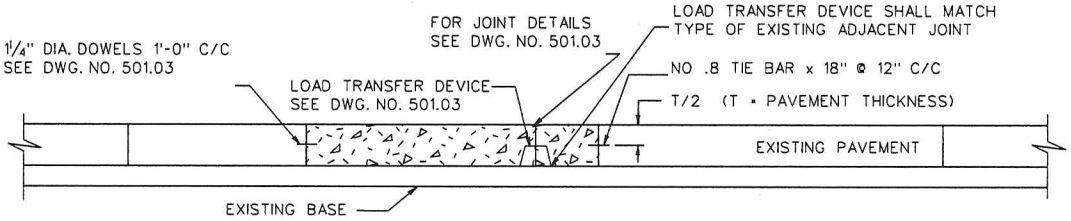

SECTION A-A

REPAIR GUIDELINES:

1. REPAIRS THAT ARE LESS THAN 15 FT. IN LENGTH REQUIRE NO REINFORCEMENT.
2. REPAIR SLABS AND REMAINS OF EXISTING SLABS SHALL NOT BE LESS THAN 6 FT. IN LENGTH.
3. EXISTING DOWELS AND ASSEMBLIES SHALL BE COMPLETELY REMOVED WHEN A REPAIR IS PERFORMED AT A TRANSVERSE JOINT.
4. ALL REPAIRS OFFSET MORE THAN 3 FT. ON EITHER SIDE OF AN EXISTING TRANSVERSE JOINT SHALL BE EXTENDED TO A MINIMUM OF 6 FT., AND DOWEL ASSEMBLIES SHALL BE PLACED ADJACENT TO THE EXISTING TRANSVERSE JOINTS.

NOTES:

1. REPAIRS SHALL BE MADE IN ACCORDANCE WITH SECTION 506 OF THE DDOT STANDARD SPECIFICATIONS.
2. REPAIRS SHALL BE MADE USING CONCRETE MEETING THE REQUIREMENTS OF SECTION 501 OF THE DDOT STANDARD SPECIFICATIONS.
3. SUBGRADE PREPARATION SHALL BE IN ACCORDANCE WITH SECTIONS 209 AND 501 OF THE DDOT STANDARD SPECIFICATIONS AND MAY REQUIRE ADDITIONAL MATERIAL TO FACILITATE PLACEMENT OF LOAD TRANSFER DEVICES.
4. HOLES FOR THE DOWELS AND LOAD TRANSFER TIE DEVICES SHALL BE DRILLED SIMULTANEOUSLY TO THE REQUIRED DEPTH USING FRAME MOUNTED DRILLS THAT WILL MAINTAIN THE DRILLS IN A LONGTUDINALLY PARALLEL POSITION.
5. ALL LOAD TRANSFER TIE BARS AND DOWELS SHALL BE EPOXY COATED.

ISSUED: 8/2015		RECOMMENDED: PROJECT MANAGER	PCC PAVEMENT REPAIR TYPE 3	d. DISTRICT OF COLUMBIA DEPARTMENT OF TRANSPORTATION
REVISION	APPROVAL			
		APPROVED: Muhammed Khalid CHIEF ENGINEER		DWG. NO. 501.08

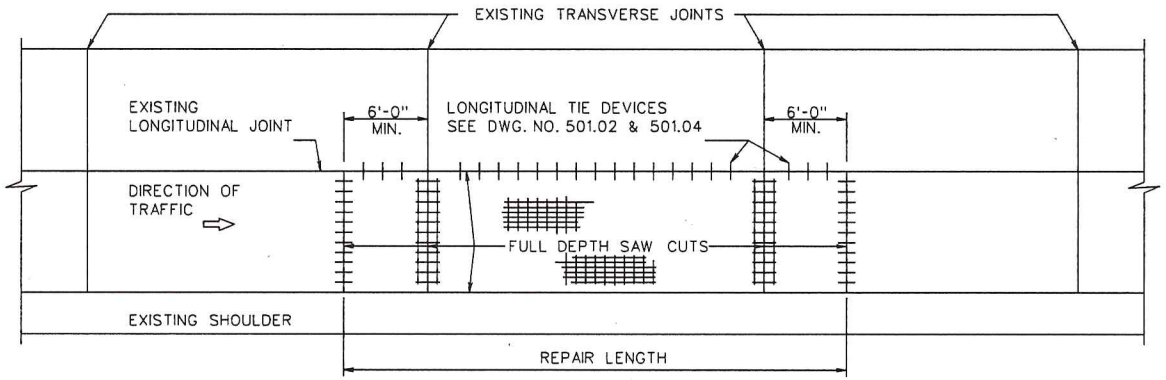

TYPE 4

BETWEEN TWO TRANSVERSE JOINTS.

PLAN

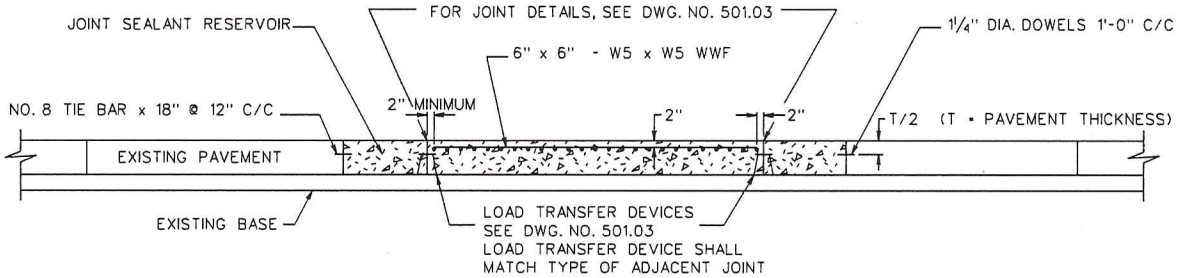

SECTION A-A

REPAIR GUIDELINES:

1. REPAIRS THAT ARE LESS THAN 15 FT. IN LENGTH REQUIRE NO REINFORCEMENT.
2. REPAIR SLABS AND REMAINS OF EXISTING SLABS SHALL NOT BE LESS THAN 6 FT. IN LENGTH.
3. EXISTING DOWELS AND ASSEMBLIES SHALL BE COMPLETELY REMOVED WHEN A REPAIR IS PERFORMED AT A TRANSVERSE JOINT.
4. DEPTH OF THE COVER CAN RANGE FROM 2" - T/2. MINIMUM COVER SHOULD BE 2"

NOTES:

1. REPAIRS SHALL BE MADE IN ACCORDANCE WITH SECTION 506 OF THE DDOT STANDARD SPECIFICATIONS.
2. REPAIRS SHALL BE MADE USING CONCRETE MEETING THE REQUIREMENTS OF SECTION 501 OF THE DDOT STANDARD SPECIFICATIONS.
3. SUBGRADE PREPARATION SHALL BE IN ACCORDANCE WITH SECTIONS 209 AND 501 OF THE DDOT STANDARD SPECIFICATIONS AND MAY REQUIRE ADDITIONAL MATERIAL TO FACILITATE PLACEMENT OF LOAD TRANSFER DEVICES.
4. HOLES FOR THE DOWELS AND LOAD TRANSFER TIE DEVICES SHALL BE DRILLED SIMULTANEOUSLY TO THE REQUIRED DEPTH USING FRAME MOUNTED DRILLS THAT WILL MAINTAIN THE DRILLS IN A LONGTUDINALLY PARALLEL POSITION.
5. ALL LOAD TRANSFER TIE BARS AND DOWELS SHALL BE EPOXY COATED.

ISSUED: 8/2015		RECOMMENDED: PROJECT MANAGER	PCC PAVEMENT REPAIR TYPE 4	d. DISTRICT OF COLUMBIA DEPARTMENT OF TRANSPORTATION
REVISION	APPROVAL	APPROVED: Muhammed Khalid CHIEF ENGINEER		DWG. NO. 501.09

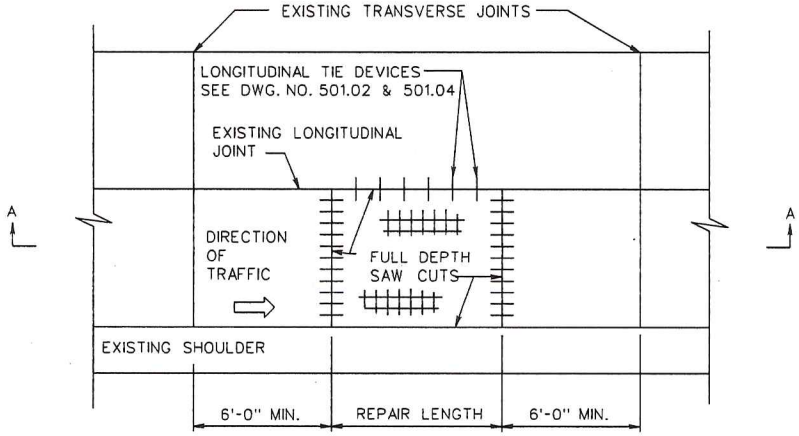

PLAN

TYPE 5

REPAIRS PERFORMED AT MID SLAB OR A MINIMUM OF 6 FT. FROM AN EXISTING TRANSVERSE JOINT.

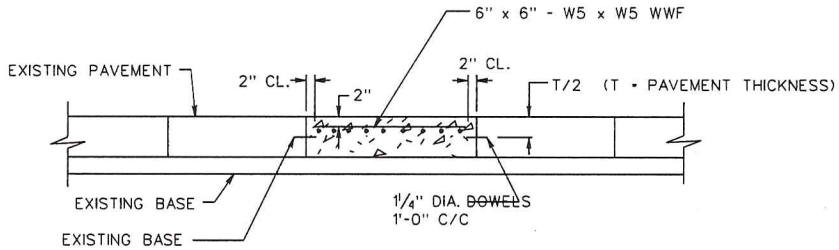

SECTION A-A

REPAIR GUIDELINES:

1. REPAIRS THAT ARE LESS THAN 15 FT. IN LENGTH REQUIRE NO REINFORCEMENT.
2. REPAIR SLABS AND REMAINS OF EXISTING SLABS SHALL NOT BE LESS THAN 6 FT. IN LENGTH.
3. EXISTING DOWELS AND ASSEMBLIES SHALL BE COMPLETELY REMOVED WHEN A REPAIR IS PERFORMED AT A TRANSVERSE JOINT.

NOTES:

1. THE ABOVE JOINT REPAIR DETAIL MAY BE USED FOR FULL DEPTH CRACKED PAVEMENT. THE EXTENT OF THE REPAIR SHALL BE DETERMINED IN THE FIELD BY THE ENGINEER.
2. REPAIRS SHALL BE MADE IN ACCORDANCE WITH SECTION 506 OF THE DDOT STANDARD SPECIFICATIONS.
3. REPAIRS SHALL BE MADE USING CONCRETE MEETING THE REQUIREMENTS OF SECTION 501 OF THE DDOT STANDARD SPECIFICATIONS.
4. SUBGRADE PREPARATION SHALL BE IN ACCORDANCE WITH SECTIONS 209 AND 501 OF THE DDOT STANDARD SPECIFICATIONS AND MAY REQUIRE ADDITIONAL MATERIAL TO FACILITATE PLACEMENT OF LOAD TRANSFER DEVICES.
5. HOLES FOR THE DOWELS AND LOAD TRANSFER TIE DEVICES SHALL BE DRILLED SIMULTANEOUSLY TO THE REQUIRED DEPTH USING FRAME MOUNTED DRILLS THAT WILL MAINTAIN THE DRILLS IN A LONGTUDINALLY PARALLEL POSITION.
6. ALL LOAD TRANSFER TIE BARS AND DOWELS SHALL BE EPOXY COATED.

ISSUED: 8/2015		RECOMMENDED: PROJECT MANAGER	PCC PAVEMENT REPAIR TYPE 5	d. DISTRICT OF COLUMBIA DEPARTMENT OF TRANSPORTATION
REVISION	APPROVAL			
		APPROVED: Muhammed Khalid CHIEF ENGINEER		DWG. NO. 501.10

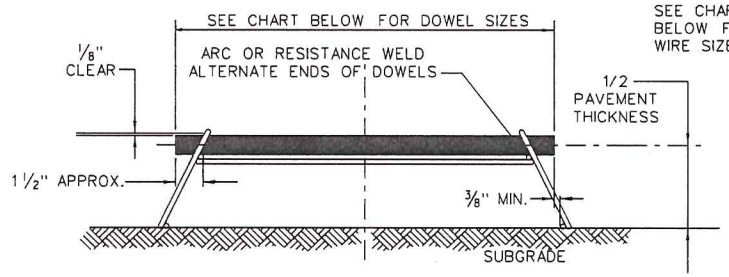

SECTION A-A

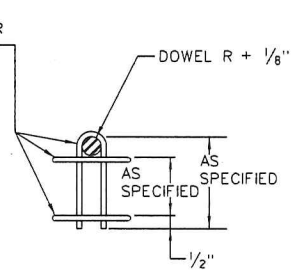

U-LEG DETAIL

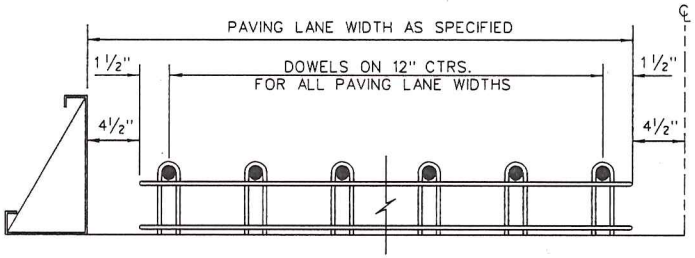

SECTION B-B

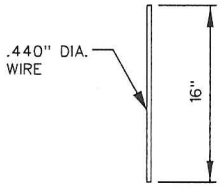

PIN DETAIL

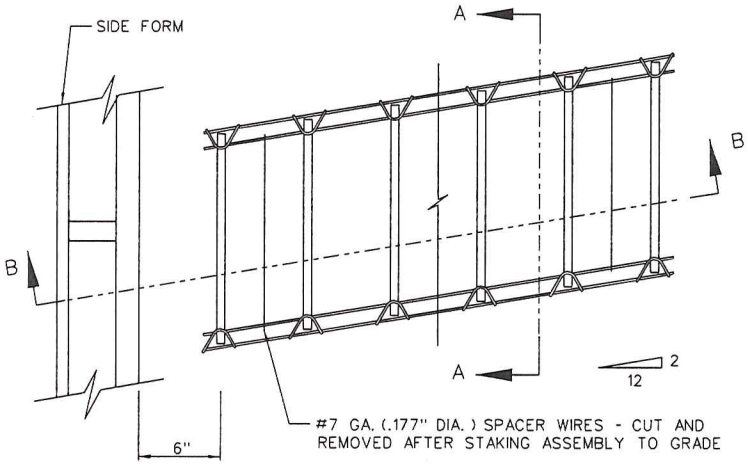

PLAN VIEW

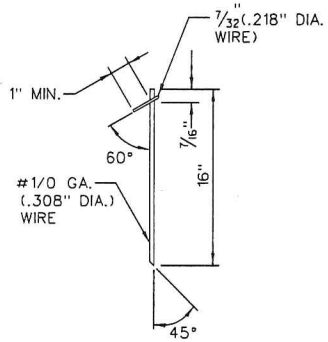

ALTERNATE STAKE DETAIL

NOTES:

1. DOWELS TO BE BUILT STEEL BARS PER AASHTO M 31, GRADE 60.
2. DOWELS ARE TO BE FUSION-BONDED PER AASHTO M 254.
3. DOWELS ARE TO BE SAW CUT AND DEBURRED.
4. BONDBREAKER - TECTYL 506 SHOP APPLIED FULL DEPTH.
5. WIRE SIZES SHOWN ARE MINIMUM REQUIRED.
6. WIRE - CARBON STEEL PER ASTM A 510 GR. 1008 SIZES SHOWN ARE MINIMUM REQUIRED.
7. STAKES ARE TO BE APPLIED AT THE WORKING END OF DOWELS ONLY.
8. TOLERANCES +/-1/8" UNLESS OTHERWISE SPECIFIED.
9. CENTERLINE OF INDIVIDUAL DOWELS SHALL BE PARALLEL TO SUBGRADE AND ALL OTHER DOWELS IN ASSEMBLY WITHIN +/-1/4" IN 18".
10. MATERIALS AND CONSTRUCTION SHALL MEET THE REQUIREMENTS OF DDOT STANDARD SPECIFICATIONS.
11. DEVICE SHALL BE COATED WITH A WAXLIKE OR TECTYL 506 COATING PRIOR TO SHIPPING TO ENSURE APPROPRIATE FUNCTION OF THE DEVICE IN PLACE.

LANE WIDTH	OVERALL UNIT LENGTH	NUMBER OF DOWELS
10'	9'-3"	10
11'	10'-3"	11
12'	11'-3"	12
13'	12'-3"	13
14'	13'-3"	14
15'	14'-3"	15

PAVEMENT THICKNESS	DOWEL DIAMETER	WIRE DIA.	
		TOP & BOTTOM	LEG
10" OR <	1 1/4"	.331"	.331"
>10"	1 1/2"	.362"	.362"

ISSUED: 8/2015	RECOMMENDED: PROJECT MANAGER	LOAD TRANSFER ASSEMBLY EXPANSION JOINT	d. DISTRICT OF COLUMBIA DEPARTMENT OF TRANSPORTATION
REVISION / APPROVAL	APPROVED: Muhammed Khalid CHIEF ENGINEER		DWG. NO. 501.11

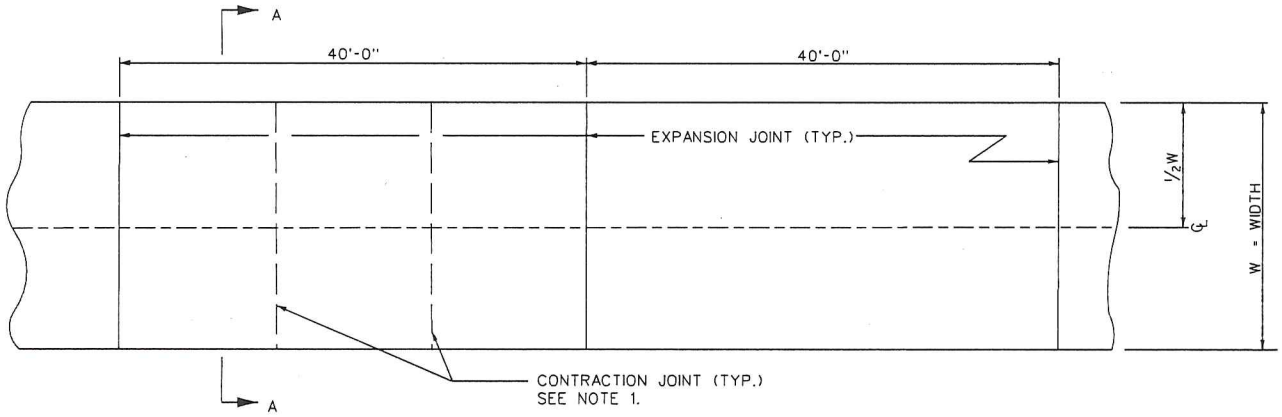

PLAN

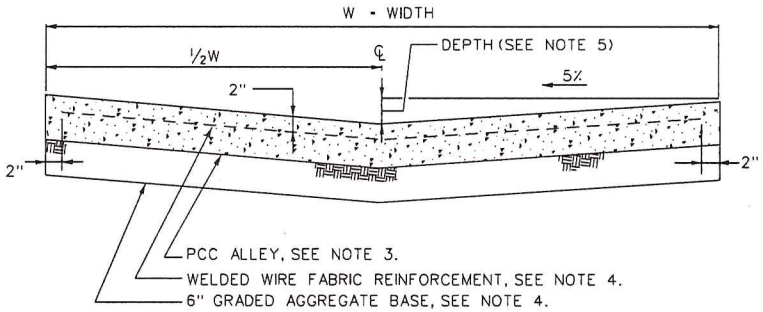

SECTION A-A

NOTES:

1. PLACE TRANSVERSE EXPANSION JOINTS AT APPROX. 40 FT. INTERVALS AND AT END OF ALLEY WHICH ABUTS CONCRETE PAVING. PLACE CONTRACTION JOINTS AT APPROX. 13 FT. INTERVALS. THESE CONTRACTION JOINTS SHALL CONSIST OF A GROOVE FORMED WITH A JOINTING TOOL WITH A BLADE PROJECTION 1/3 THE DEPTH OF PAVING. AS AN ALTERNATE METHOD, SAWN JOINTS WILL BE PERMITTED AND WILL BE DONE IN ACCORDANCE WITH SECTION 501.14(D) OF THE DDOT STANDARD SPECIFICATIONS.
2. PLACE LONGITUDINAL EXPANSION JOINTS BETWEEN THE ALLEY SLAB AND PERMANENT STRUCTURES ALONG THE SIDES OF ALLEY.
3. DEPTH OF ALLEY PAVING IS 7"-8" IN COMMERCIAL AREAS AND 6" IN RESIDENTIAL AREAS.
4. WIRE FABRIC REINFORCEMENT AND GRADED AGGREGATE BASE SHALL BE AS REQUIRED BY THE CONTRACT DOCUMENTS. WIRE FABRIC SHALL NOT EXTEND ACROSS EXPANSION JOINTS.
5. STANDARD DEPTH (DISH) FOR ALLEY IS 4" - 6". MAX. DEPTH IS 11". MIN. DEPTH IS 1". DEPTHS LESS THAN 4" OR GREATER THAN 6" MUST BE APPROVED BY THE CHIEF ENGINEER.
6. ALLEY TO BE BUILT TO APPROVED ALLEY GRADE ACCORDING TO DDOT SPECIFICATIONS.

ISSUED: 8/2015		RECOMMENDED: PROJECT MANAGER	PCC ALLEY	d. DISTRICT OF COLUMBIA DEPARTMENT OF TRANSPORTATION
REVISION	APPROVAL			
		APPROVED: Muhammed Khalid CHIEF ENGINEER		DWG. NO. 503.01

NOTE: CONCRETE FOR ALLEY APRON & CURB TO BE POURED MONOLITHICALLY

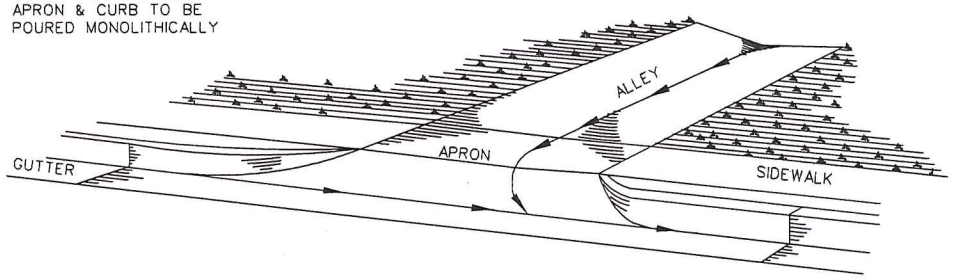

ALLEY ENTRANCE

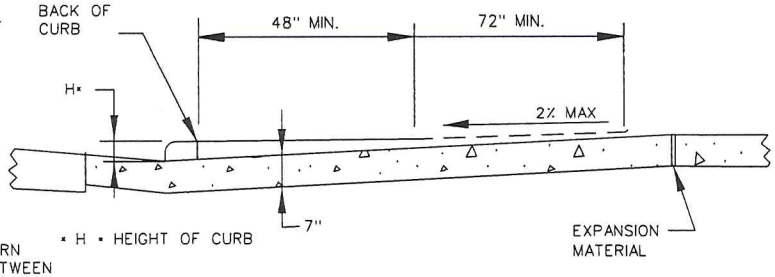

SECTION A-A

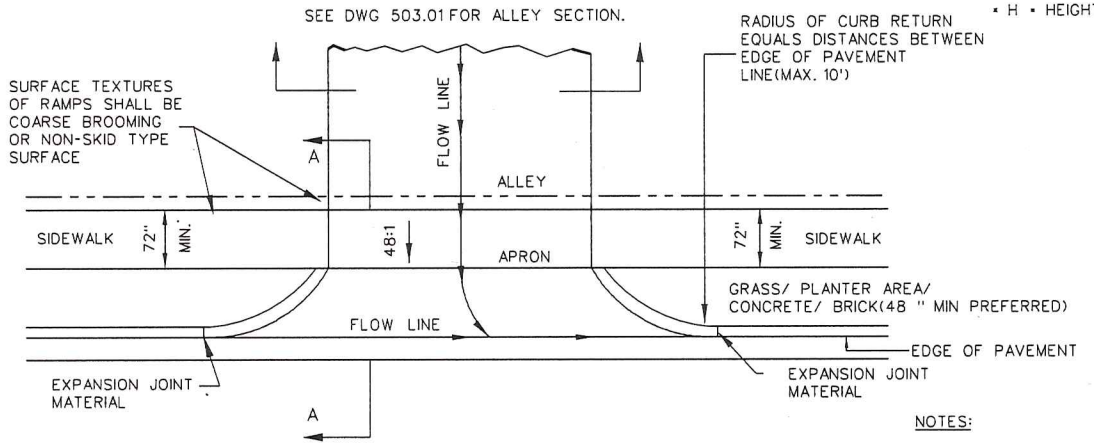

PLAN

NOTES:

1. DRIVEWAY RADIUS = 6 FT. (UNLESS OTHERWISE SHOWN ON CONTRACT PLANS).
2. ALLEY RADIUS = 10 FT. (UNLESS OTHERWISE SHOWN ON CONTRACT PLANS).
3. 7 IN. PCC USED (UNLESS OTHERWISE SHOWN ON CONTRACT PLANS).
4. USE GRANITE CURB RETURNS WHERE EXISTING. SEE GRANITE CURB DETAILS WHEN USED.
5. NO TRANSVERSE SLOPE ON THE RAMP OR SIDEWALK SHALL EXCEED 12:1 IN THE DIRECTION OF THE TRAVEL.
6. MATERIAL THORUGHOUT THE SIDEWALK SHALL BE FIRM, STABLE AND SLIP RESISTANT.
7. SEE DWG 503.01 FOR ALLEY SECTION.
8. IF 6 FEET SIDEWALK WIDTH IS NOT ACHIEVABLE, THE MIN. WIDTH ALLOWED IS 4 FEET.

ISSUED: 8/2015	RECOMMENDED: PROJECT MANAGER	ALLEY-DRIVEWAY ENTRANCE WITH CURB RETURNS TYPE "A"	d. DISTRICT OF COLUMBIA DEPARTMENT OF TRANSPORTATION
REVISION / APPROVAL	APPROVED: Muhammed Khalid CHIEF ENGINEER		DWG. NO. 504.01

NOTE: CONCRETE FOR ALLEY APRON & CURB TO BE POURED MONOLITHICALLY

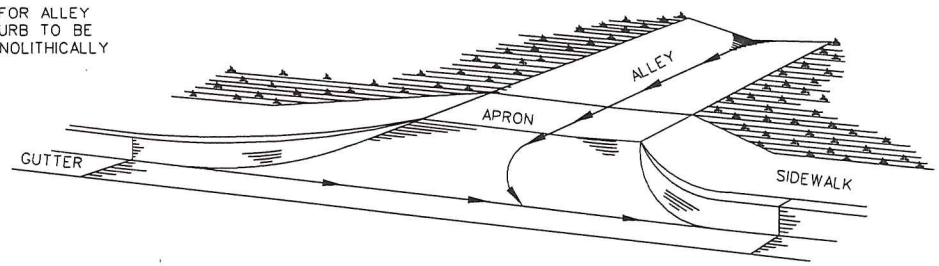

ALLEY ENTRANCE

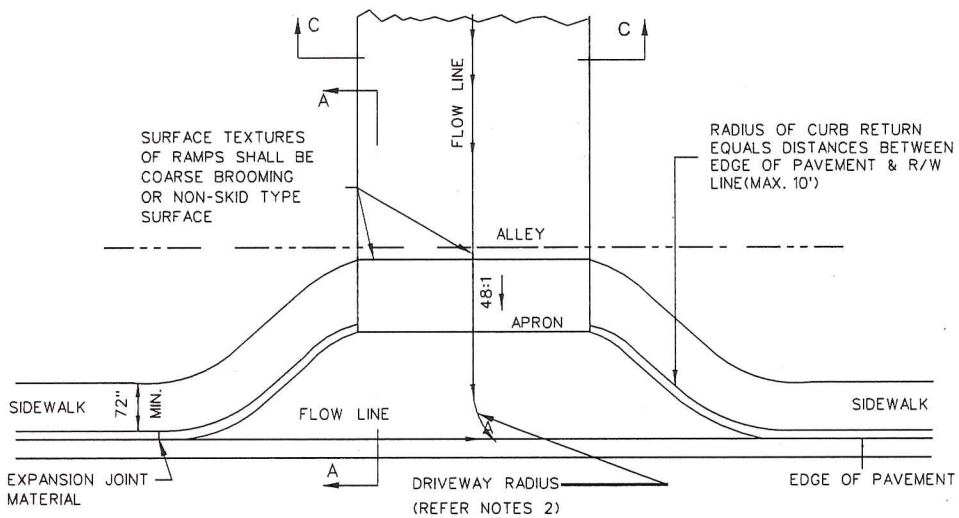

PLAN

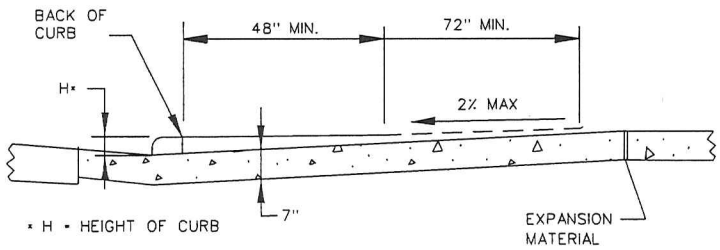

SECTION A-A

NOTES:

1. REQUIRES DDOT ADA CORORDINATOR APPROVAL.
2. DRIVEWAY RADIUS = 6 FT. (UNLESS OTHERWISE SHOWN ON CONTRACT PLANS).
3. ALLEY RADIUS = 10 FT. (UNLESS OTHERWISE SHOWN ON CONTRACT PLANS).
4. PCC OF DEPTH 7 IN. SHOULD BE USED (UNLESS OTHERWISE SHOWN ON CONTRACT PLANS).
5. USE GRANITE CURB RETURNS WHERE EXISTING. SEE GRANITE CURB DETAILS WHEN USED.
6. NO TRANSVERSE SLOPE ON THE RAMP OR SIDEWALK SHALL EXCEED 12:1 IN THE DIRECTION OF THE TRAVEL.
7. MATERIAL THORUGHOUT THE SIDEWALK SHALL BE FIRM, STABLE AND SLIP RESISTANT.
8. SEE DWG 503.01 FOR ALLEY SECTION.
9. IF 6 FEET SIDEWALK WIDTH IS NOT ACHIEVABLE, THE MIN. WIDTH ALLOWED IS 4 FEET.

ISSUED: 8/2015	RECOMMENDED: PROJECT MANAGER	ALLEY-DRIVEWAY ENTRANCE WITH CURB RETURNS TYPE "B"	d. DISTRICT OF COLUMBIA DEPARTMENT OF TRANSPORTATION
REVISION / APPROVAL	APPROVED: Muhammed Khalid CHIEF ENGINEER		DWG. NO. 504.02

NOTE: CONCRETE FOR ALLEY APRON & CURB TO BE POURED MONOLITHICALLY

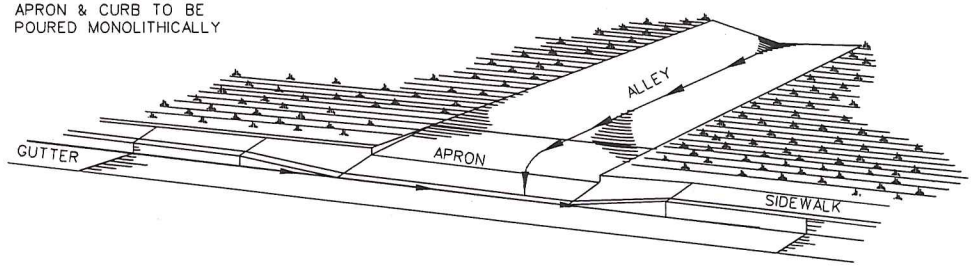

ALLEY ENTRANCE

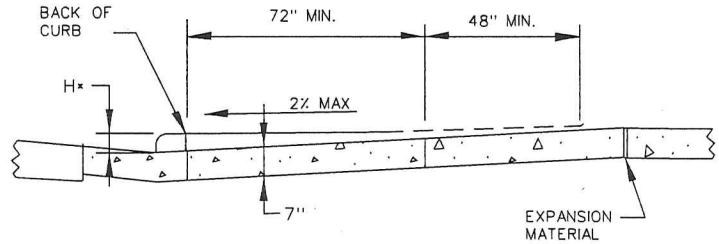

* H = HEIGHT OF CURB

SECTION A-A

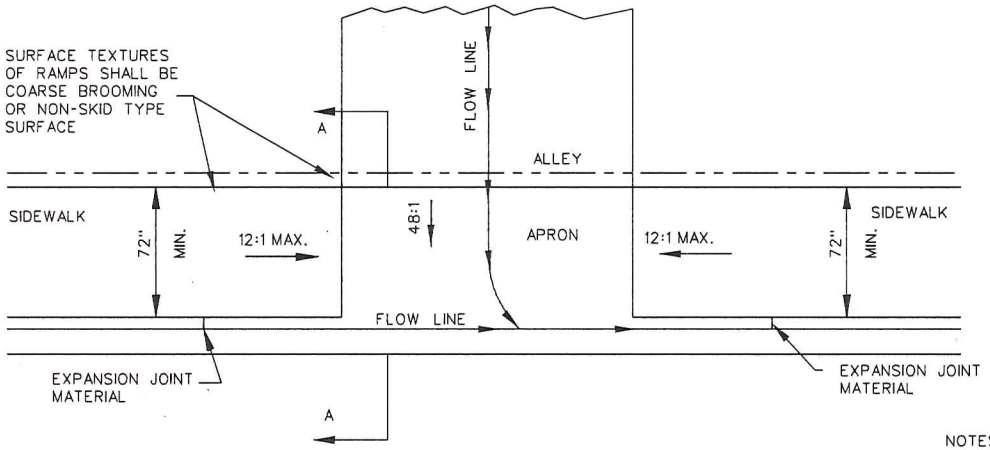

PLAN

NOTES:

1. DRIVEWAY RADIUS = 6 FT. (UNLESS OTHERWISE SHOWN ON CONTRACT PLANS).
2. ALLEY RADIUS = 10 FT. (UNLESS OTHERWISE SHOWN ON CONTRACT PLANS).
3. PCC DEPTH OF 7 IN. SHOULD BE USED (UNLESS OTHERWISE SHOWN ON CONTRACT PLANS).
4. USE GRANITE CURB RETURNS WHERE EXISTING. SEE GRANITE CURB DETAILS WHEN USED.
5. NO TRANSVERSE SLOPE ON THE RAMP OR SIDEWALK SHALL EXCEED 12:1 IN THE DIRECTION OF THE TRAVEL.
6. MATERIAL THROUGHOUT THE SIDEWALK SHALL BE FIRM, STABLE AND SLIP RESISTANT.
7. REQUIRES DDOT ADA COORDINATOR APPROVAL.
8. SEE DWG 503.01 FOR ALLEY SECTION.
9. IF 6 FEET SIDEWALK WIDTH IS NOT ACHIEVABLE, THE MIN. WIDTH ALLOWED IS 4 FEET.

ISSUED: 8/2015	RECOMMENDED: PROJECT MANAGER	ALLEY-DRIVEWAY ENTRANCE WITH CURB RETURNS TYPE "C"	d. DISTRICT OF COLUMBIA DEPARTMENT OF TRANSPORTATION
REVISION / APPROVAL	APPROVED: Muhammed Khalid CHIEF ENGINEER		DWG. NO. 504.03

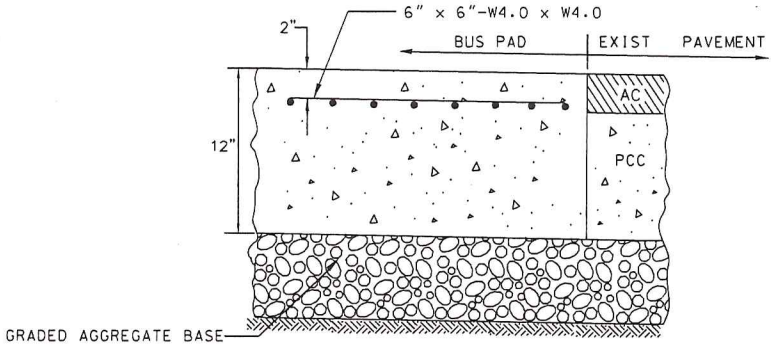

SECTION - 12" REINFORCED PCC BUS PAD
WITH COMPOSITE PAVEMENT

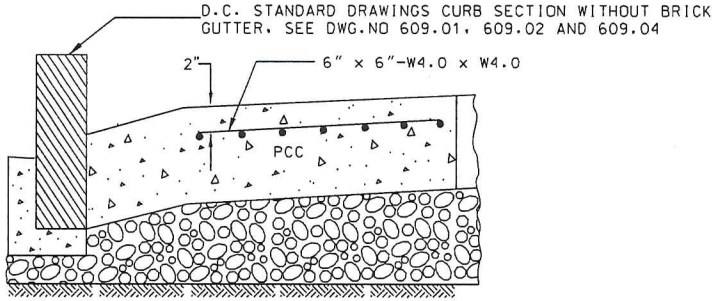

SECTION - BUS PAD WITH PCC GUTTER
AND OR PCC CURB

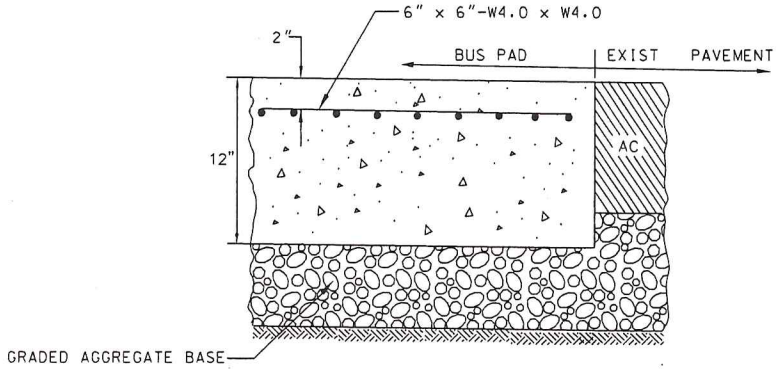

SECTION - PCC BUS PAD
WITH FLEXIBLE PAVEMENT

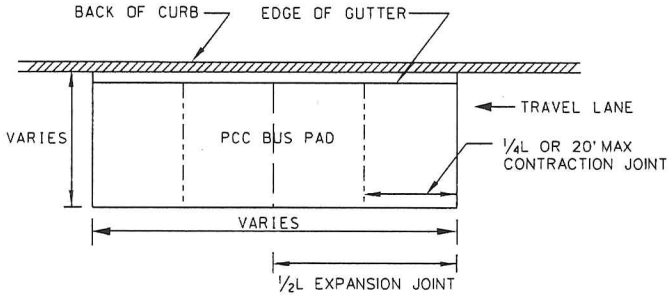

PLAN

NOTE:

1. THE LENGTH OF BUS PAD IS 90' FOR ARTICULATED BUSES AND 65' FOR STANDARD BUSES
2. WIDTH DEPENDS ON ROADWAY CONFIGURATION
3. FOR JOINT DETAIL IN PCC PAVEMENT, SEE DDOT STANDARD DWG.501.03

ISSUED: 8/2015	RECOMMENDED: PROJECT MANAGER	PCC BUS PAD	d. DISTRICT OF COLUMBIA DEPARTMENT OF TRANSPORTATION
REVISION / APPROVAL	APPROVED: Muhammed Khalid CHIEF ENGINEER		DWG. NO. 506.01

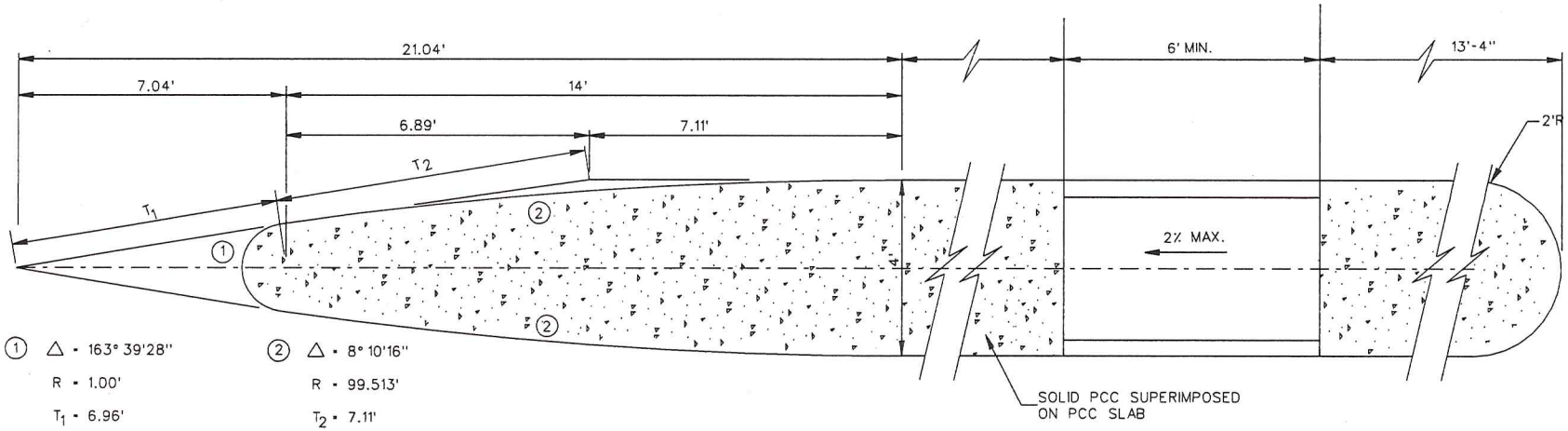

① △ = 163° 39'28"
R = 1.00'
T_1 = 6.96'
L = 2.86'

② △ = 8° 10'16"
R = 99.513'
T_2 = 7.11'
L = 14.19'

PLAN - 4' WIDE

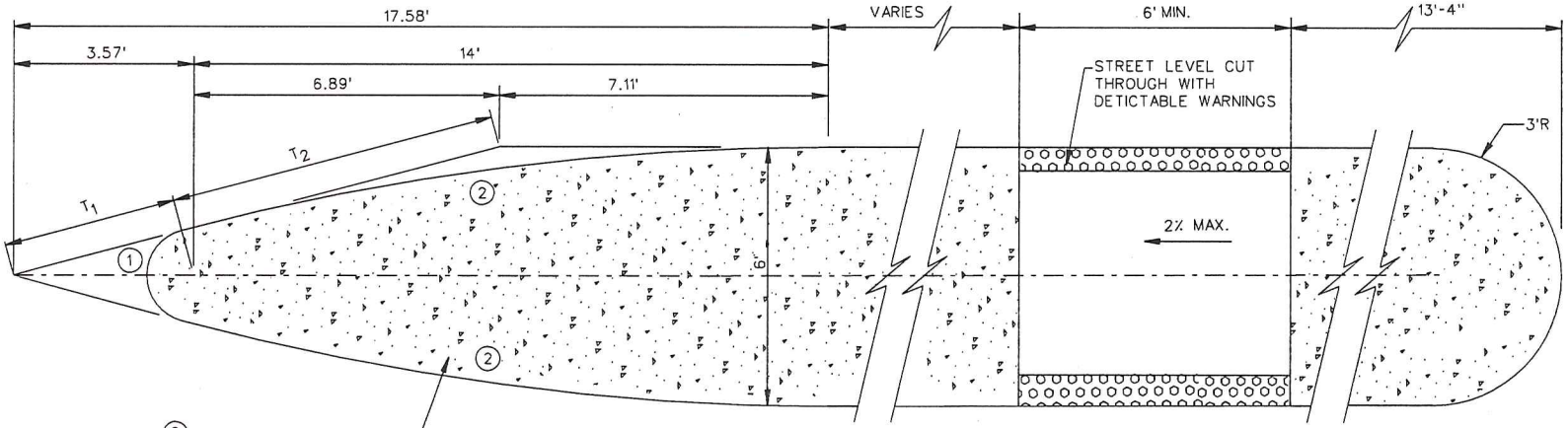

① △ = 147° 28'48"
R = 1.00'
T_1 = 3.43'
L = 2.57'

② △ = 16° 15'36"
R = 50.99'
T_2 = 7.28'
L = 14.47'

PLAN - 6' MIN. WIDE

NOTES:

1. WHERE ISLANDS EXTEND ACROSS CROSSWALKS, CURB CUTS FOR HANDICAPPED SHALL BE CONSTRUCTED AS PART OF THE ISLANDS.
2. ALL DIMENSIONS SHOWN ON THIS DRAWING ARE APPLICABLE TO A 90° CROSSING INTERSECTION. THESE DIMENSIONS SHALL BE ADJUSTED ACCORDINGLY FOR A SKEW CROSSING INTERSECTION.

ISSUED: 8/2015		RECOMMENDED: PROJECT MANAGER	DIRECTIONAL ISLANDS	d. DISTRICT OF COLUMBIA DEPARTMENT OF TRANSPORTATION
REVISION	APPROVAL	APPROVED: Muhammed Khalid CHIEF ENGINEER		DWG. NO. 506.02

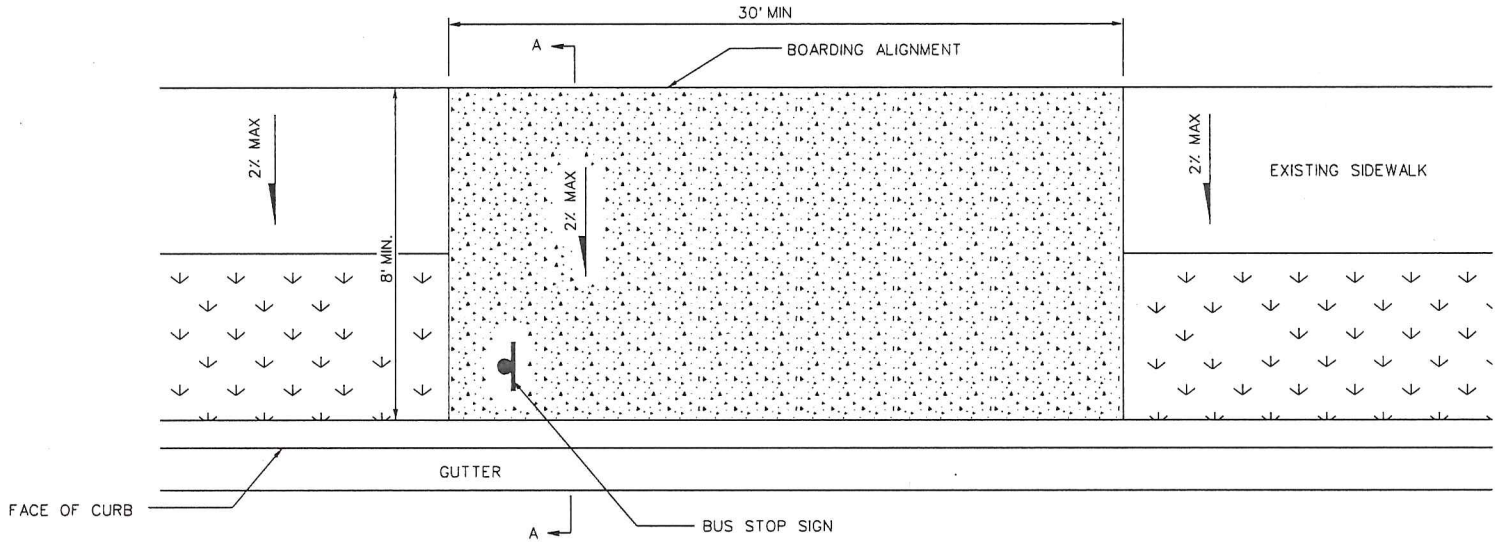

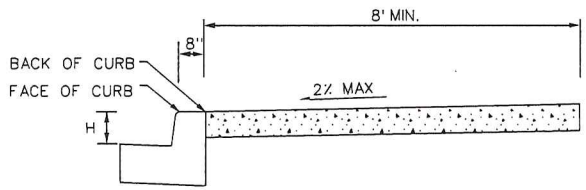

* H = HEIGHT OF CURB IN INCHES

SECTION A-A

NOTES:

1. ALL RAMPS SHALL CONFORM TO DDOT BEST PRACTICES AND THE LATEST AMERICANS WITH DISABILITIES ACT (ADA) CRITERIA.
2. THE SURFACE OF THE RAMP SHALL BE BROOM FINISHED (STEEL BRISTLE).

ISSUED: 8/2015		RECOMMENDED: PROJECT MANAGER	BUS STOP AND BOARDING ALIGNMENT	d. DISTRICT OF COLUMBIA DEPARTMENT OF TRANSPORTATION
REVISION	APPROVAL			
		APPROVED: Muhammed Khalid CHIEF ENGINEER		DWG. NO. 506.03