District Department of Transportation

Ward Circle NW

Traffic Operations and Safety Analysis Study Report

Submitted to:
District Department of Transportation
Transportation Operations Administration

Submitted by:
Precision Systems Inc.
In association with Parsons Brinckerhoff, P.C.

November 17, 2014

District Department of Transportation

Ward Circle NW

Traffic Operations and Safety Analysis Study Report

Table of Contents

1.0 Background 6

1.1. Study Area 6

1.2. Existing Traffic Operations 8

1.3. Operational Issues 9

2.0 Previously Reviewed Studies 11

2.1. American University Master Plan, Transportation Report (March 2011) 11

2.2. Nebraska Avenue Complex – Homeland Security 14

2.3. Advisory Neighborhood Commission 3D AU Master Plan Traffic Report 15

2.4. Westover Place 16

2.5. Ward Circle Traffic Safety Issues 17

2.6. Rock Creek West Livability Study 17

3.0 Existing Traffic Conditions 19

3.1. Traffic Volumes 19

3.2. Transit Operations 22

3.3. Bicycle Volumes 23

3.4. Pedestrian Volumes 24

3.5. Signage and Pavement Markings 26

3.6. Traffic Safety 26

3.7. Existing Traffic Operations Analysis 30

4.0 Alternatives Development 36

4.1. Alternative 1 - Roundabout 36

4.2. Alternative 2 - Bi-furcated Intersection 37

4.3. Alternative 3 - 4-leg Intersection 39

4.4. Alternative 4 – Fully Signalized Traffic Circle 40

4.5. Alternatives Analysis 42

4.5.1. Alternative 1 - Roundabout 43

4.5.2. Alternative 2 - Bi-furcated Intersection 45

4.5.3. Alternative 3 - 4-leg Intersection 47

4.5.4. Alternative 4 – Fully Signalized Traffic Circle 49

4.6. Comparison of Alternatives 51

5.0 Findings and Recommendations 54

5.1. Findings 54

5.2. Recommendations 55

5.2.1. Reducing Vehicle-Pedestrian Conflicts on Massachusetts Avenue 55

5.2.2. Improving Throughput Capacity on Nebraska Avenue 55

5.2.3. Other 55

5.3. Infrastructure Recommendations 56

Appendix A - Data Collection Results

Appendix B - Crash Data Analysis Results

Appendix C - VISSIM Simulation Modeling Results

List of Figures

Figure 1-1 | Map of Ward Circle Area (*Source: Google Maps*) 7

Figure 1-2 | Study Area of Ward Circle, NW (*Source: Google Maps*) 7

Figure 1-3 | Left Turn Operations at Ward Circle, NW (*Source: Gorove Slade Associates*) 10

Figure 3-1 | Turning Movement Count Locations (*Source: Precision Systems Inc.*) 20

Figure 3-2 | Peak Hour Volumes at Ward Circle (*Source: Precisions Systems Inc.*) 21

Figure 3-3 | American University Shuttle Bus Routes (*Source: American University*) 23

Figure 3-4 | WMATA Metro Bus Routes (*Source: WMATA*) 23

Figure 3-5 | Peak Hour Bicycle and Pedestrian Volumes at Ward Circle (*Source: Parsons Brinckerhoff*) .. 25

Figure 3-6 | Existing Signage and Pavement Markings (*Source: Parsons Brinckerhoff)* 27

Figure 3-7 | Existing Crash Data Summary (*Source: Precision Systems Inc.*) 28

Figure 3-8 | Ward Circle Collision Diagram (*Source: Precisions Systems Inc.*) 29

Figure 3-7 | Existing Conditions as Modeled in the VISSIM Simulation Model (*Source: Parsons Brinckerhoff*) 31

Figure 3-8 | VISSIM Screen Shot of Existing Traffic Operations Model (*Source: Parsons Brinckerhoff*) 34

Figure 4-1 | Roundabout Alternative (*Source: Parsons Brinckerhoff*) 37

Figure 4-2 | Bi-furcated Intersection Alternative (*Source: Parsons Brinckerhoff*) 38

Figure 4-3 | 4-Leg Intersection Alternative (*Source: Parsons Brinckerhoff*) 39

Figure 4-4 | Fully Signalized Traffic Circle Alternative (*Source: Parsons Brinckerhoff*) 41

Figure 4-5 | Snapshot of Roundabout Alternative Simulation Model (*Source: Parsons Brinckerhoff*) 43

Figure 4-6 | Snapshot of Bi-furcated Intersection Alternative Simulation Model (*Source: Parsons Brinckerhoff*) 45

Figure 4-7 | Snapshot of 4-leg Intersection Alternative Simulation Model (*Source: Parsons Brinckerhoff*) 47

Figure 4-8 | Snapshot of Fully Signalized Traffic Circle Alternative Simulation Model (*Source: Parsons Brinckerhoff*) 49

List of Tables

Table 3-1| Traffic Data Collection Plan 19

Table 3-2 | GEH Methodology Realism Test..... 32

Table 3-3 | GEH Methodology Results 33

Table 3-4 | LOS Results of Existing Traffic Conditions..... 34

Table 4–1 | Comparison of Alternatives 41

Table 4-2 | Results of Roundabout Simulation Modeling Results 44

Table 4-3 | Results of Bi-furcated Intersection Simulation Modeling Results..... 46

Table 4-4 | Results of 4-leg Intersection Simulation Modeling Results 48

Table 4-5 | Results of Fully Signalized Traffic Circle Simulation Modeling Results..... 50

Table 4-2 | Comparison of Analysis Results for Ward Circle 51

Table 4-3 | Queue Length Summary 53

1.0 Background

1.1. Study Area

Ward Circle, NW (the Circle) is a traffic circle located in upper northwest of Washington, DC. The Circle intersects Nebraska Avenue, NW and Massachusetts Avenue, NW. The Circle is named after Major General Artemas Ward, a historic figure from the American Revolutionary Ward and a Congressman from Massachusetts. A statue bearing the General's likeness is located in the center of the Circle. The Circle is owned and maintained by the National Park Service (NPS). The streets, sidewalks and traffic elements are maintained by the District Department of Transportation (DDOT).

The center of the American University campus is located in the northwest corner quadrant of the Circle. In fact, American University owns the property on three quadrants of the Circle: the northwest quadrant, home to the Ward Circle Building; the southwest quadrant, home to the Nebraska Avenue Parking Lot, an off-street parking area; and the northeast quadrant, home to the Katzen Arts Center. The Department of Homeland Security (DHS) has located a portion of its staff to the Nebraska Avenue Complex (NAC), which is located in the southeast quadrant of the Circle. A map of the area is shown in Figure 1-1. The land areas adjacent to the Circle are shown in Figure 1-2.

Nebraska Avenue, NW runs from southwest to northeast through the Circle, and its approaches are signalized. Nebraska Avenue, NW also circumnavigates the Circle. In contrast, Massachusetts Avenue, NW runs southeast to northwest through the Circle and its approaches are controlled by yield signs.

Both Massachusetts Avenue, NW and Nebraska Avenue, NW are four-lane roadways with two lanes entering and exiting the Circle. The number of lanes within the Circle varies with two lanes adjacent to the Massachusetts Avenue, NW entries; three lanes adjacent to the Nebraska Avenue, NW entries; and four lanes (including a dedicated right turn pocket) prior to the exits from the Circle onto northbound and southbound Nebraska Avenue, NW.

Figure 1-1 | Map of Ward Circle Area (*Source: Google Maps*)

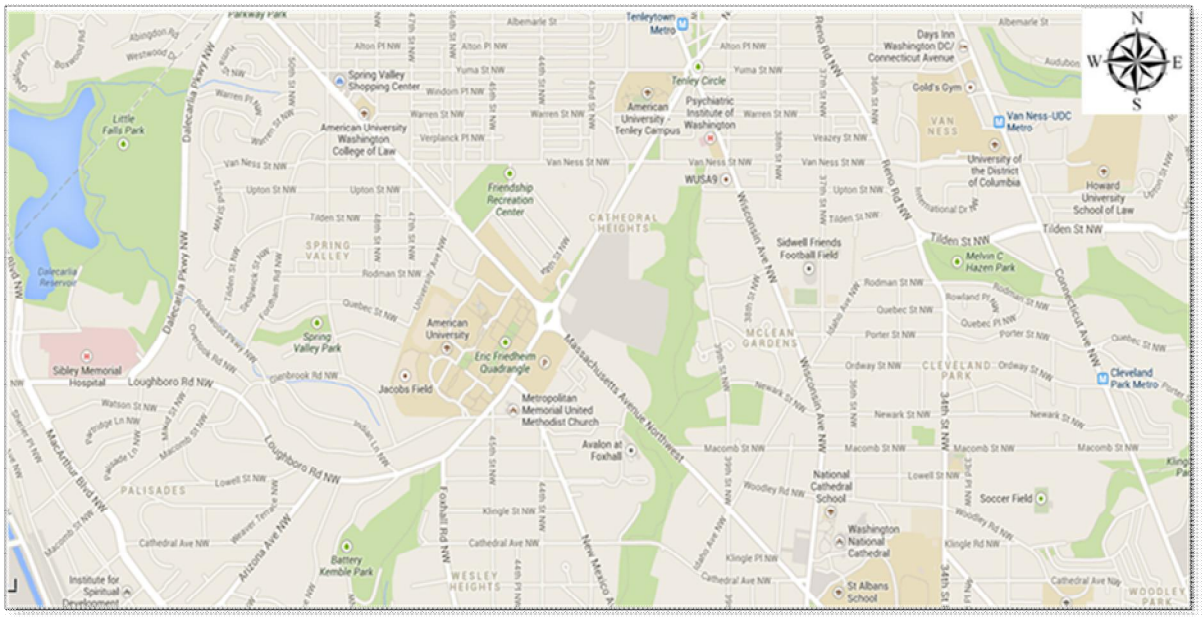

Figure 1-2 | Study Area of Ward Circle, NW (*Source: Google Maps*)

The Circle accommodates multiple modes of transportation. Sidewalks exist on all sides of the Circle and pedestrian crosswalks exist across all approaches to the intersection. There are no direct pedestrian crossing points into the center of the Circle, where the Ward statue is located. Pedestrian refuge islands are located at the Massachusetts Avenue, NW approaches. Since Metro buses and American University student buses traverse the Circle, bus stops are located on all four approaches to the Circle. Although there is no designated bicycle elements within the Circle, such as a dedicated bicycle lane, bicyclists are active throughout the Circle, utilizing roadways and sidewalks as their means of traversing the Circle. A Capital Bikeshare station is located at the Circle on American University's campus, serving 15 docking stations.

1.2. Existing Traffic Operations

Both Massachusetts Avenue, NW and Nebraska Avenue, NW are classified as principal arterials in the DDOT 2014 Functional Classification Map. According to 2011 DDOT traffic volumes, approximately 29,000 vehicles travel on Nebraska Avenue, NW daily and 22,000 vehicles travel on Massachusetts Avenue, NW daily.

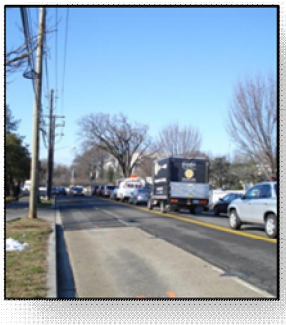

During the morning and afternoon peak periods, there is congestion on both roadways at the Circle. Contributing factors include the large number of commuting vehicles traversing the Circle during peak periods.

Traffic Congestion – Traffic is already heavily congested along New Mexico, Nebraska, and Massachusetts Avenues feeding into the Circle. Commuter traffic has increased dramatically in the last ten years along the Massachusetts and Nebraska Avenue corridors which have now become major transit entries to the city.

Heavy Pedestrian Traffic – American University-related pedestrian traffic has increased dramatically, in large part, due to the increase in the number of students living at two nearby apartment buildings located south of the Circle on Massachusetts Avenue. Increased usage of unsignaled crosswalks both north and south of the Circle – less than one block from signaled crossings – have led to additional vehicle delays and potential for vehicle-pedestrian conflicts. Pedestrian activity is expected to increase in the future with the expansion of American University.

Nebraska Avenue Complex Impacts – The number of vehicles turning left from the roadways to driveways to access the NAC along Nebraska Avenue, NW and Massachusetts Avenue, NW contribute to vehicular delays.

Bus Operations – Buses stop within one hundred feet of the Circle approaches, which creates delays for vehicles waiting to enter the Circle.

Neighborhood Impacts – The traffic conditions along New Mexico, Nebraska, and Massachusetts Avenues have contributed to an increase of traffic on neighborhood streets. Residents along Quebec, Rodman, 49th, and Tilden Streets; University Avenue in Spring Valley; and along Newark and 45th Streets in Wesley Heights complain routinely about cars speeding on their streets to avoid the congested corridors along the major arteries. These traffic pressures also have impacted conditions on Foxhall Road from Canal Road to Nebraska Avenue, NW.

DDOT has responded to these problems by improving signage in the area, redrawing lane markers, and proposing changes in the timing of the traffic lights for pedestrians. Speed bumps were added in recent years in front of Horace Mann Elementary School to slow down cut-through traffic using Newark Street. Residents have expressed concern that changing the signal timing to facilitate pedestrian traffic at the Circle will further back-up vehicles and encourage even more dangerous pedestrian crossings mid-block on Nebraska Avenue, NW and Massachusetts Avenue, NW.

1.3. Operational Issues

Traffic movements within the Circle are intended to prohibit left turns from the Circle onto Nebraska Avenue, NW through lanes although drivers are frequently observed making such turns. Likewise, left turns from Nebraska Avenue, NW through lanes into the Circle are similarly prohibited. Drivers seem to adhere to this restriction considering that such turns are in direct conflict with oncoming through traffic from the opposite direction of Nebraska Avenue, NW. Signal operations at the Nebraska Avenue, NW intersections are two-phase, alternating between serving traffic in the Circle and Nebraska Avenue, NW. Other than basic road signs and a pavement marking indicating through movements, only, there is nothing preventing this behavior.

Figure 1-3 | Left Turn Operations at Ward Circle, NW (*Source: Gorove Slade Associates*)

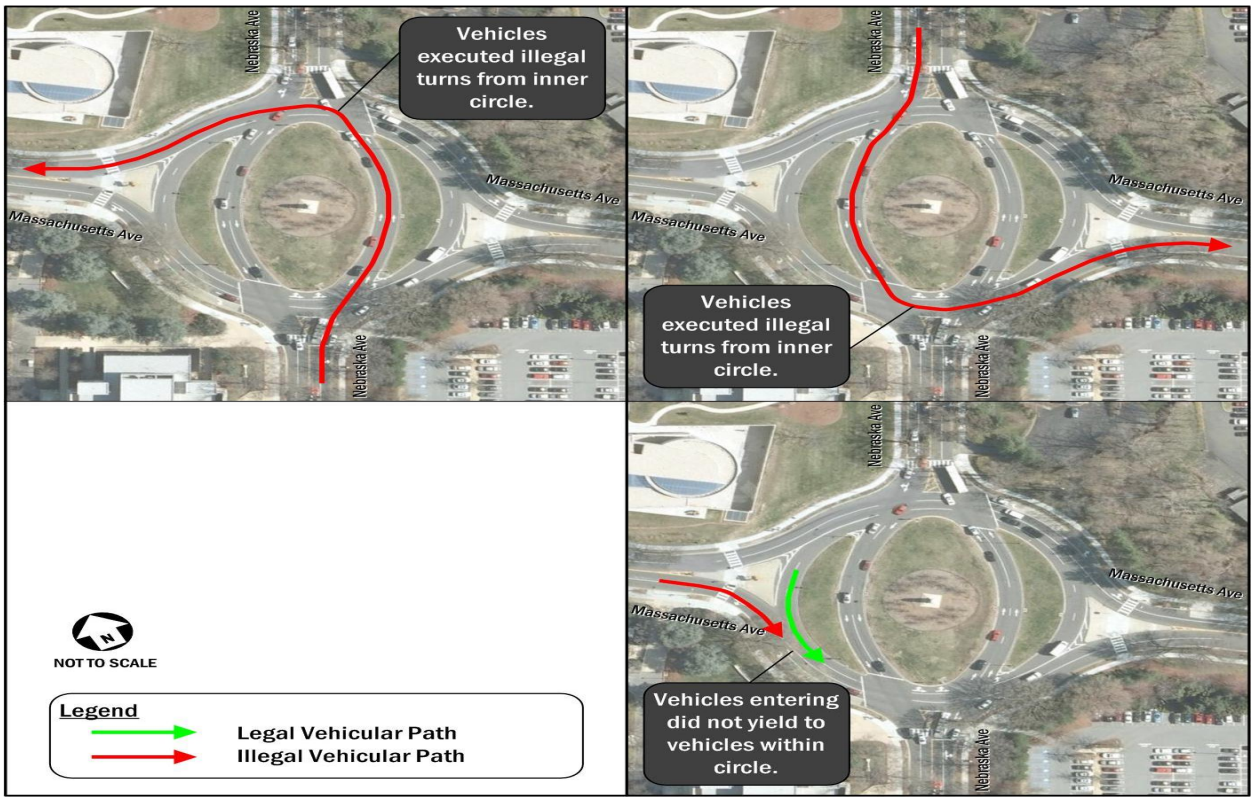

An excessive number of weaving movements were observed occurring within the Circle. This is due to the multiple opportunities for motorists to make short, weaving movements within the Circle. The weaving, particularly at confusing junctions, creates the potential for vehicle conflicts.

2.0 Previously Reviewed Studies

The following is a summary of the studies previously conducted of Ward Circle (the Circle). Note the similarity of the issues described by each study.

2.1. American University Master Plan, Transportation Report

The transportation report for the American University (AU) Master Plan was completed by Gorove/Slade Associates in March 2011.

The transportation report and technical appendices, which included a traffic impact study of the 2011 AU Master Plan for the main campus, proposed the following elements: expansion of the East Campus; a new building and underground parking garage at Nebraska and New Mexico Avenues; the installation of a mid-block crosswalk from the new development across Nebraska Avenue, NW, and a new driveway entrance at New Mexico Avenue, NW.

The transportation report presented short and long-term mitigation measures and outlined a transportation demand management plan. Among the goals of the transportation demand management plan was to minimize the conflicts between pedestrians and vehicles around the campus, and to work with the community and stakeholders in finding a long-term solution for the Circle. Overall, the transportation report stated that there would be minimal impacts to Nebraska Avenue, NW and Massachusetts Avenue, NW as a result of campus expansion.

The transportation report contained the following findings:

- **Transportation Demand Trends** – Parking demand and trip generated by the campus during the commuter peak hours have trended down since 1991, at an average of approximately 3 percent per year, even with a sustained increase in total campus population and activity.
- **Future Campus Expansion** – The 2011 AU Master Plan assumes that, by 2020, there will be a net reduction of 429 parking spaces, a 12-13 percent increase in faculty/staff and students, and a 12.8 percent increase in trip generation.
- **Vehicles** – The 2011 AU Master Plan will increase vehicular trips in the range of 400-500 vehicles per peak hour.

- **Pedestrians** – The 2011 AU Master Plan will lead to the increase of pedestrian activity on Nebraska Avenue, NW and at the Circle, upwards of 200-500 pedestrians during the peak hours.

- **Ward Circle** – The Circle will be congested in the future years with or without the increase in traffic from the AU Master Plan.

    - The traffic signal at the southern-most point of the Circle: This intersection experiences long delays, but short-term recommendations made by DDOT – right-turn lane addition and signal timing modification – will mitigate the delays.

    - Unsignalized approaches on Massachusetts Avenue: The right turn from Massachusetts Avenue, NW, northwest-bound into the Circle, is projected to operate at unacceptable levels of delay during the morning and evening peak hours in the future. These delays are generated by the number of pedestrians crossing at the intersection and heavy volumes of conflicting vehicles for which the vehicles are required to yield. A recommendation described in the following section can mitigate the vehicular delays at this intersection. In addition, the pedestrian crossings of Massachusetts Avenue, NW also operate at unacceptable levels of delay due to the high amount of commuter traffic that limits the number of acceptable gaps in traffic.

- **Massachusetts Avenue, NW at Nebraska Avenue Complex (NAC) Driveway** – Exiting traffic from the NAC has an unacceptable level of delay during existing and future conditions.

- **Massachusetts Avenue, NW at Westover Place** – Exiting traffic from Westover Place experiences an unacceptable level of delay during both peak hours under existing and future conditions.

The transportation report contained the following recommendations:

- Short-Term Recommendations for Ward Circle

    - Widen the sidewalks along the north side of Nebraska Avenue, NW to a minimum of 10 feet to provide enough room for cyclists to bicycle off-street.

    - Improve conditions along southeast-bound Nebraska Avenue, NW, adjacent to campus, through elimination of a driveway and installation of landscape features that reduce mid-block crossings.

- Install an actuated traffic signal at the location of the new right-in/right-out driveway on Massachusetts Avenue, NW. This signal will be a pedestrian-activated traffic signal, which can also provide a green left-turn arrow for traffic exiting the US Department of Homeland Security (DHS) complex, since pedestrians and left-turning vehicles would not conflict with each other.

- Install a controlled crosswalk which would reduce the number of crossings at the southeast corner of the Circle at Massachusetts Avenue, NW (currently an unsignalized crossing). The existing unsignalized crossing creates excessive delays for vehicles when large numbers of pedestrians are present and presents a hazard to pedestrians crossing against large traffic volumes moving at high speeds.

- Consolidate several bus stops along Nebraska Avenue, NW and Massachusetts Avenue, NW to accomplish two goals: (1) reduce mid-block pedestrian crossings along Nebraska Avenue, NW and (2) take advantage of the new traffic signal to provide controlled crossings of Massachusetts Avenue, NW for bus riders (this recommendation is described in more detail below).

- Eliminate access to parking from Nebraska Avenue, NW and construct a landscaped barrier to deter mid-block pedestrian crossings.

- Alter the traffic signal at the crosswalk at the southern-most signalized intersection of the Circle across Nebraska Avenue, NW to separate right-turning vehicles from pedestrians at the crosswalk.

- Relocate some existing bus stop locations to address pedestrian issues along Nebraska Avenue, NW.

- Long-Term Recommendations for Ward Circle

  - AU to lead a joint study on long-term options for Ward Circle. This study would need to include representatives from the various stakeholders with interest in the Circle such as AU; the surrounding residential and business community; and major parcel owners such as the US Department of Homeland Security, DDOT, and the National Park Service. The transportation report recommends including at least five alternatives in the study: No-

build; No-build with additional crosswalks; Grade-separated; Fully-signalized circle with removal of inner lanes; and traditional intersection.

2.2. Nebraska Avenue Complex – Homeland Security

The General Services Administration (GSA), on behalf of the DHS, developed a Master Plan for the Nebraska Avenue Complex (NAC) in 2010. The Master Plan addressed the expansion of the NAC campus to support the DHS consolidation efforts in the National Capital Region. DHS proposed to relocate 28,000 employees from 50 locations into seven to 10 locations. This meant that the number of employees coming to the NAC campus could double the population that existed at the time of this report. Therefore, the NAC considered adding a new facility, and security and infrastructure elements to support the relocation. Four alternatives – a No Action and three growth alternatives – were analyzed as part of the Master Plan.

Kimley-Horn and Associates, Inc. conducted the transportation study for the NAC Master Plan. The transportation study analyzed the Master Plan Proposed Action for a 2020 design year and 2030 out-year. The transportation study used traffic volumes from the AU Master Plan, conducted by Gorove/Slade Associates, along with traffic volumes from current data collection. The transportation study concluded that the NAC Master Plan will have a negligible effect on the transportation network in the study area under all conditions. The transportation study supported the idea that the existing street network would provide multiple entry and exit points to the study area, resulting in an effective dispersal of traffic. Therefore, all study area intersections would operate at acceptable levels of service (LOS), LOS D or better, during the morning and afternoon peak hours. However, the transportation study noted that the intersection of the Circle and Massachusetts Avenue, NW (westbound) would operate at LOS D during the morning peak hour and that improvements to the intersection would be performed by DDOT as identified in the Rock Creek West 2 Livability Study.

The transportation study determined that all site driveways to the NAC campus would operate at LOS A along Nebraska Avenue, NW and Massachusetts Avenue, NW in both 2020 and 2030. Only the left turns exiting the facility would operate at less than optimal levels of service (LOS D). The queues along Nebraska Avenue, NW and Massachusetts Avenue, NW for vehicles turning into the NAC campus would be minimal.

2.3. Advisory Neighborhood Commission 3D AU Master Plan Traffic Report

Advisory Neighborhood Commission (ANC) 3D commissioned a report to analyze the traffic and parking issues that would result from the AU campus expansion, as noted in the AU Master Plan. ANC 3D represents the neighborhoods of Spring Valley, Wesley Heights, Palisades, Kent, and Foxhall Crescents. ANC 3D felt that the results of the transportation study associated with the AU Master Plan conflicted with the goals of the AU Master Plan, which were to minimize pedestrian and vehicle conflicts while creating a pedestrian space for the campus. ANC 3D also felt that the transportation study did not adequately assess existing heavily congested traffic conditions; did not consider the growth in traffic from the expansion of the NAC; and did not consider the existing or future neighborhood cut-through traffic that would occur as a result of the campus expansion.

ANC 3D believed that the short-term improvements performed by DDOT at the Circle were inadequate to deal with the increased amount of vehicle and pedestrian traffic. ANC 3D expressed concern that changing signal timings at the Circle, to facilitate pedestrian movements, would create delays and queuing on the approaches to the Circle and would create more vehicle-pedestrian conflicts on Nebraska Avenue, NW and Massachusetts Avenue, NW. ANC 3D also felt that AU's decision to locate an entrance to a new parking garage at the corner of Nebraska Avenue, NW and New Mexico Avenue, NW has further aggravated traffic conditions at the intersection.

The transportation report, prepared by Nelson Nygaard in April 2011, contained the following findings:

- District agencies should seek to reduce traffic in the study area by discouraging automobile use, creating incentives for mass transit use, and reducing the number of parking spaces provided for AU students and employees.
- DDOT should apply additional aggressive measures and additional traffic calming measures on neighborhood streets to discourage cut-through traffic on neighborhood streets.
- DDOT should consider the combined impact of the NAC and AU expansion proposals on the surrounding residential neighborhoods, since the existing infrastructure at the Circle is unable to

absorb increased vehicle and pedestrian traffic resulting from the growth anticipated by the combination of NAC and AU expansion.

- DDOT should move "swiftly and comprehensively" to address traffic-related problems in the Circle.
- AU shuttle buses should be removed from Nebraska Avenue, NW, from the Circle to Rockwood Parkway, to reduce contributing to vehicle delays.
- The surface parking lot on Nebraska Avenue, NW, in the East Campus, should be eliminated and turned into green space as a buffer to help discourage AU students and employees from driving to campus.
- There should be no entrance or exit on Massachusetts Avenue, NW for the proposed parking facility at the East Campus.

ANC 3D requested that DDOT identify a comprehensive solution to traffic problems in the Circle, and address existing and future traffic issues associated with the proposed expansion plans at AU and the NAC campus. ANC 3D also recommended that AU address pedestrian traffic mitigation strategies, including building a tunnel or bridge at the Circle, to ease traffic congestion in the area.

2.4. Westover Place

The Westover Place community expressed concerns with existing traffic conditions on their property and vehicle-pedestrian conflicts along Westover Place at New Mexico Avenue, NW. As a result of this, they hired Toole Design Group to evaluate the traffic conditions and make recommendations for safety improvements.

Toole Design Group observed the traffic operations and geometric conditions at the intersection of New Mexico Avenue, NW and Westover Place and discovered several factors that contributed to a limited sight distance for drivers, which likely increased the potential for vehicle-pedestrian conflict. As a result, the Westover Place community requested that DDOT install a pedestrian signal with countdown timer at the westbound leg of New Mexico Avenue, NW and Westover Place/Newark Street.

2.5. Ward Circle Traffic Safety Issues

In May 2012, the DDOT Transportation Operations Administration commissioned Sam Schwartz Engineering (SSE) to review the traffic safety concerns at the Circle. SSE noted the low rate of drivers yielding to pedestrians on the unsignalized approaches to the Circle on Massachusetts Avenue, NW. The particularly high volume of pedestrian activity was attributed to students and staff of AU, but also walking and exercise trips generated by neighborhood residents, and by employees of DHS. SSE also reviewed DDOT-provided crash data to note any pedestrian crashes at the Circle. Between 2008 and 2011, there were three pedestrian crashes reported for Massachusetts Avenue, NW at the Circle, none of which resulted in disabling injuries.

As a result of its reviews and observation of traffic operations at the Circle, SSE developed the following short-term recommendations:

1. Study the feasibility of restriping the entry approaches from Massachusetts Avenue, NW to the Circle from the current two-lane design to a single-lane design.
2. Reduce the width of the left lane and install in-road "Stop for Pedestrians" signs on exits to Massachusetts Avenue, NW from the Circle.
3. Modify the entry geometry from Nebraska Avenue, NW to the Circle, to reduce turning radii and lane widths at the Nebraska Avenue, NW approaches.
4. Reduce the width of the right lane in the outer section of the Circle.

2.6. Rock Creek West Livability Study

In December 2010, as part of the Rock Creek West II Livability Study, Parsons Brinckerhoff evaluated the traffic operations at the Circle. A limited evaluation was performed using traffic data from the AU Master Plan and using the Synchro software program to analyze the operations of the intersections at the Circle.

Parsons Brinckerhoff observed existing conditions including weaving movements at the Circle, bicycle and pedestrian activity, and signage

placement. Crash data from 2007 to 2009 revealed that the types of collisions present at the Circle were primarily caused by weaving movements and traffic congestion.

Parsons Brinckerhoff reviewed the results of existing traffic conditions contained in the AU Master Plan, prepared by Gorove/Slade Associates. The analysis, based on the Synchro model, revealed levels of services for the Circle ranging from LOS B to LOS E during the morning and evening peak hours. Parsons Brinckerhoff analyzed an alternative where the Nebraska Avenue, NW through lanes were removed from the Circle and the Circle was reconfigured as a traditional signalized traffic rotary. An evaluation of this configuration revealed that the levels of service for the intersections at the Circle would range from LOS D to LOS F during the morning and evening peak hours. This would result in greater congestion than existing conditions and failing levels of service for the Circle as a whole.

A signal warrant analysis study revealed that signals are warranted on all approaches of the Circle, including Massachusetts Avenue, NW.

Parsons Brinckerhoff concluded that converting the existing unsignalized Circle to a signalized Circle would deteriorate traffic operations as the Circle could not adequately accommodate traffic with the removal of the Nebraska Avenue, NW through lanes. However, a signalized Circle would improve pedestrian safety by providing protected crossings for pedestrians. Traffic weaving, and its associated issues at the Circle, could be improved with clear signage and pavement markings. Lastly, Parsons Brinckerhoff recommended that the analysis be performed using a more suitable tool for analyzing traffic circles, such as the VISSIM microscopic simulation model.

3.0 Existing Traffic Conditions

The following section details the existing traffic conditions of Ward Circle, NW (the Circle).

3.1. Traffic Volumes

Multi-modal transportation data was collected as part of the study of Ward Circle. Vehicular turn movement counts were collected at 11 intersections on Wednesday, February 27, 2013. Turn movement counts were collected in ten hour periods from 7am-2pm and 4pm-7pm, as well as in one-hour peak hour times. These times were considered not only to capture the vehicular peak hour times but also times associated with existing class schedules at American University. The traffic data collection plan for each intersection is shown in Table 3-1. Figure 3-1 shows the location of each turning movement count conducted as part of this study. Ten-hour traffic counts were conducted at eight intersections marked as RED on the map, and one-hour morning and one-hour evening peak traffic counts were conducted at three locations marked as BLUE.

Table 3-1 | Traffic Data Collection Plan

ID	Intersection	Day	Time	Note
1	Nebraska Avenue and Ward Circle, NW (North)	2/27/2013 (Wednesday)	7:00 AM-2:00 PM 4:00 PM-7:00 PM	Video Count for Vehicle and Pedestrian
2	Nebraska Avenue and Ward Circle, NW (South)	2/27/2013 (Wednesday)	7:00 AM-2:00 PM 4:00 PM-7:00 PM	Video Count for Vehicle and Pedestrian
3	Massachusetts Avenue and Ward Circle, NW (East)	2/27/2013 (Wednesday)	7:00 AM-2:00 PM 4:00 PM-7:00 PM	Video Count for Vehicle and Pedestrian
4	Massachusetts Avenue and Ward Circle, NW (West)	2/27/2013 (Wednesday)	7:30 AM-8:00 AM 4:00 PM-7:00 PM	Video Count for Vehicle and Pedestrian
5	AU entrance and Massachusetts Avenue, NW	2/27/2013 (Wednesday)	7:00 AM-2:00 PM 4:00 PM-7:00 PM	Video Count for Vehicle and Pedestrian
6	Nebraska Avenue and New Mexico Avenue, NW	2/27/2013 (Wednesday)	7:00 AM-2:00 PM 4:00 PM-7:00 PM	Video Count for Vehicle and Pedestrian
7	Nebraska Avenue and Van Ness Street, NW	2/27/2013 (Wednesday)	7:00 AM-8:00 PM 4:00 PM-5:00 PM	Manual Count for Vehicle and Pedestrian
8	Driveway at 4201 Massachusetts Avenue, NW	2/27/2013 (Wednesday)	7:00 AM-2:00 PM 4:00 PM-7:00 PM	Video Count for Vehicle and Pedestrian
9	DHS Entrance/Exit at Nebraska Avenue, NW	2/27/2013 (Wednesday)	7:00 AM-8:00 AM 4:00 PM-5:00 PM	Manual Count for Vehicle and Pedestrian
10	AU Parking Entrance/Exit at Nebraska Avenue, NW	2/27/2013 (Wednesday)	7:00 AM-8:00 AM 4:00 PM-5:00 PM	Manual Count for Vehicle and Pedestrian
11	DHS Parking Entrance/Exit at Massachusetts Avenue, NW	2/27/2013 (Wednesday)	7:30 AM-8:00 AM 4:00 PM-5:00 PM	Manual Count for Vehicle and Pedestrian

Figure 3-1 | Turning Movement Count Locations (*Source: Precision Systems Inc.*)

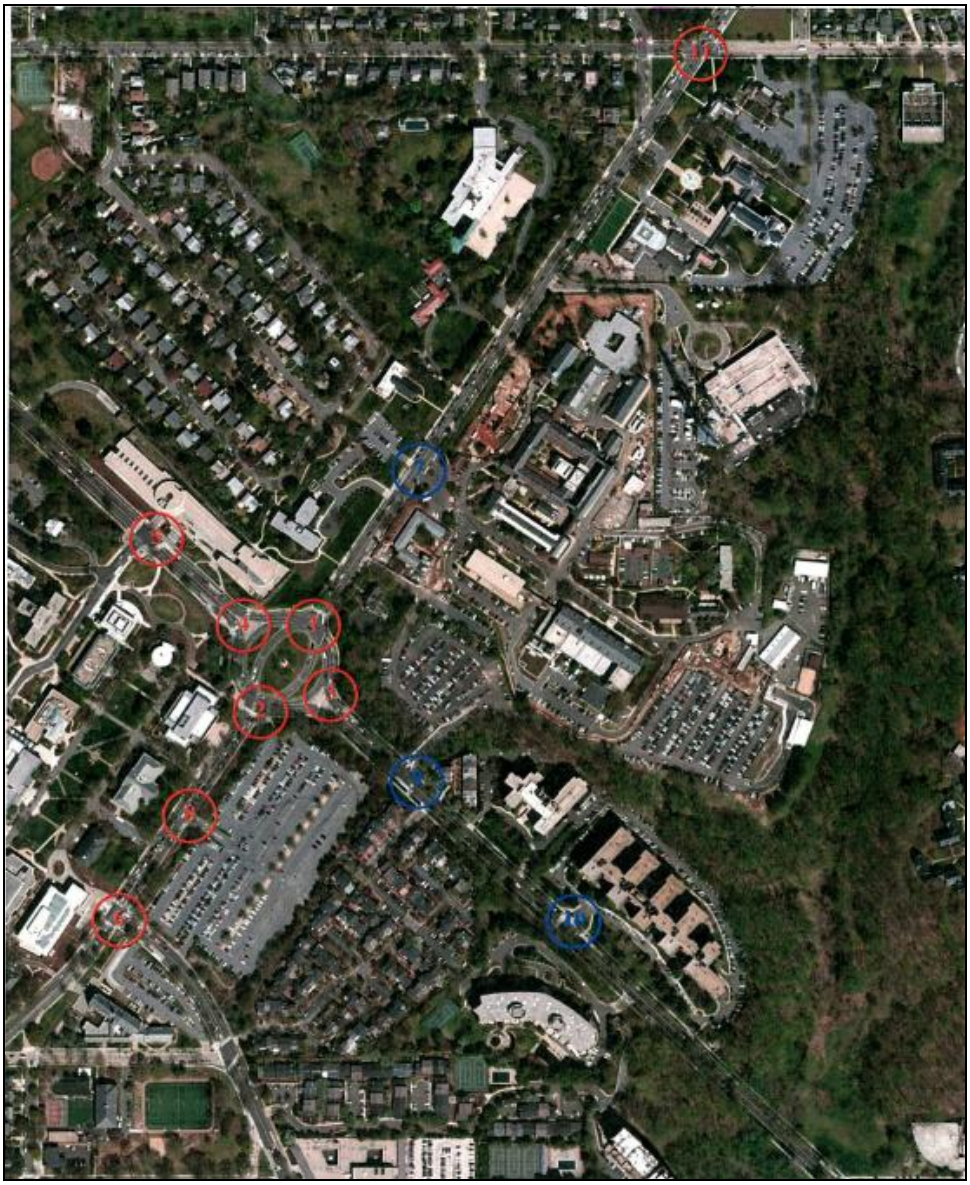

Figure 3-2 shows the peak hour traffic volumes on the roadways at the Circle. The detailed traffic data collection sheets are presented in Appendix A. The traffic demand is equally balanced in the morning peak hour on both roadways entering the circle. Entering morning peak hour volumes into Ward Circle range between approximately 2,200 vehicles on Nebraska Avenue NW and 2,100 on Massachusetts Avenue NW. In the evening peak hour, there are approximately 2,100 vehicles entering the Circle from Nebraska Avenue NW as and 2,000 on Massachusetts Avenue NW. Nebraska Avenue NW serves slightly heavier volumes in both peak periods.

Ward Circle NW

Figure 3-2 | Peak Hour Volumes at Ward Circle (*Source: Precisions Systems Inc.*)

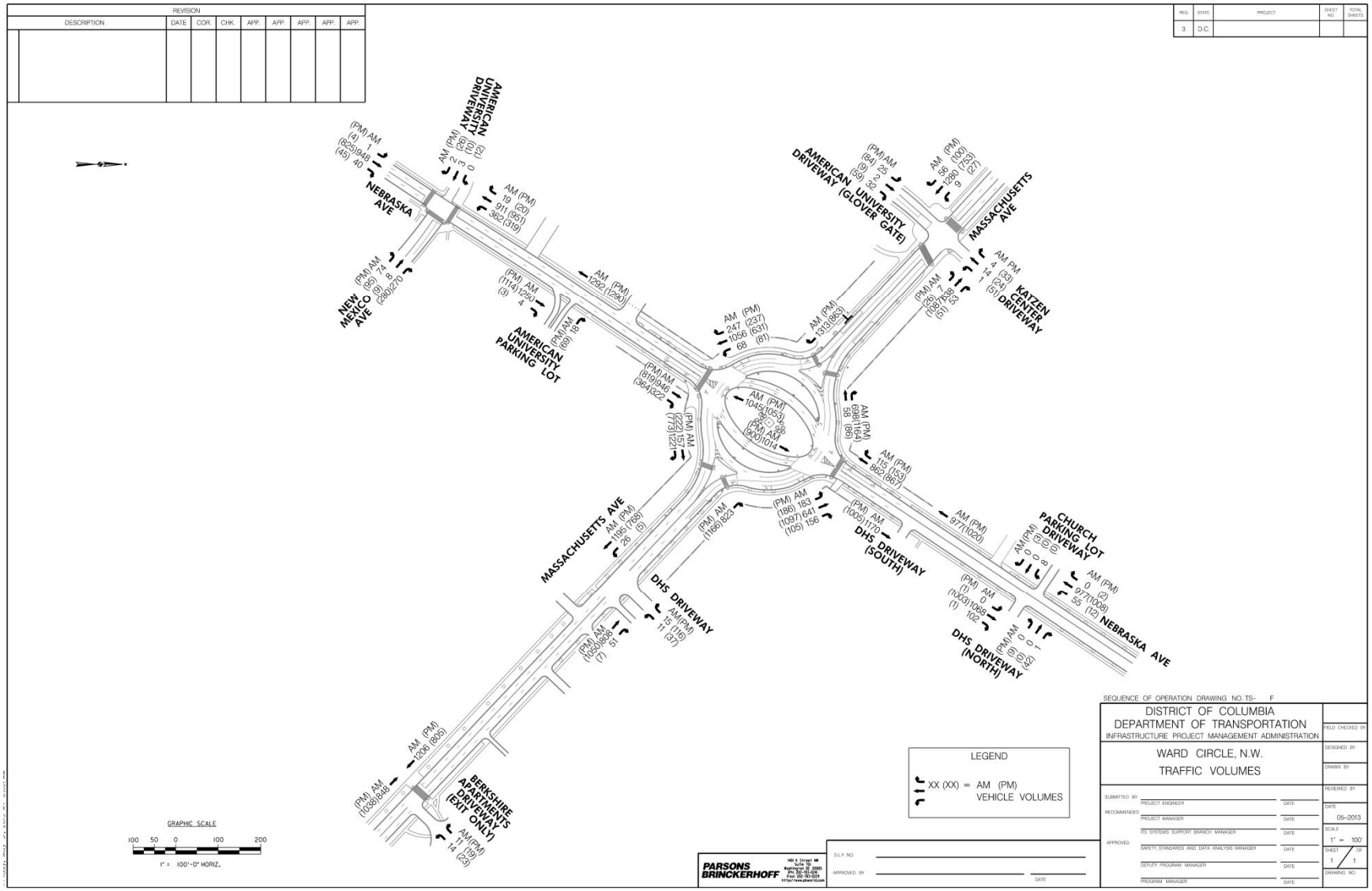

Ward Circle NW

Traffic volumes reveal that the vehicular distribution is directional during the peak hours. In the morning peak hour, the peak direction of travel is from south to north on Nebraska Avenue, NW and from west to east on Massachusetts Avenue, NW. Approximately 1,200 vehicles travel in the peak direction on Nebraska Avenue, NW and approximately 1,300 vehicles travel in the peak direction on Massachusetts Avenue, NW. The peak direction of travel reverses in the evening peak hour on Massachusetts Avenue, NW with 1,100 vehicles traveling in this direction. However, traffic is evenly distributed on Nebraska Avenue, NW in the evening peak hour with approximately 1,100 vehicles traveling in both directions. Approximately 4,200-4,300 vehicles travel through the Circle in the morning peak hour, and 4,200 vehicles in the evening peak hour.

3.2. Transit Operations

Both WMATA Metro buses and AU shuttles travel through the Circle daily (see Figure 3-3). American University shuttles travel from the main campus, Washington College of Law, Tenley Campus, and the Tenleytown/AU Metro Station. Bus stops for the AU shuttles that are near the Circle are located on Massachusetts Avenue, NW next to Nebraska Hall; on Nebraska Avenue, NW in front of Nebraska Avenue; and on Nebraska Avenue, NW near the Katzen Arts Center. The AU shuttles and the WMATA Metro buses share the same stops. All bus stops are within 100 feet of the Circle.

The AU shuttles follow two routes through the Circle: Blue Shuttle Line and the Red Shuttle Line. The Blue Shuttle Line runs at 10-minute intervals during peak hour periods. The Red Shuttle Line runs at 15-minute intervals during peak hour periods. Traffic volume counts show that 25 AU shuttles travel through the Circle in the morning peak hour and 23 shuttles in the evening peak hours.

There are five WMATA Metro bus routes that travel through the Circle: M4, N2, N3, N4, and N6 (see Figure 3-4). Based on the WMATA time table, there are 232 bus trips per day for buses serving the Circle. According to traffic counts, 40 Metro buses travel through the Circle in both the morning and evening peak hours.

Figure 3-3 | American University Shuttle Bus Routes (*Source: American University*)

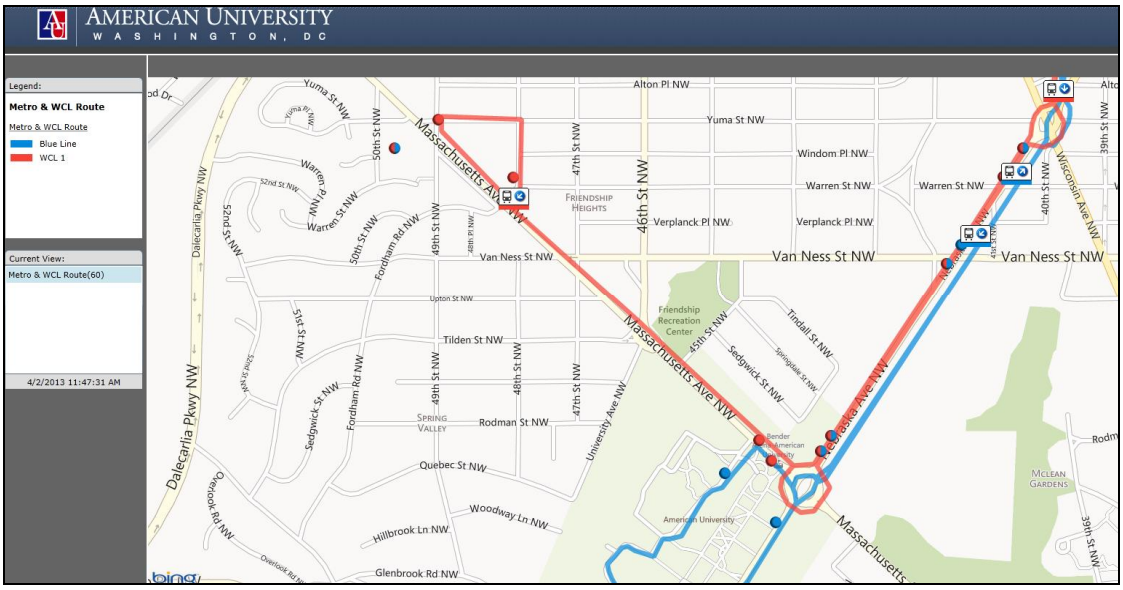

Figure 3-4 | WMATA Metro Bus Routes (*Source: WMATA*)

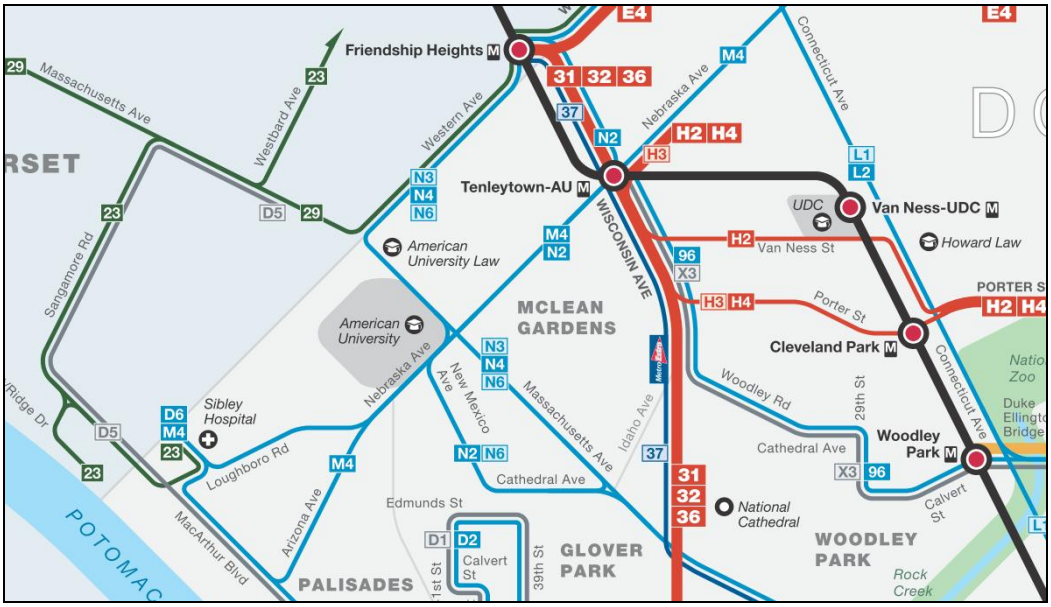

3.3. Bicycle Volumes

AU has an active bicycle community which comprises an important mode of travel at the Circle. Bicyclists travel mostly on the sidewalks adjacent to the Circle rather than in the road along Nebraska

and Massachusetts Avenues, NW. In 2010, DDOT has placed a Capital Bikeshare station on Massachusetts Avenue, NW near the Circle, which is one of three stations on the campus.

During the morning peak hour, there are 20 bicycles that travel through the Circle. In the evening peak hour, the bicycle volume is 15.

3.4. Pedestrian Volumes

AU, like other college campuses where most of the facilities are within walking distance, has a preponderance of pedestrians. The proximity of off-campus housing to the campus leads to a large amount of pedestrians at the Circle. Pedestrians are observed traveling along the sidewalks adjacent to the Circle and traversing the crosswalks at the Circle. Figure 3-5 shows that pedestrians mainly walk from off-campus housing on Massachusetts Avenue, NW; cross the east leg (Massachusetts Avenue, NW) of the Circle; continue around the Circle; and cross the south leg (Nebraska Avenue, NW) of the Circle to the AU campus.

Pedestrians were observed to impact traffic at the Circle. The unsignalized crosswalks at both Massachusetts Avenue, NW approaches of the Circle – less than one block from signalized crossings – have led to additional vehicle delays and potential for vehicle-pedestrian conflicts. Pedestrians have become used to entering the crosswalks at their leisure rather than waiting for appropriate gaps in traffic to cross Massachusetts Avenue, NW.

Pedestrian counts were taken in conjunction with the vehicle traffic counts. According to the counts, approximately 300 pedestrians crossed the intersection at the Circle during the morning peak hour. During the evening peak hour, approximately 900 pedestrians crossed the intersections at the Circle. Please note that pedestrians may have been counted two or more times depending on their destination, particularly if pedestrians crossed multiple intersections within the Circle during the count period.

Figure 3-5 | Peak Hour Bicycle and Pedestrian Volumes at Ward Circle (*Source: Parsons Brinckerhoff*)

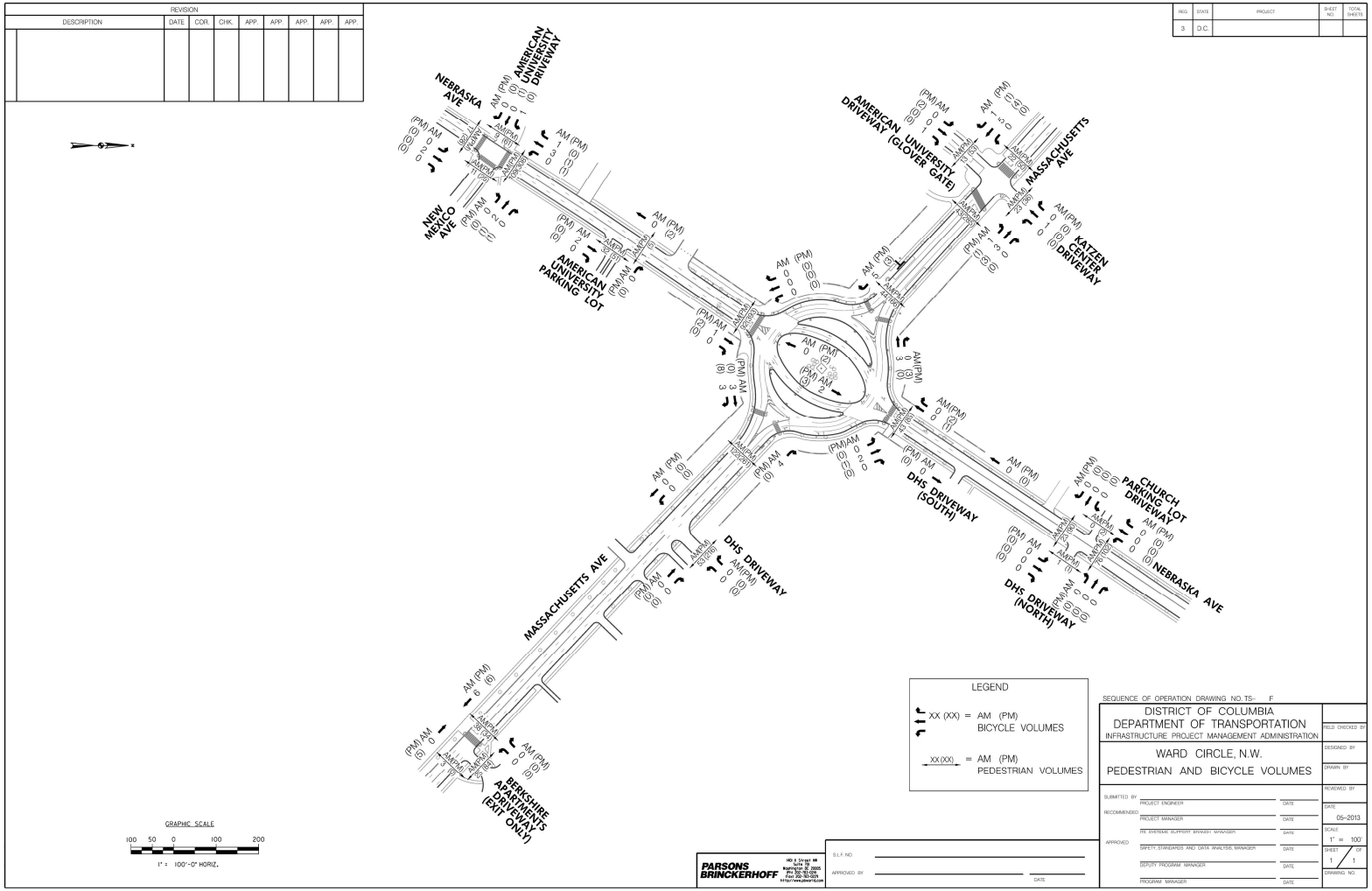

3.5. Signage and Pavement Markings

Figure 3-6 shows the existing signage and pavement markings at the Circle. Multiple signs direct drivers through the complicated movements around the Circle and prevent illegal left turns. In 2011, DDOT added signage to address some of the comments from the community regarding traffic and pedestrian safety. However, as noted in Figure 3-6, an excess of signage and pavement markings exists at the Circle.

3.6. Traffic Safety

Traffic crash data from 2009 to 2011 were collected for the project study area and traffic collision diagram was developed. There were totally 97 crashes occurred at Ward Circle from 2009 to 2011, 72 of which occurred at north and west intersection of the Circle. There were 39 injuries and 8 pedestrians involved. 27.8% of traffic crashes are Rear End collisions, 21.6% of traffic crashes are Side Swiped collision and 13.4% of traffic crashes are Right Angle collisions.

The collision diagram and traffic crash summaries by intersection are assembled in Appendix B.

Figure 3-6 | Existing Signage and Pavement Markings (*Source: Parsons Brinckerhoff)*

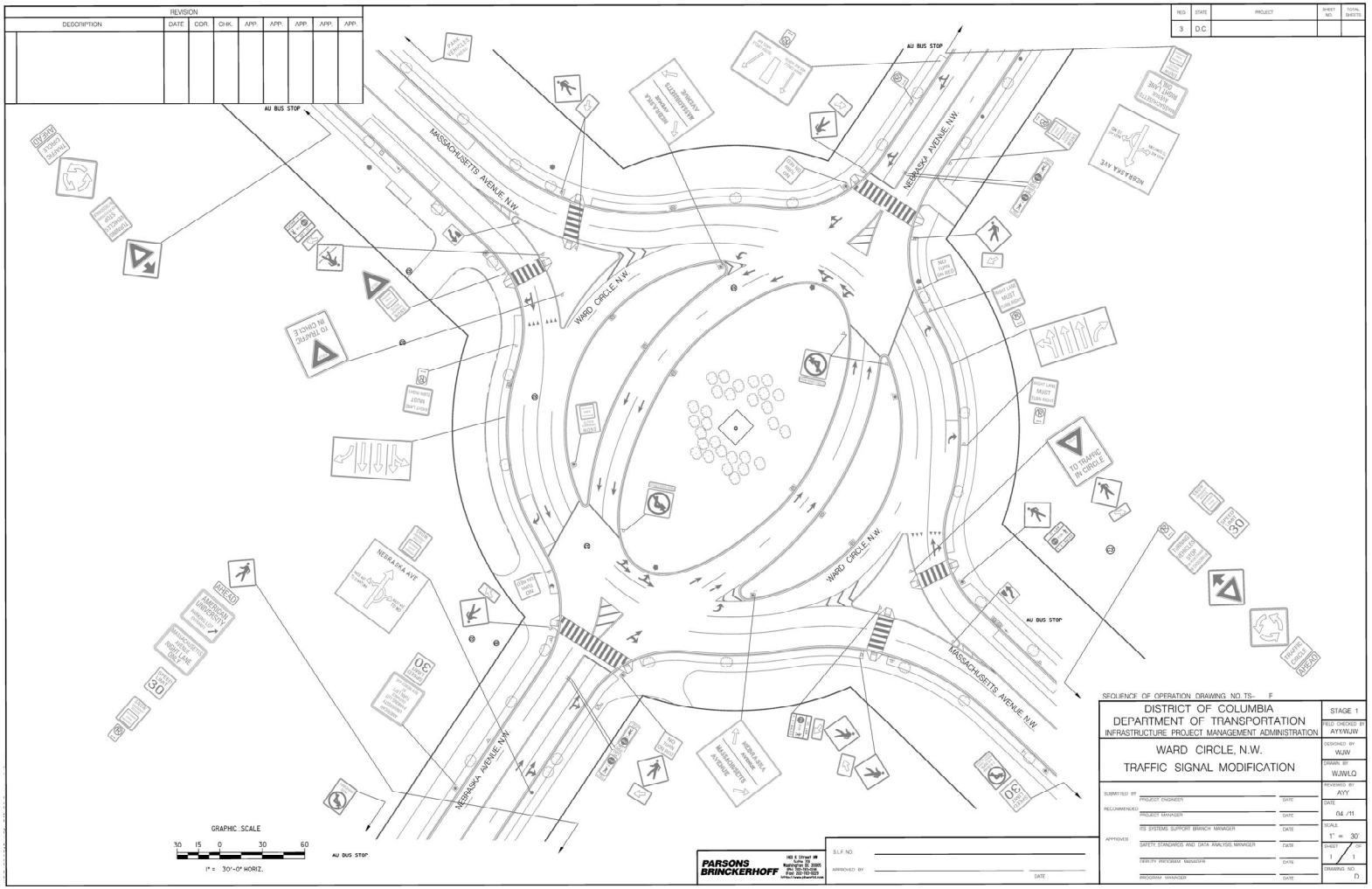

Ward Circle NW

Figure 3-7 | Existing Crash Data Summary (*Source: Precision Systems Inc.*)

1 Massachusetts Avenue non-signalized crosswalk at Ward Circle, west of the circle. A total of 39 collisions were documented at or near this location between 2009 and 2011. 4 of the collisions involved pedestrians with other collisions involving rear end, sideswipe, run off the road, angled and backing up type collisions.

2 Massachusetts Avenue at Ward Circle, non-signalized crosswalk. 3 sideswipe collisions documented at this location between 2009 and 2011, none involving pedestrians.

3 Signalized intersection of Nebraska Avenue at Ward Circle, crosswalk at north side of circle. A total of 33 collisions were documented at or near this location between 2009 and 2011. 3 of the collisions involved pedestrians with other collision types being rear end, sideswipe, run off the road, angled, and backing up type collisions.

4 Signalized intersection of Nebraska Avenue and Ward Circle, crosswalk at south side of circle. A total of 22 collisions were documented at or near this location between 2009 and 2011. None of the collisions involved pedestrians, however other types of crashes involved rear end, sideswipe, run off the road, angled and backing up type collisions.

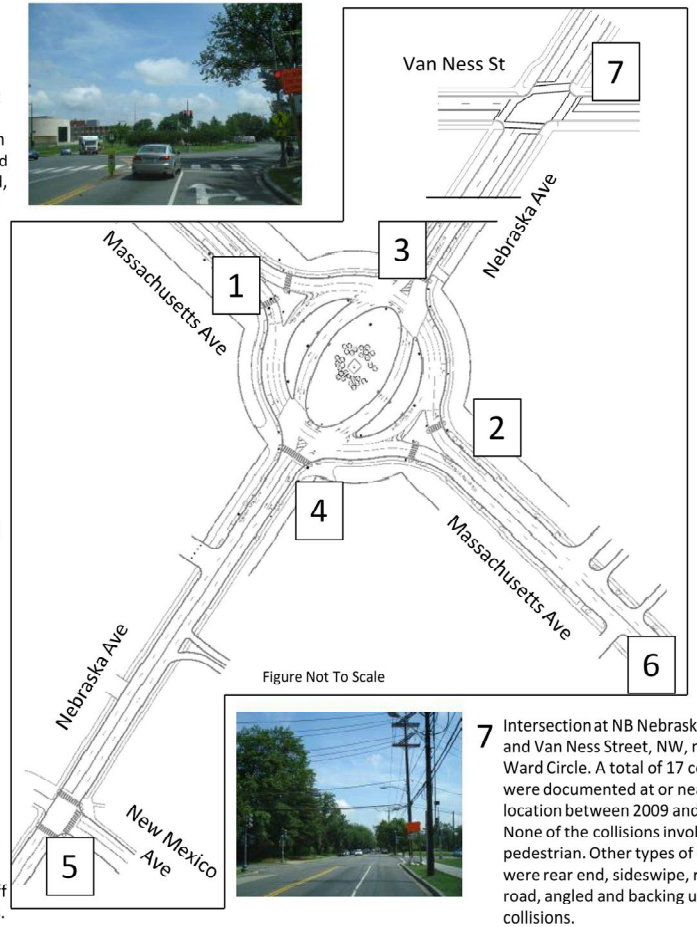

5 Signalized intersection of Nebraska Avenue and New Mexico Avenue south of Ward Circle. A total of 16 collisions were documented at or near this location between 2009 and 2011. One of the collisions involved a pedestrian, however other collision types were rear end, sideswipe, run off the road, angled, and backing up type collisions.

6 WB Massachusetts Avenue at entrance to Westover Place Apartments on left side of Ward Circle. Massachusetts Avenue entrance to DHA downstream on right. A total of 11 collisions were documented at or near this location between 2009 and 2011. One of the collisions involved a pedestrian. Other types of collisions were rear end, sideswipe, run of the road, angled and backing up type collisions.

7 Intersection at NB Nebraska Avenue and Van Ness Street, NW, north of Ward Circle. A total of 17 collisions were documented at or near this location between 2009 and 2011. None of the collisions involved a pedestrian. Other types of collisions were rear end, sideswipe, run off the road, angled and backing up type collisions.

Figure 3-8 | Ward Circle Collision Diagram (*Source: Precisions Systems Inc.*)

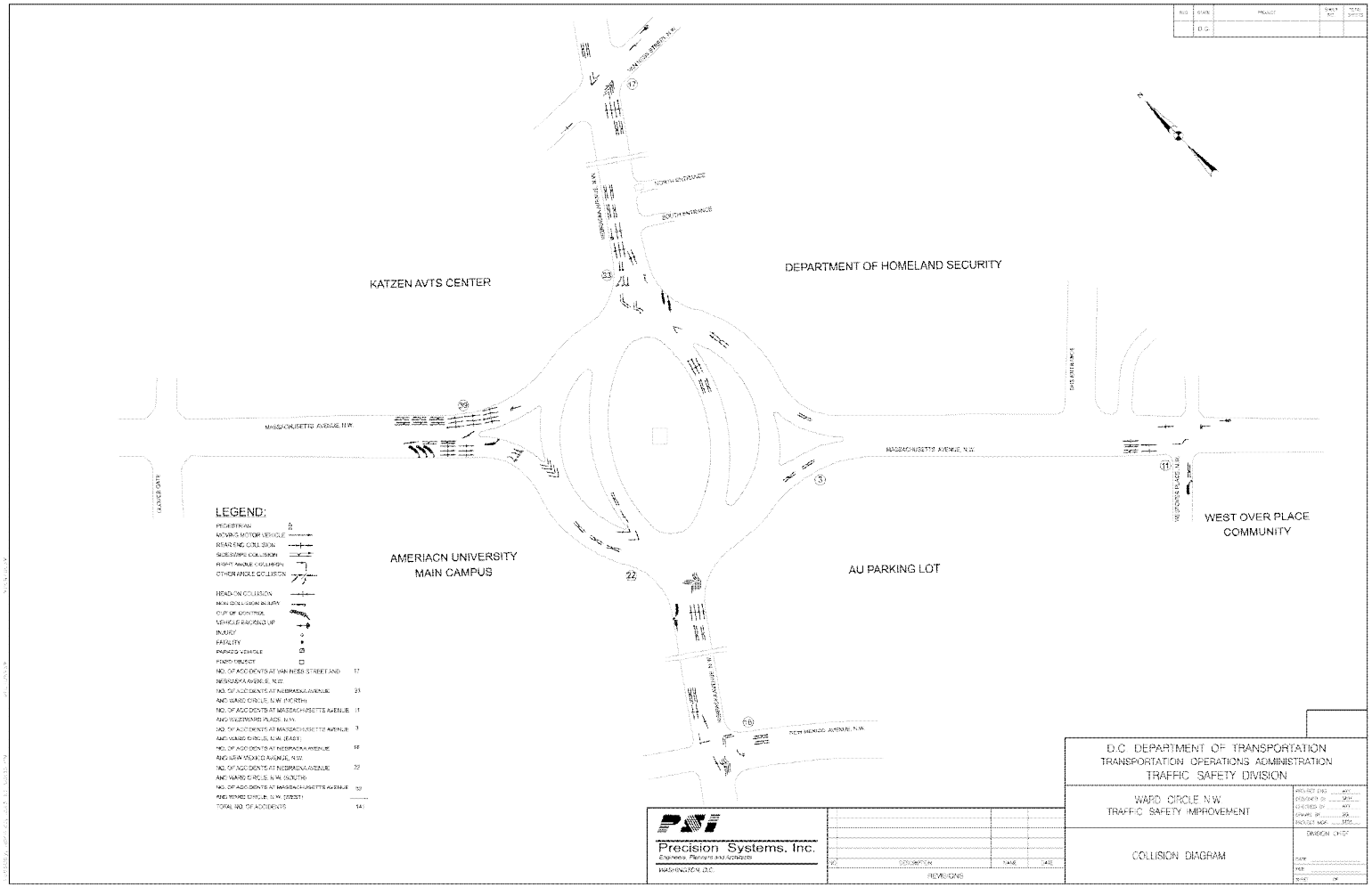

3.7. Existing Traffic Operations Analysis

Existing traffic operations were analyzed using the Synchro traffic model and the VISSIM microsimulation model (see Figure 3-7). DDOT provided the traffic signal information from the DDOT Citywide Synchro model for the AU study area. The Synchro model was then exported into the VISSIM model to be used as a basis of the existing conditions analysis. The VISSIM model was then refined to add existing traffic volumes for vehicles, pedestrians, bicycles and transit vehicles. The VISSIM model was calibrated based on observed existing traffic operations (volumes, travel times, and roadway queue lengths). The analysis of existing conditions followed the refinement of the VISSIM model.

The base model for the Circle was developed for existing morning and evening peak hours, specifically, 7:45-8:45 AM and 5:15-6:15 PM. Roadway network data were overlaid on aerial base maps. The roadway speeds were modeled on the posted speed limits. Traffic operations were modeled according to existing signage, lane markings, yield conditions and signal control conditions. Pedestrian movements were simulated at the sidewalks and pedestrian crosswalks. Existing traffic signals were modeled with DDOT timings from the Synchro model, which uses a pre-timed two-phased operation with a cycle length of 100 seconds for the morning and evening peak hours. The AU and Metro bus routes and headways were simulated in the VISSIM model based on the existing published schedules and headways. The VISSIM model also simulated existing traffic operations such as the illegal left turns at the inner circle and the aggressive driving behaviors characteristic of an urban environment.

Figure 3-7 | Existing Conditions as Modeled in the VISSIM Simulation Model (*Source: Parsons Brinckerhoff*)

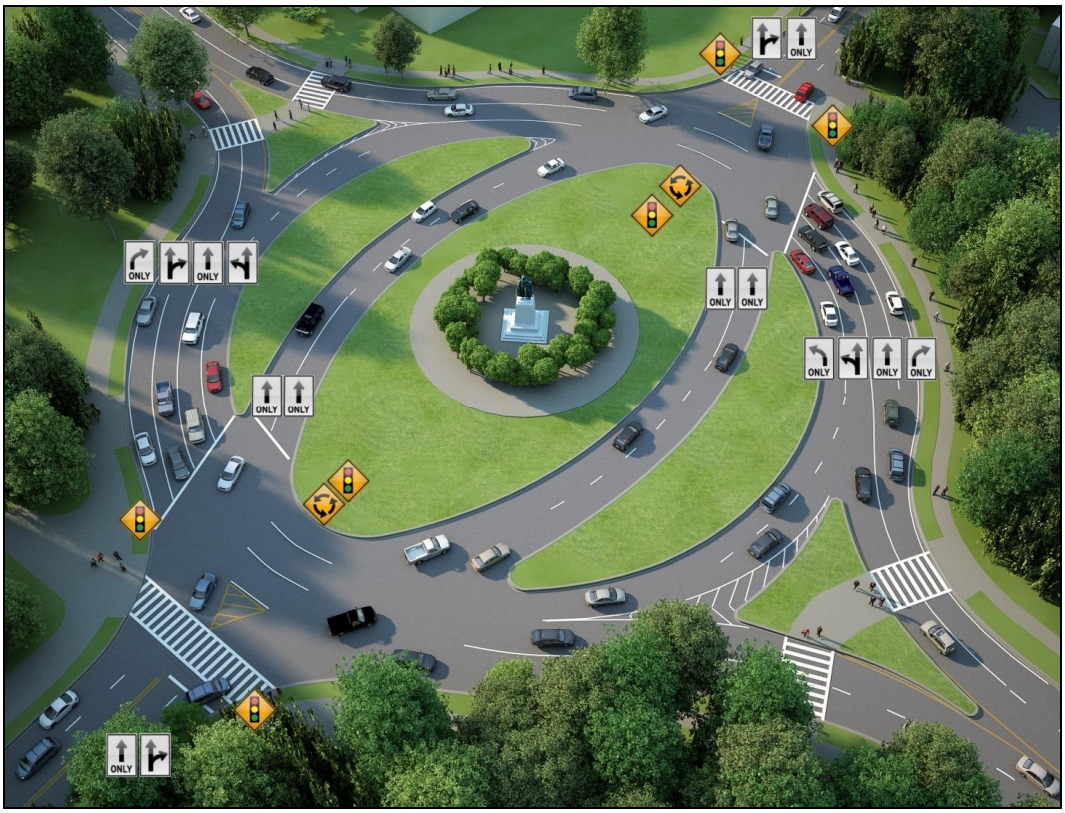

The existing conditions model was calibrated and validated based on visual field observations, and the GEH Methodology. The GEH Methodology[1] (G_H) is used in simulation modeling applications for calibration purposes. The methodology relies on a formula, similar to the Chi Test that is applied to traffic flow volumes.

The equation is:

$$G_H = \sqrt{\frac{2(m-c)^2}{m+c}}$$

Where:

[1]Wisconsin Department of Transportation and University of Wisconsin Traffic Operations & Safety Laboratory, http://www.wisdot.info/microsimulation/index.php?title=Model_Calibration#The_GEH_Formula

m is the traffic volume from the traffic model (vehicles per hour)

c is the real-world traffic count (vehicles per hour)

For individual traffic flows, the following rules of thumb can be applied using the GEH formula:

GEH less than 5.0	Acceptable fit, probably OK.
GEH between 5.0 and 10.0	Caution: possible model error or bad data.
GEH greater than 10.0	Warning: high probability of modeling error or bad data.

For the calibration to be considered acceptable, the GEH rating needs to be less than 5.0 for any location that is under study. This is particularly important for modeled links that represent points on a congested network or a roadway that is being considered for major reconfiguration.

For the GEH methodology to be effective, the micro-simulation model must meet the following criteria:

1. The modeled traffic volumes match the real-world volumes within acceptance thresholds.
2. The modeled travel times and speeds are similar to the actual ones.
3. The modeled travel patterns are realistic throughout the network.

Table 3-2 shows the criteria in three realism tests. The **bold** rows are the features that are relevant to the Ward Circle study area.

Table 3-2 | GEH Methodology Realism Test

Test	Criteria	Acceptance Targets
	Realism Test 1: Modeled Hourly Flows Compared with Observed Flows	
1.1.	$G_H < 5.0$	At least 85% of freeway and arterial mainline links.
1.2.	$G_H < 5.0$	At least 85% of entrance and exit ramps.
1.3.	**$G_H < 5.0$**	**At least 75% of intersection turn volumes.**
1.4.	Individual flows within ±400 vehicles per hour for flows exceeding 2,700 vehicles per hour.	At least 85% of applicable mainline links.
1.5.	$G_H < 4.0$ for total flows on screenlines.	All (or nearly all) screenlines.
1.6.	Total screenline flows (normally 5+ links) within ±5%.	All (or nearly all) screenlines.
	Realism Test 2: Travel Times and Speeds	
2.1.	**Modeled travel time within ±1 minute for routes with observed travel times less than 7 minutes.**	**At least 85% of routes.**
2.2.	Modeled travel time within ±15% for routes with observed travel times greater than 7 minutes.	At least 85% of routes.
2.3.	Travel speeds within ±10 mph.	At least 85% of mainline links.
	Realism Test 3: Travel Patterns	
3.1.	Routing check for 10 most important Origin-Destination pairs.	9 of 10 follow routes that a typical driver would use.
3.2.	**Visually realistic queuing patterns at intersections**	**Entire network.**

Test	Criteria	Acceptance Targets
	and congested links.	
3.3.	**Real-world bottlenecks replicated.**	**Entire network.**
3.4.	**Bottlenecks in locations where real-world bottlenecks do not exist.**	**None in entire network.**
3.5	Vehicles doubling back or making unrealistic U-turns.	None in entire network.
3.6.	Vehicles exiting and then re-entering a freeway, side-street, or driveway.	Rare or non-existent in entire network.
3.7.	Freeway lane choice.	Consistent with field conditions.
3.8.	Freeway merging.	Consistent with field conditions.
3.9.	Vehicle types and truck percentages.	Correct on freeway mainlines and for network as a whole. Arterial intersections correct if required to meet study goals.

Source: Wisconsin Department of Transportation

Table 3-3 shows the GEH Methodology results for existing conditions intersections in the morning and evening peak hours. Only one approach of one intersection held a GEH greater than 5.0. The majority of the intersections held a GEH less than 5.0, which met the criteria.

Table 3-3 | GEH Methodology Results

Intersection	Balanced	Volume Direction	Simulated	GEH GEH <5.0
AM Peak Hour				
Massachusetts (E-W) Ave & AU Driveway	2121	All	2124	0.07
Massachusetts (E-W) Ave & DHS Driveway	2132	All	2081	1.11
Nebraska (N-S) Ave & AU Parking Lot	1272	All	1239	0.93
Nebraska (N-S) Ave & New Mexico Ave	2674	All	2646	0.54
Massachusetts (E-W) Ave & Berkshire Apts	2079	All	2084	0.11
Massachusetts (E-W) Ave (East End of Ward Circle)	2201	All	2178	0.49
Massachusetts (E-W) Ave (West End of Ward Circle)	2069	All	2068	0.02
Nebraska (N-S) Ave (South End of Ward Circle)	3684	All	3644	0.66
Nebraska (N-S) Ave (North End of Ward Circle)	2971	All	2962	0.17
Nebraska (N-S) Ave and DHS (North Driveway) /Church Driveway	2211	All	2209	0.04
Nebraska (N-S) Ave & DHS (South Driveway)	2147	All	2147	0.00
PM Peak Hour				
Massachusetts (E-W) Ave & AU Driveway	2304	All	2171	2.81
Massachusetts (E-W) Ave & DHS Driveway	2009	All	1798	4.84
Nebraska (N-S) Ave & AU Parking Lot	1186	All	1198	0.35
Nebraska (N-S) Ave & New Mexico Ave	2596	All	2584	0.24
Massachusetts (E-W) Ave & Berkshire Apts	1890	All	1748	3.33
Massachusetts (E-W) Ave (East End of Ward Circle)	2161	All	2047	2.49
Massachusetts (E-W) Ave (West End of Ward Circle)	2113	All	1970	3.16
Nebraska (N-S) Ave (South End of Ward Circle)	3185	All	3188	0.05
Nebraska (N-S) Ave (North End of Ward Circle)	3308	All	3208	1.75
Nebraska (N-S) Ave and DHS (North Driveway) /Church Driveway	2081	All	2110	0.63
Nebraska (N-S) Ave & DHS (South Driveway)	2025	All	2054	0.64

Figure 3-8 | VISSIM Screen Shot of Existing Traffic Operations Model (*Source: Parsons Brinckerhoff*)

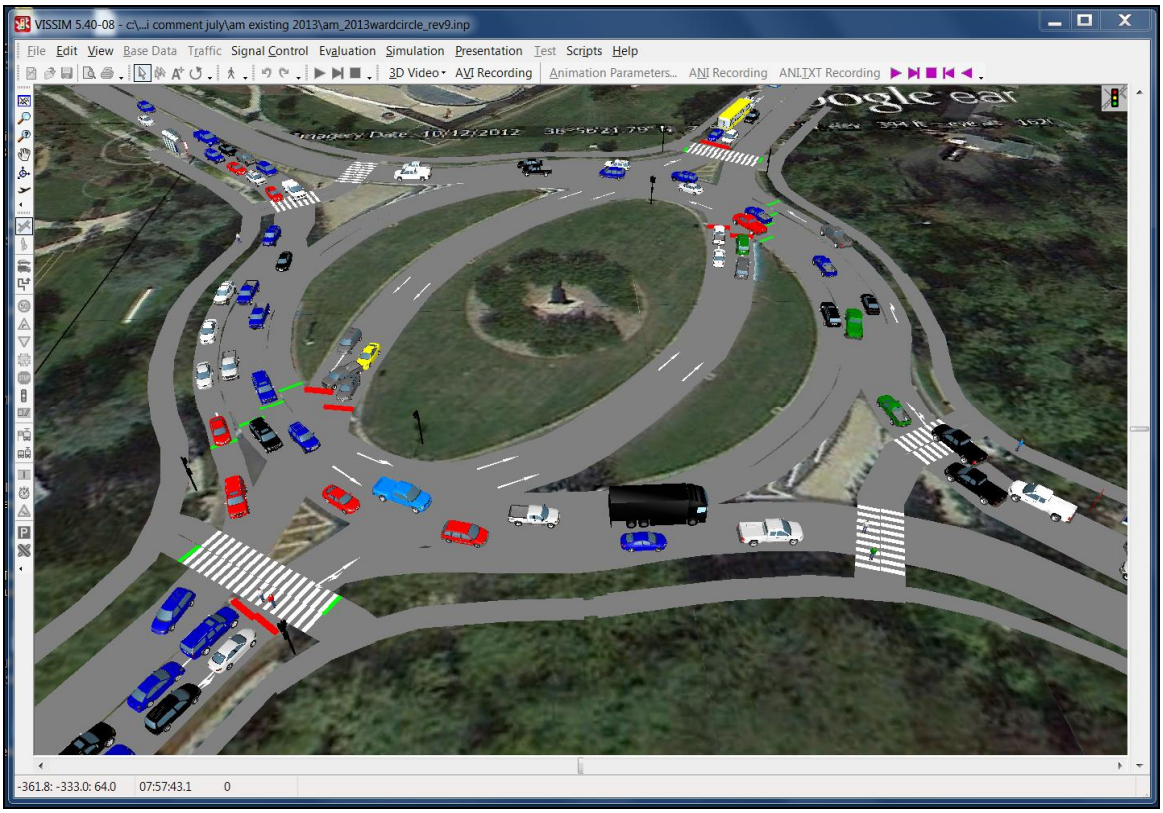

The VISSIM Modeling results for the existing traffic operations are shown below.

Table 3-4 | LOS Results of Existing Traffic Conditions

Intersection	Delay (s) Stopped	Delay (s) Avg	Queue Length (ft) Avg	Queue Length (ft) Max	LOS
AM Peak Hour					
Massachusetts (E-W) Ave & AU Driveway	15.6	25.5	37.3	451.6	C
Massachusetts (E-W) Ave & DHS Driveway	0.1	1.0	0.4	179.0	A
Nebraska (N-S) Ave & AU Parking Lot	15.3	27.2	49.5	337.7	C
Nebraska (N-S) Ave & New Mexico Ave	16.4	26.7	50.3	671.3	C
Massachusetts (E-W) Ave & Berkshire Apts	2.6	5.7	10.1	396.6	A
Massachusetts (E-W) Ave (East End of Ward Circle)	1.7	3.2	0.3	108.2	A
Massachusetts (E-W) Ave (West End of Ward Circle)	6.1	8.7	2.4	64.5	A
Nebraska (N-S) Ave (South End of Ward Circle)	23.1	31.0	85.4	467.2	C
Nebraska (N-S) Ave (North End of Ward Circle)	16.5	21.6	47.9	327.1	C
Nebraska (N-S) Ave and DHS (North Driveway) /Church Driveway	3.4	8.9	8.6	358.1	A

Ward Circle NW

Intersection	Delay (s) Stopped	Delay (s) Avg	Queue Length (ft) Avg	Queue Length (ft) Max	LOS
Nebraska (N-S) Ave & DHS (South Driveway)	6.9	11.9	19.1	315.8	B
PM Peak Hour					
Massachusetts (E-W) Ave & AU Driveway	14.5	21.7	40.1	386.6	C
Massachusetts (E-W) Ave & DHS Driveway	23.6	46.5	127.7	659.5	D
Nebraska (N-S) Ave & AU Parking Lot	0.4	2.9	0.3	105.4	A
Nebraska (N-S) Ave & New Mexico Ave	14.1	21.0	47.1	828.1	C
Massachusetts (E-W) Ave & Berkshire Apts	13.1	32.0	48.9	385.8	C
Massachusetts (E-W) Ave (East End of Ward Circle)	7.8	10.8	7.0	259.9	B
Massachusetts (E-W) Ave (West End of Ward Circle)	2.7	4.7	1.0	69.4	A
Nebraska (N-S) Ave (South End of Ward Circle)	16.7	23.4	55.0	439.2	C
Nebraska (N-S) Ave (North End of Ward Circle)	16.1	21.3	51.0	290.7	C
Nebraska (N-S) Ave and DHS (North Driveway) /Church Driveway	1.1	5.5	2.8	271.1	A
Nebraska (N-S) Ave & DHS (South Driveway)	2.8	6.1	3.9	249.1	A

The capacity analysis results show that the intersections in the Ward Circle study area operate at acceptable levels of service (LOS A-D). However, individual approaches to the intersection experience delays and associating queuing that result in less than acceptable, even failing, levels of service. Those approaches include:

1. The northbound Nebraska Avenue, NW at Ward Circle South intersection operating at LOS E at 55 average seconds of delay during the morning peak hour.
2. The westbound Massachusetts Avenue, NW at the Berkshire Apartments Driveway operating at LOS E at 55 average seconds of delay during the morning peak hour, and
3. The westbound Massachusetts Avenue NW approach at the DHS Driveway operating at LOS F at 81 average seconds of delay during the evening peak hour.

4.0 Alternatives Development

This section describes the alternatives that were developed to address the safety and operational issues at Ward Circle.

Several alternatives were developed and tested as to fitness for the Ward Circle. The alternatives are as follows:

- Alternative #1 – Ward Circle as a roundabout
- Alternative #2 – Ward Circle as a bi-furcated intersection
- Alternative #3 – Ward Circle as a 4-leg intersection
- Alternative #4 – Ward Circle as a fully signalized traffic circle

Another alternative that were considered included a grade-separated intersection, where Massachusetts Avenue NW tunneled under Ward Circle. This alternative represented the best case scenario from an infrastructure perspective, as it would minimize vehicle and pedestrian conflicts by removing significant number of vehicles from the turning movements at Ward Circle. However, the costs for constructing this alternative and the limited right-of-way available at the circle due to the existing and proposed land uses made this alternative infeasible.

4.1. Alternative 1 - Roundabout

For this alternative, Ward Circle would function as a true rotary. The Nebraska Avenue through lanes would be removed from the center of the circle. Thus, no left turns would occur from the center of the circle. All vehicles entering the circle would have to circumnavigate the circle in order to execute turns or to go through the circle. The circle would have three lanes in the circle, with the exception of the northwest and southeast quadrants of the circle, which would have four lanes where the fourth lane is a dedicated turn lane from Massachusetts Avenue NW to Nebraska Avenue NW.

The circle's approaches at Massachusetts Avenue and Nebraska Avenue would be signalized to reduce potential for vehicle-pedestrian conflicts. The signal would operate in four-phase

operation, with each approach receiving time to operate without impacting or conflicting with other movements. The total cycle length for the signals at the Circle is 100 seconds.

Pedestrians would cross the intersection at the signalized crosswalks. Pedestrians would have 43 seconds of crossing the Nebraska Avenue NW approaches to the Circle, and 43 seconds of crossing the Massachusetts Avenue NW approaches to the Circle. Figure 4-1 shows the roundabout alternative considered as part of this study.

Figure 4-1 | Roundabout Alternative (*Source: Parsons Brinckerhoff*)

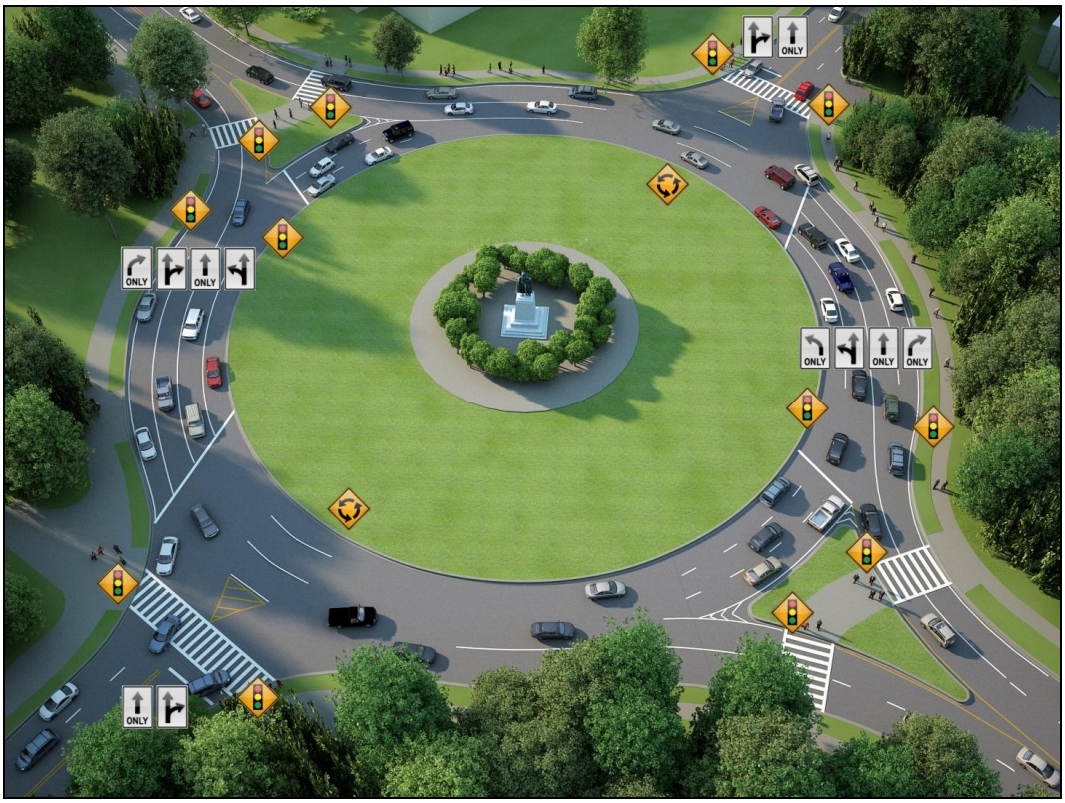

4.2. Alternative 2 - Bi-furcated Intersection

The existing configuration of Ward Circle would be revised so that the eastern and western sections of the circle would be removed. Vehicles would have to use the Nebraska Avenue through lanes in order to execute turn movements. The lanes of the eastern and western sections of the circle would be converted to green space, thus providing more opportunities for park usage by AU population and the surrounding community. The intersection would have

three lanes on Nebraska Avenue NW, where the leftmost lane would act principally as a left turn only lane and a shared left and through lane to accommodate the increased turns due to the revised configuration. The northwest and southeast quadrants of the circle would have four lanes where the fourth lane is a dedicated turn lane from Massachusetts Avenue NW to Nebraska Avenue NW.

All approaches to the intersection would be signalized. The signal would operate in two-phase operation: Nebraska Avenue NW then Massachusetts Avenue NW. The total cycle length for the signals at the Circle is 100 seconds.

Pedestrians would cross the intersection at the signalized crosswalks. Pedestrians would have 23 seconds of crossing the Nebraska Avenue NW approaches to the Circle, and 30 seconds of crossing the Massachusetts Avenue NW approaches to the Circle. Figure 4-2 shows the bi-furcated intersection alternative considered as part of this study.

Figure 4-2 | Bi-furcated Intersection Alternative (*Source: Parsons Brinckerhoff*)

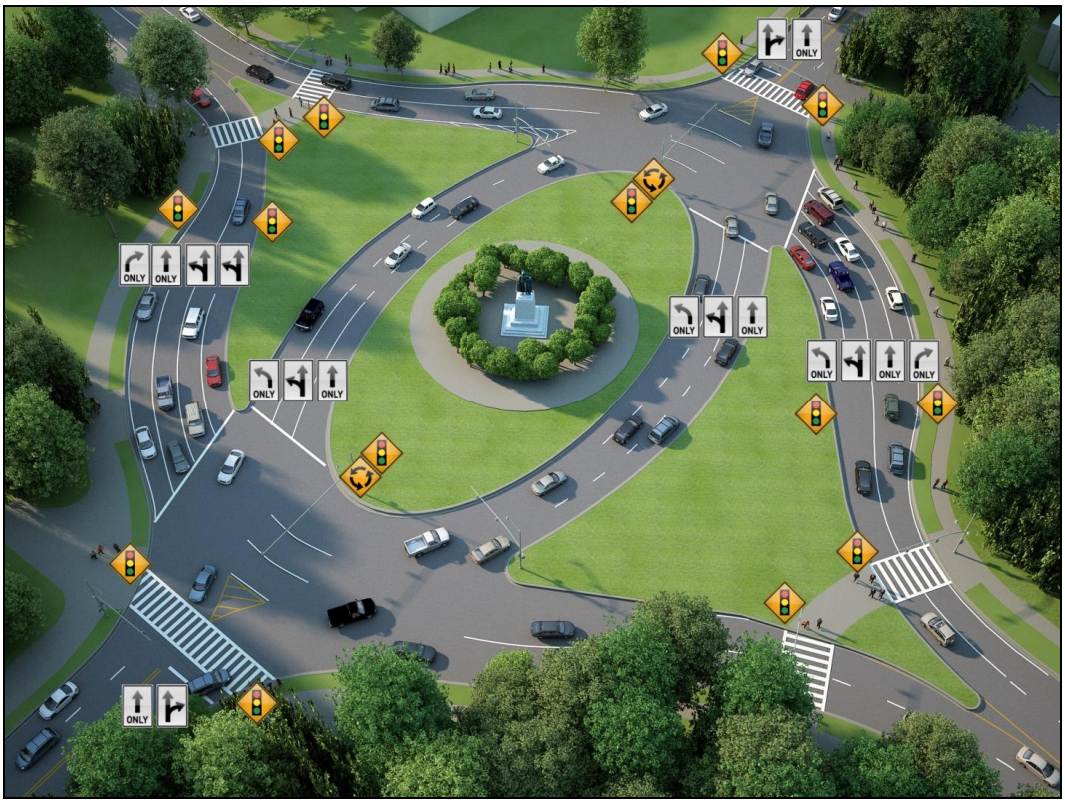

4.3. Alternative 3 - 4-leg Intersection

Ward Circle would convert to a typical 4-legged intersection. Thus, the Circle and the Ward statue would be eliminated. However, the removal of the lanes of the circle could be converted to green space and the status can be relocated to a suitable space. The roadways at the intersection would have two lanes in each direction, along with a dedicated right turn at each approach. The outside lane of the circle in each quadrant would remain to serve as a possible location for the Metro bus and AU shuttle bus stops thus relocating the bus stops from the main roadways. The area can also be used for drop-offs and pick up locations for adjacent facilities.

All approaches to the intersection would be signalized. The signal would operate in three-phase operation: Nebraska Avenue NW then split phases for Massachusetts Avenue, eastbound then westbound. The total cycle length for the signals at the Circle is 105 seconds.

Pedestrians would cross not at the signalized crosswalks at the intersection but at the current locations at the edges of the Circle. Sidewalks would remain adjacent to the former Circle and can be used for pedestrians and bicyclists. Pedestrian crossings would be unsignalized. Figure 4-3 shows the 4-legged intersection alternative considered as part of this study.

Figure 4-3 | 4-Leg Intersection Alternative (*Source: Parsons Brinckerhoff*)

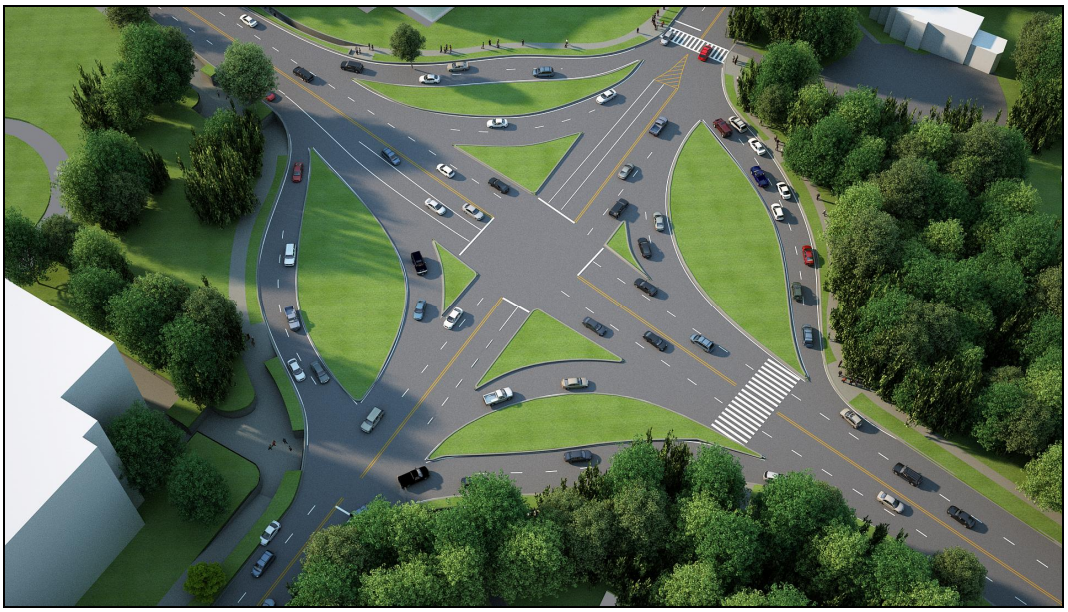

Ward Circle NW

4.4. Alternative 4 – Fully Signalized Traffic Circle

The existing configuration of Ward Circle would remain as it is, and Massachusetts Avenue NW approaches would be signalized. The number of lanes within the Circle would be as they are today, varying from two lanes adjacent to the Massachusetts Avenue NW entries, and three lanes adjacent to the Nebraska Avenue NW entries.. The northwest and southeast quadrants of the circle would have four lanes where the fourth lane is a dedicated turn lane from Massachusetts Avenue NW to Nebraska Avenue NW.

All approaches to the intersection would be signalized. The signal would operate in three-phase operation: Nebraska Avenue NW then split phases for Massachusetts Avenue, eastbound then westbound. The total cycle length for the signals at the Circle is 105 seconds.

Pedestrians would cross the intersection at the signalized crosswalks. Pedestrians would have 23 seconds of crossing the Nebraska Avenue NW approaches to the Circle, and 33 seconds of crossing the Massachusetts Avenue NW approaches to the Circle. Figure 4-4 shows the fully signalized traffic circle alternative considered as part of this study.

Figure 4-4 | Fully Signalized Traffic Circle Alternative (*Source: Parsons Brinckerhoff*)

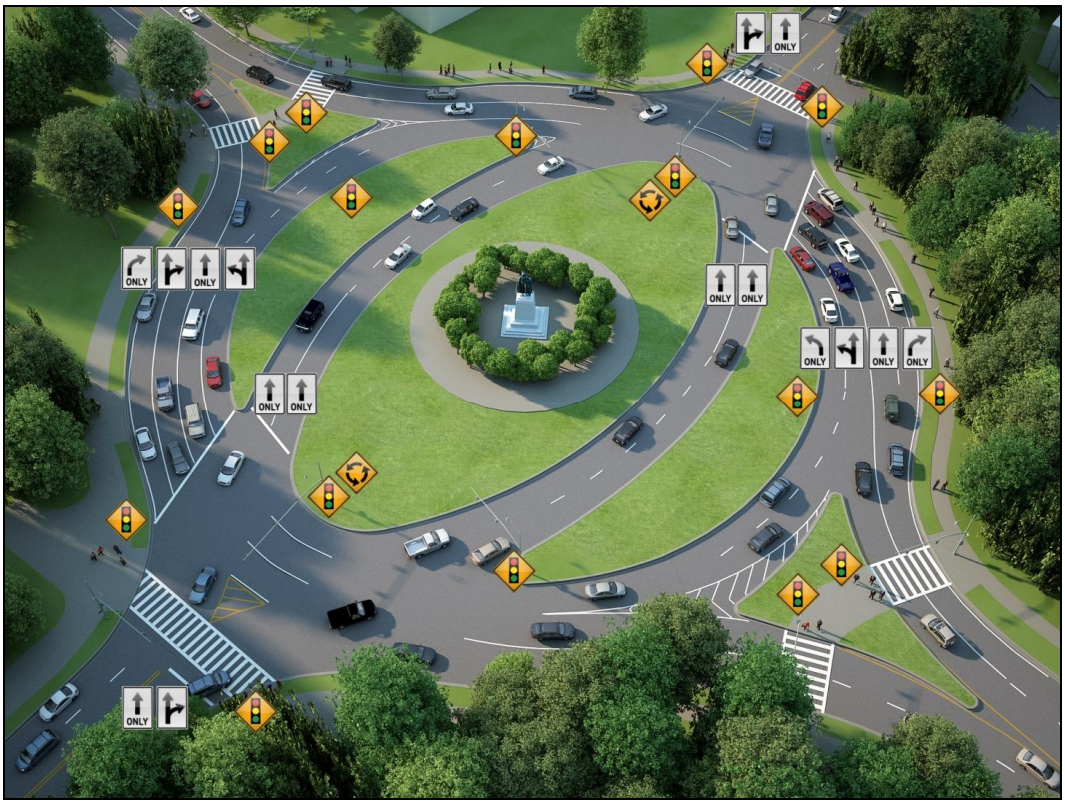

A comparison of the alternatives is listed in Table 4-1.

Table 4–1 | Comparison of Alternatives

Alternative	Pros	Cons
Alternative #1 – Roundabout	• Functions as traffic circle similar to other circles in the city • Increased green space for recreational uses • weaving and merging movements minimize as through lanes are removed • No illegal left turns will be available from the center through lanes • Pedestrians crossing Mass Ave approaches have signalized entry into cross walks, minimizing pedestrian-vehicle conflicts	• Queuing during the peak hours would disrupt normal roundabout operation
Alternative #2 – Bi-furcated Intersection	• Increased green space for recreational uses	• Queuing in the Nebraska Ave through lanes, due to increases

Alternative	Pros	Cons
	• Weaving and merging is reduced due to elimination of circle lanes • Illegal left turn movements are now legal and necessary • Signalized pedestrian crosswalks minimize pedestrian-vehicle conflicts	in turn movement volumes as a result of removal of circle lanes can disrupt normal flow of operation at the intersections
Alternative #3 – 4-leg intersection	• Intersection operation would improve in comparison to a traffic circle or roundabout • Weaving and merging issues within the circle would be eliminated • Potential new bus stop areas in former Circle roadways removes bus stop delays from the main roadways	• Would need approval from the NPS • Reduction of green space for recreational uses • Volumes cannot be fully processed through a signalized intersection • Location of crosswalks in current locations would still contribute to vehicle-pedestrian conflicts
Alternative #4 –Fully Signalized Traffic Circle	• Vehicle-pedestrian conflicts on Massachusetts Avenue NW would be reduced due to the addition of signalized crosswalks • Minimal infrastructure changes are needed	• Weaving and merging issues may still exist

4.5. Alternatives Analysis

Alternatives were analyzed using the VISSIM simulation model. The calibrated existing conditions model was used as a base for the models developed for each alternative. The models were developed for the morning and evening peak hours, which for the purposes of the simulation model was 7:45-8:45AM and 5:15-6:15PM. The roadway network was development over graphic aerials. The roadway speeds were modeled per the posted speed limits. The American University and Metro Bus Lines routes and headways were simulated in each alternative model. Traffic operations such as the aggressive driving behavior characteristic of an urban environment were simulated in the model. However, the illegal left turns at the inner circle were not modeled in the alternative models.

For the purposes of the study, the existing traffic volumes were used in the models for each of the alternatives. The measures of effectiveness (MOE) for the alternatives were compared to the existing conditions analysis results.

Appendix C contains the detailed results of the VISSIM Simulation Model analysis for all alternatives.

4.5.1. Alternative 1 - Roundabout

Summary of traffic operations for roundabout is shown in Table 4-2. Capacity analyses show the Circle operates at acceptable levels of services, ranging from LOS A to LOS D, in both the morning and evening peak hours. Outside of the Circle, intersection operations were at unacceptable levels – LOS E and F – at all intersections along Massachusetts Avenue NW in both peak hours and at Nebraska Avenue NW /Nebraska Avenue Complex (NAC) driveway in the evening peak hour.

Figure 4-5 | Snapshot of Roundabout Alternative Simulation Model (*Source: Parsons Brinckerhoff*)

Table 4-2 | Results of Roundabout Simulation Modeling Results

Intersection	Delay (s) Stop	Delay (s) Avg	Queue Length (ft) Avg	Queue Length (ft) Max	LOS
AM Peak Hour					
Massachusetts (E-W) Ave & AU Driveway	102.4	126.3	111.0	518.0	F
Massachusetts (E-W) Ave & DHS Driveway	76.3	104.3	190.2	683.7	F
Nebraska (N-S) Ave & AU Parking Lot	28.8	45.9	70.6	357.3	D
Nebraska (N-S) Ave & New Mexico Ave	30.9	44.0	76.5	445.8	D
Massachusetts (E-W) Ave & Berkshire Apts	74.9	106.1	85.8	393.2	F
Massachusetts (E-W) Ave (East End of Ward Circle)	0.0	0.3	0.0	0.0	A
Massachusetts (E-W) Ave (West End of Ward Circle)	0.0	0.4	0.2	25.8	A
Nebraska (N-S) Ave (South End of Ward Circle)	24.0	30.2	107.5	456.6	C
Nebraska (N-S) Ave (North End of Ward Circle)	15.2	18.8	54.6	276.1	B
Nebraska (N-S) Ave and DHS (North Driveway) /Church Driveway	21.7	42.1	51.6	428.3	D
Nebraska (N-S) Ave & DHS (South Driveway)	29.1	39.0	52.1	317.6	D
PM Peak Hour					
Massachusetts (E-W) Ave & AU Driveway	79.0	101.4	127.4	484.1	F
Massachusetts (E-W) Ave & DHS Driveway	92.6	120.3	210.7	683.5	F
Nebraska (N-S) Ave & AU Parking Lot	43.1	66.2	105.6	392.7	E
Nebraska (N-S) Ave & New Mexico Ave	37.3	53.9	67.9	443.5	D
Massachusetts (E-W) Ave & Berkshire Apts	73.8	108.5	90.2	394.8	F
Massachusetts (E-W) Ave (East End of Ward Circle)	0.0	0.4	0.0	0.0	A
Massachusetts (E-W) Ave (West End of Ward Circle)	0.0	0.4	0.0	23.6	A
Nebraska (N-S) Ave (South End of Ward Circle)	25.6	32.2	108.3	455.1	C
Nebraska (N-S) Ave (North End of Ward Circle)	17.5	22.5	59.1	275.9	C
Nebraska (N-S) Ave and DHS (North Driveway) /Church Driveway	34.6	61.3	62.7	431.6	E
Nebraska (N-S) Ave & DHS (South Driveway)	38.7	49.8	67.6	322.6	D

From the simulation model results, congestion and queuing occurred on all roadway approaches to the Circle, with queues extending beyond to the next intersections. Average queue lengths on Nebraska Avenue NW ranged from 50 feet to 100 feet, and maximum queue lengths ranged from 200 feet to 400 feet. Outside of the Circle, queuing occurred on eastbound Massachusetts Avenue at the Katzen Arts Center, and at westbound Massachusetts Avenue at the NAC driveway and the Berkshire Apartments. Queues extended back beyond the preceding intersection on northbound Nebraska Avenue NW at New Mexico Avenue, and on southbound Nebraska Avenue NW at the NAC driveway entrances.

During the evening peak hour, congestion and queuing occurred on all approaches to the Circle, with queues extending back to the previous intersections. Average queue lengths on Nebraska Avenue NW ranged from 50 feet to 100 feet, and maximum queue lengths ranged from 200 feet to 400 feet. Outside of the Circle, queuing occurred roadways approaching the Circle as

well as driveway exits onto the Nebraska and Massachusetts Avenue NW. Queuing occurred on eastbound Massachusetts Avenue at the Katzen Arts Center, and at westbound Massachusetts Avenue at the NAC driveway and the Berkshire Apartments. Queues extended back beyond the preceding intersection on northbound Nebraska Avenue NW at New Mexico Avenue, and on southbound Nebraska Avenue NW at the NAC driveway entrances.

4.5.2. Alternative 2 - Bi-furcated Intersection

Summary of traffic operations for bi-furcated intersection is shown in Table 4-3. Capacity analyses show the Circle operates at acceptable levels of services, ranging from LOS A to LOS D, in both the morning and evening peak hours. Outside of the Circle, intersection operations ranged from LOS A to LOS E at intersections along Massachusetts Avenue NW in both peak hours. For Nebraska Avenue NW, intersection operations ranged from LOS B to LOS D during the morning and evening peak hours.

Figure 4-6 | Snapshot of Bi-furcated Intersection Alternative Simulation Model (*Source: Parsons Brinckerhoff*)

Table 4-3 | Results of Bi-furcated Intersection Simulation Modeling Results

Intersection	Delay (s) Stop	Delay (s) Avg	Queue Length (ft) Avg	Queue Length (ft) Max	LOS
AM Peak Hour					
Massachusetts (E-W) Ave & AU Driveway	47.6	63.7	78.1	523.1	E
Massachusetts (E-W) Ave & DHS Driveway	7.1	10.7	12.5	360.0	B
Nebraska (N-S) Ave & AU Parking Lot	47.3	72.0	131.3	385.2	E
Nebraska (N-S) Ave & New Mexico Ave	36.5	51.9	96.9	438.2	D
Massachusetts (E-W) Ave & Berkshire Apts	2.9	5.5	7.4	202.0	A
Massachusetts (E-W) Ave (East End of Ward Circle)	0.7	1.7	0.0	29.3	A
Massachusetts (E-W) Ave (West End of Ward Circle)	1.8	2.8	0.0	29.4	A
Nebraska (N-S) Ave (South End of Ward Circle)	38.1	47.2	125.4	467.3	D
Nebraska (N-S) Ave (North End of Ward Circle)	25.2	31.4	58.8	275.5	C
Nebraska (N-S) Ave and DHS (North Driveway) /Church Driveway	5.7	13.6	23.8	456.3	B
Nebraska (N-S) Ave & DHS (South Driveway)	16.6	24.6	29.9	321.4	C
PM Peak Hour					
Massachusetts (E-W) Ave & AU Driveway	10.5	15.8	27.0	272.2	B
Massachusetts (E-W) Ave & DHS Driveway	48.8	61.9	125.2	656.9	E
Nebraska (N-S) Ave & AU Parking Lot	47.3	72.8	115.5	321.0	E
Nebraska (N-S) Ave & New Mexico Ave	29.8	41.7	60.2	455.0	D
Massachusetts (E-W) Ave & Berkshire Apts	10.7	18.5	24.9	386.9	B
Massachusetts (E-W) Ave (East End of Ward Circle)	1.5	2.8	0.3	52.3	A
Massachusetts (E-W) Ave (West End of Ward Circle)	0.1	0.8	0.0	25.5	A
Nebraska (N-S) Ave (South End of Ward Circle)	35.5	43.9	114.3	467.2	D
Nebraska (N-S) Ave (North End of Ward Circle)	28.9	35.5	73.7	335.4	D
Nebraska (N-S) Ave and DHS (North Driveway) /Church Driveway	23.0	46.7	56.6	431.8	D
Nebraska (N-S) Ave & DHS (South Driveway)	28.8	39.8	57.3	315.8	D

From the simulation model results, congestion during the morning peak hour occurred on Nebraska Avenue NW in the peak direction, traveling northbound, and on Massachusetts Avenue NW traveling eastbound. On Nebraska Avenue NW approach south of the Circle, average queues were approximately 100 feet and maximum queues were 400 feet. On eastbound Massachusetts Avenue NW, average queues were approximately 30 feet. In the Nebraska Avenue through lanes in the middle of the circle, queue lengths did extend back into the intersections of the Circle, mostly due to vehicles turning from the Massachusetts Avenue lanes. The queues did clear quickly once green time was made available to the through lanes.

Outside of the Circle, queuing occurred on eastbound Massachusetts Avenue at the Katzen Arts Center, and on northbound Nebraska Avenue NW at New Mexico Avenue NW.

During the evening peak hour, congestion and queuing occurred on all approaches to the Circle, with queues extending back to the previous intersections. Average queue lengths on Nebraska Avenue NW ranged from 70 feet to 100 feet, and maximum queue lengths ranged from 300 feet to 400 feet. Outside of the Circle, queuing occurred on the roadways approaching the Circle as well as driveway exits onto Nebraska and Massachusetts Avenues. Queuing occurred on westbound Massachusetts Avenue at the NAC driveway and the Berkshire Apartments. Queues extended back beyond the preceding intersection on southbound Nebraska Avenue NW at the NAC driveway entrances.

4.5.3. Alternative 3 - 4-leg Intersection

Summary of traffic operations for 4-leg intersection is shown in Table 4-4. Capacity analyses reveal the intersection operates at LOS B in both the morning and evening peak hours. Adjacent intersections operate at acceptable levels of service, ranging from LOS A to LOS D at intersections along Massachusetts Avenue NW and Nebraska Avenue NW in both peak hours.

Figure 4-7 | Snapshot of 4-leg Intersection Alternative Simulation Model (*Source: Parsons Brinckerhoff*)

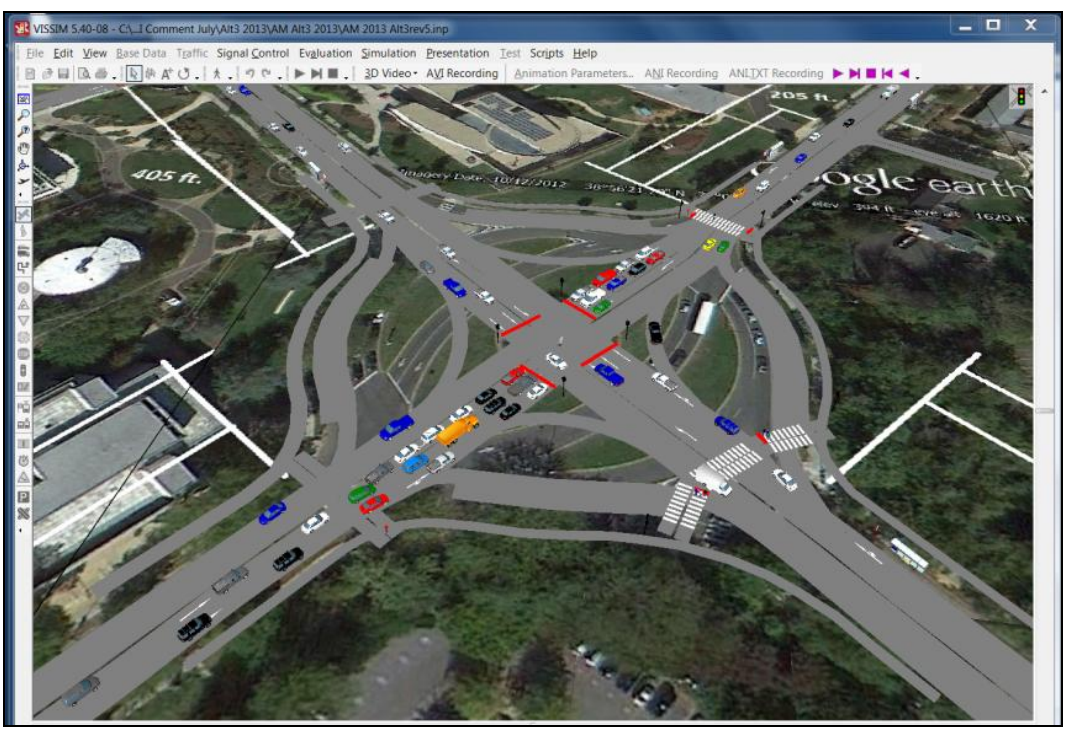

Table 4-4 | Results of 4-leg Intersection Simulation Modeling Results

Intersection	Delay (s) Stop	Delay (s) Avg	Queue Length (ft) Avg	Queue Length (ft) Max	LOS
AM Peak Hour					
Massachusetts (E-W) Ave & AU Driveway	5.2	8.7	14.4	295.0	A
Massachusetts (E-W) Ave & DHS Driveway	0.2	0.7	0.3	173.2	A
Nebraska (N-S) Ave & AU Parking Lot	23.4	48.1	93.2	390.1	D
Nebraska (N-S) Ave & New Mexico Ave	29.3	44.3	93.4	778.1	D
Massachusetts (E-W) Ave & Berkshire Apts	1.4	2.9	4.3	181.3	A
Nebraska (N-S) Ave and DHS (North Driveway) /Church Driveway	1.1	5.4	3.5	276.3	A
Nebraska (N-S) Ave & DHS (South Driveway)	0.2	1.8	0.3	156.6	A
Massachusetts (E-W) Ave. & Nebraska (N-S) Ave.	10.2	12.7	43.4	214.2	B
PM Peak Hour					
Massachusetts (E-W) Ave & AU Driveway	7.8	12.1	21.5	230.0	B
Massachusetts (E-W) Ave & DHS Driveway	0.2	1.3	0.0	29.6	A
Nebraska (N-S) Ave & AU Parking Lot	4.5	10.4	18.7	335.1	B
Nebraska (N-S) Ave & New Mexico Ave	13.8	22.4	41.4	520.6	C
Massachusetts (E-W) Ave & Berkshire Apts	2.1	3.9	6.4	230.3	A
Nebraska (N-S) Ave and DHS (North Driveway) /Church Driveway	1.0	4.9	2.3	194.5	A
Nebraska (N-S) Ave & DHS (South Driveway)	0.2	1.2	0.4	174.6	A
Massachusetts (E-W) Ave. & Nebraska (N-S) Ave.	9.7	12.5	36.2	197.2	B

From the simulation model results, the 4-leg intersection of Massachusetts and Nebraska Avenues operated at acceptable capacities. In the morning peak hour, average queue lengths on Nebraska Avenue NW ranged from 10 feet to 120 feet and maximum queues lengths ranged from 100 feet to 200 feet. On Massachusetts Avenue NW, the average queue lengths did not exceed 40 feet, and the maximum queue lengths ranged from 100 feet to 200 feet. The storage capacity in the dedicated left turn lanes on all approaches, which were 100 feet on all approaches, was exceeded in the morning peak hour, particularly on northbound Nebraska Avenue NW where the maximum queue length was recorded at over 200 feet. In the evening peak hour, average queue lengths on Nebraska Avenue NW ranged from 15 feet to 85 feet and maximum queues lengths were approximately 200 feet. On Massachusetts Avenue NW, the average queue lengths did not exceed 45 feet, and the maximum queue lengths ranged from 110 feet to 190 feet. The storage capacity in the dedicated left turn lanes on all approaches also was exceeded in the evening peak hour, particularly on northbound Nebraska Avenue NW.

Queue lengths on Nebraska Avenue NW south of the intersection exceeded the length of the intersections during the morning peak hour. Queue lengths extended beyond the New Mexico

Avenue NW intersection. Queue lengths in the evening peak hour did not exceed intersections lengths.

4.5.4. Alternative 4 – Fully Signalized Traffic Circle

Summary of traffic operations for fully signalized traffic circle is shown in Table 4-5. Summary of traffic operations for this alternative is shown in Table 4-4. Capacity analyses reveal the intersections at the Circle operate at acceptable levels of service in both the morning and evening peak hours. Adjacent intersections operate at acceptable levels of service, ranging from LOS A to LOS C at intersections along Massachusetts Avenue NW in both morning and afternoon peak hours. The Nebraska Avenue NW intersections operate at LOS A to LOS D in both peak hours, with the exception of the intersections of New Mexico Avenue NW and AU Parking Lot entrance which operates at LOS E in the morning peak hour.

Figure 4-8 | Snapshot of Fully Signalized Traffic Circle Alternative Simulation Model (*Source: Parsons Brinckerhoff*)

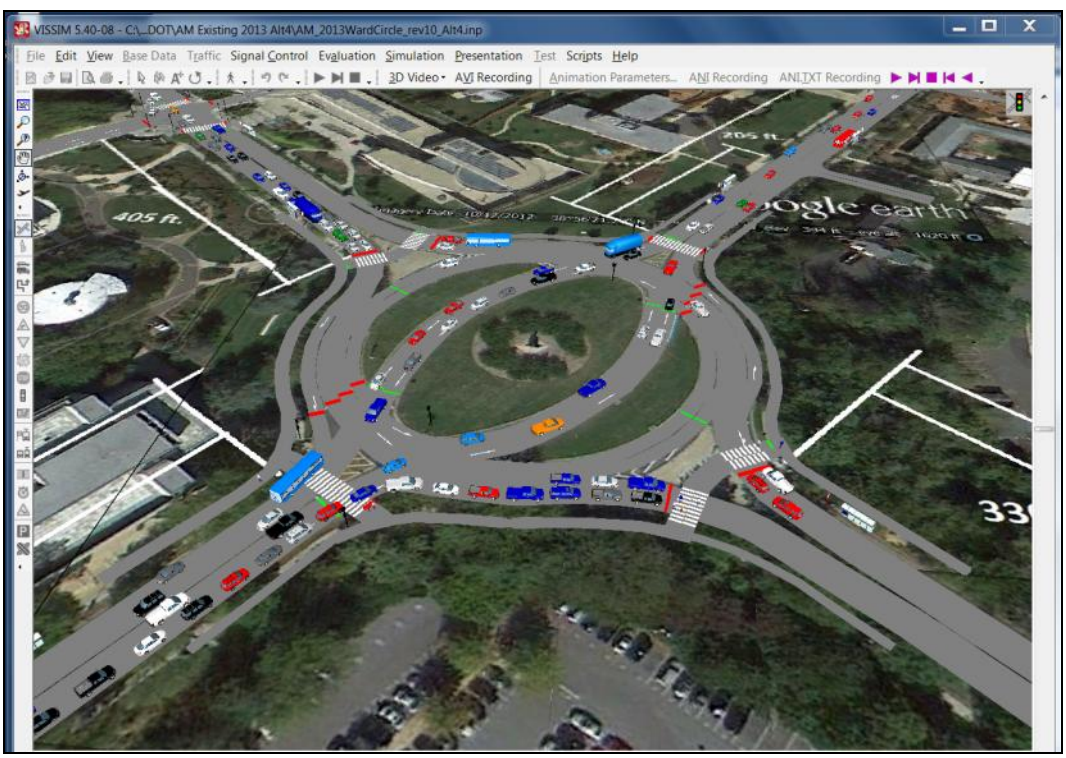

Table 4-5 | Results of Fully Signalized Traffic Circle Simulation Modeling Results

Intersection	Delay (s) Stop	Delay (s) Avg	Queue Length (ft) Avg	Queue Length (ft) Max	LOS
AM Peak Hour					
Massachusetts (E-W) Ave & AU Driveway	32.2	50.0	84.6	513.8	D
Massachusetts (E-W) Ave & DHS Driveway	0.2	1.2	0.3	141.5	A
Nebraska (N-S) Ave & AU Parking Lot	36.5	61.9	121.3	357.5	E
Nebraska (N-S) Ave & New Mexico Ave	38.7	58.0	118.4	774.6	E
Massachusetts (E-W) Ave & Berkshire Apts	3.7	7.7	13.1	379.3	A
Massachusetts (E-W) Ave (East End of Ward Circle)	1.3	1.9	1.3	107.5	A
Massachusetts (E-W) Ave (West End of Ward Circle)	0.4	0.9	0.3	50.6	A
Nebraska (N-S) Ave (South End of Ward Circle)	22.7	30.3	84.5	455.9	C
Nebraska (N-S) Ave (North End of Ward Circle)	11.0	14.5	28.7	262.3	B
Nebraska (N-S) Ave and DHS (North Driveway) /Church Driveway	0.9	3.6	1.8	195.9	A
Nebraska (N-S) Ave & DHS (South Driveway)	1.0	3.3	1.1	96.6	A
PM Peak Hour					
Massachusetts (E-W) Ave & AU Driveway	13.1	20.1	39.0	390.9	C
Massachusetts (E-W) Ave & DHS Driveway	1.4	4.1	2.2	191.1	A
Nebraska (N-S) Ave & AU Parking Lot	1.0	4.1	1.8	272.5	A
Nebraska (N-S) Ave & New Mexico Ave	13.5	20.7	39.6	517.2	C
Massachusetts (E-W) Ave & Berkshire Apts	2.3	5.2	7.0	261.5	A
Massachusetts (E-W) Ave (East End of Ward Circle)	0.0	0.0	0.1	15.0	A
Massachusetts (E-W) Ave (West End of Ward Circle)	0.7	1.3	0.6	70.2	A
Nebraska (N-S) Ave (South End of Ward Circle)	13.7	18.6	49.0	447.2	B
Nebraska (N-S) Ave (North End of Ward Circle)	13.1	17.0	41.2	269.9	B
Nebraska (N-S) Ave and DHS (North Driveway) /Church Driveway	1.2	5.8	3.2	277.4	A
Nebraska (N-S) Ave & DHS (South Driveway)	1.9	4.7	1.9	208.0	A

From the simulation model results, congestion during the morning peak hour occurred on Nebraska Avenue NW in the peak direction, traveling northbound, and on Massachusetts Avenue NW traveling eastbound. On Nebraska Avenue NW approach south of the Circle, average queues were approximately 330 feet and maximum queues were 460 feet. On eastbound Massachusetts Avenue NW, maximum queues were approximately 50 feet. In the Nebraska Avenue through lanes in the middle of the circle, queue lengths did extend back into the intersections of the Circle, mostly due to vehicles turning from the Massachusetts Avenue lanes. The queues did clear quickly once green time was made available to the through lanes.

Outside of the Circle, queuing occurred on eastbound Massachusetts Avenue at the Katzen Arts Center with maximum queue lengths of over 500 feet, thus extending back into Ward Circle. Queuing also occurred on northbound Nebraska Avenue NW at New Mexico Avenue NW with average queue lengths of 330 feet and maximum queue lengths of 440 feet.

Ward Circle NW

During the evening peak hour, congestion and queuing occurred on all northbound and westbound approaches to the Circle. Average queue lengths on northbound Nebraska Avenue NW were 130 feet, and maximum queue lengths were 450 feet. Maximum queue lengths on westbound Massachusetts Avenue NW were 60 feet.

Outside of the Circle, queuing occurred on the roadways approaching the Circle as well as driveway exits onto Nebraska and Massachusetts Avenues. Queuing occurred on westbound Massachusetts Avenue at the Katzen Arts Center (max queue 390 feet), the NAC driveway (190 feet) and the Berkshire Apartments (max queue 210 feet). Queues extended back beyond the preceding intersection on southbound Nebraska Avenue NW at the NAC driveway entrance (max queue ranging from 180 feet to 210 feet).

4.6. Comparison of Alternatives

A comparison of the analysis results are shown in Tables 4-2. The capacity analysis results show that the intersections at Ward Circle Study area operate at acceptable levels of service. Alternatives 1, 3, and 4 operate at a higher level of service than the existing operations. However, Alternatives 1, 2, and 3 process less vehicles than the existing operations.

Table 4-2 | Comparison of Analysis Results for Ward Circle

	AM Peak Hour			PM Peak Hour		
Alternative	**Simulated Volumes**	**Average Delay (s)**	**LOS**	**Simulated Volumes**	**Average Delay (s)**	**LOS**
Existing	10,852	26.79	C	10,413	22.35	C
Alternative #1	7,546	15.72	B	7,340	17.14	B
Alternative #2	7,080	30.76	C	7,620	30.30	C
Alternative #3	3,528	12.70	B	3,722	12.50	B
Alternative #4	10,488	14.82	B	10,875	11.02	B

When assessing the approaches to the Ward Circle, Table 4-3 compares the queues on each of the approaches. Queue lengths on the approaches to the Circle were improved from the existing conditions in all alternatives in the morning peak hour, but vary in the evening peak hour. Alternative 3 operated with longer queue lengths on Massachusetts Avenue than in the existing conditions. Alternatives 1, 2, and 4 operated with longer queue lengths on Nebraska Avenue than in the existing conditions.

On Massachusetts Avenue NW, Alternatives 1 and 2 exhibited longer queue lengths approaching the Circle than in the existing conditions, whereas Alternatives 3 and 4 exhibited shorter queue lengths than in the existing conditions. On Nebraska Avenue NW, all alternatives recorded longer queue lengths than in the existing conditions south of the Circle. North of Circle, Alternatives 3 and 4 recorded shorter queue lengths than in the existing conditions.

Table 4-3 | Queue Length Summary

	Maximum Queue Lengths									
	AM Peak Hour					PM Peak Hour				
Roadway	**Existing**	**Alt 1**	**Alt 2**	**Alt 3**	**Alt 4**	**Existing**	**Alt 1**	**Alt 2**	**Alt 3**	**Alt 4**
Ward Circle										
Massachusetts Avenue (EB)	62.8	25.8	29.4	181.3	50.6	58.9	23.6	25.5	187.6	23.7
Massachusetts Avenue (WB)	33.2	0.0	29.3	111.0	41.1	61.3	0.0	52.3	142.9	57.4
Nebraska Avenue (NB)	467.2	456.6	467.3	214.2	455.9	439.2	455.1	467.2	197.2	447.2
Nebraska Avenue (SB)	278.3	276.1	275.5	197.4	262.3	274.1	275.9	335.4	192.3	269.9
Massachusetts Avenue (East of Circle)										
DHS Driveway (WB)	80.7	683.7	360.0	0.0	23.6	659.5	683.5	656.9	29.6	191.1
Berkshire Apts. (WB)	182.8	393.2	185.9	181.3	185.7	385.8	394.8	386.9	183.8	211.3
Massachusetts Avenue (West of Circle)										
Katzen Driveway (EB)	346.3	518.0	523.1	295.0	513.8	386.6	484.1	266.8	230.0	265.2
Nebraska Avenue (North of Circle)										
DHS Driveway South (SB)	315.8	317.6	321.4	44.4	96.6	249.1	322.6	315.8	25.6	208.0
DHS Driveway North (SB)	358.1	428.3	456.3	258.4	195.9	174.3	431.6	431.8	129.9	177.4
Nebraska Avenue (South of Circle)										
AU Parking Lot (NB)	337.7	357.3	385.2	390.1	357.5	105.4	392.7	321.0	335.1	272.5
New Mexico Ave (NB)	403.3	445.8	438.2	430.7	437.9	309.2	405.1	321.8	403.2	332.2

5.0 Findings and Recommendations

5.1. Findings

The following findings are discussed for the traffic safety and operational analysis of Ward Circle NW in Washington, DC:

- The existing traffic conditions of Ward Circle shows traffic congestion during morning and evening peak hours. Vehicular traffic volumes exceed the roadway capacity during the peak hours. A large number of commuting vehicles traverse the Circle during the peak periods, contributing to the congestion.
- Large pedestrian volume at the Circle, which is mostly composed of American University students and staff. Field observations revealed that the heavy pedestrian volume crossing at the approaches of the Circle, particularly on unsignalized Massachusetts Avenue approaches, contributes to vehicle delays. Mid-block pedestrian crossings will disrupt traffic operations at an already congested location. It is these vehicle-pedestrian conflicts that are the root cause of vehicular delays on Massachusetts Avenue.
- Left turning vehicles from Nebraska Avenue and Massachusetts Avenue to the Department of Homeland Security's Nebraska Avenue Complex along corridor contribute to delays on these roadways, which impacts the traffic operations of Ward Circle.
- Traffic movements within the circle are intended to be restricted such that left turns from the Circle onto the Nebraska Avenue NW through lanes are prohibited, though drivers are frequently observed making such turns.
- Bus stops for WMATA buses and American University shuttles are located within one hundred feet of Ward Circle approaches and exits. Stopping buses contributes to vehicular delays and queuing on approaches to and exits from the Circle, which does impact the traffic operation of the Circle.

- The congestion at Ward Circle creates impacts on neighborhood streets with many local roadways experiencing increase in cut-through traffic.

Based on these findings, any improvements in vehicle-pedestrian conflicts on Massachusetts Avenue and throughput capacity on Nebraska Avenue will help relieve safety and operational concerns at the Circle.

5.2. Recommendations

The following recommendations are provided to minimize the safety and operational concerns at Ward Circle.

5.2.1. Reducing Vehicle-Pedestrian Conflicts on Massachusetts Avenue

- *Signalize the Massachusetts Avenue approaches to Ward Circle*: This action would formalize the pedestrian crossing at the approaches, which would minimize the disruption to traffic operations, thus creating safe crossing opportunities for pedestrians and minimize vehicle-pedestrian conflicts.

- *New Signage*: Add new signage for pedestrian crossing operation at Massachusetts Avenue crosswalks.

5.2.2. Improving Throughput Capacity on Nebraska Avenue

- *Revise Signage and Pavement Markings*: Revise signage so as to reduce signage over-population and to minimize driver confusion. Revise pavement markings to show desire lines for turning vehicles.

- *Prevent Illegal Left Turns*: Add new signage discouraging illegal left turns. Request MPD enforcement for a limited period to discourage illegal left turns.

5.2.3. Other

- *Relocate Bus Stops*: Relocate bus stops on approaches to Ward Circle further away from the Circle.

- *Periodic Neighborhood Updates*: Meet yearly with neighborhood associations to assess cut-through traffic volumes.

5.3. Infrastructure Recommendations

The initial recommendation for Ward Circle is to convert the Circle to a signalized traffic circle; i.e., to signalize all approaches to Circle as analyzed in Alternative #4. This action would formalize the pedestrian crossing at the approaches, which would minimize the disruption to traffic operations, thus creating safe crossing opportunities for pedestrians and minimize vehicle-pedestrian conflicts. This alternative would provide green through times for Massachusetts Avenue NW traffic, which would improve operations of the approaches. The costs for this conversion would be minimal in comparison to the other alternatives.

Appendix A – Traffic Data Collection Results

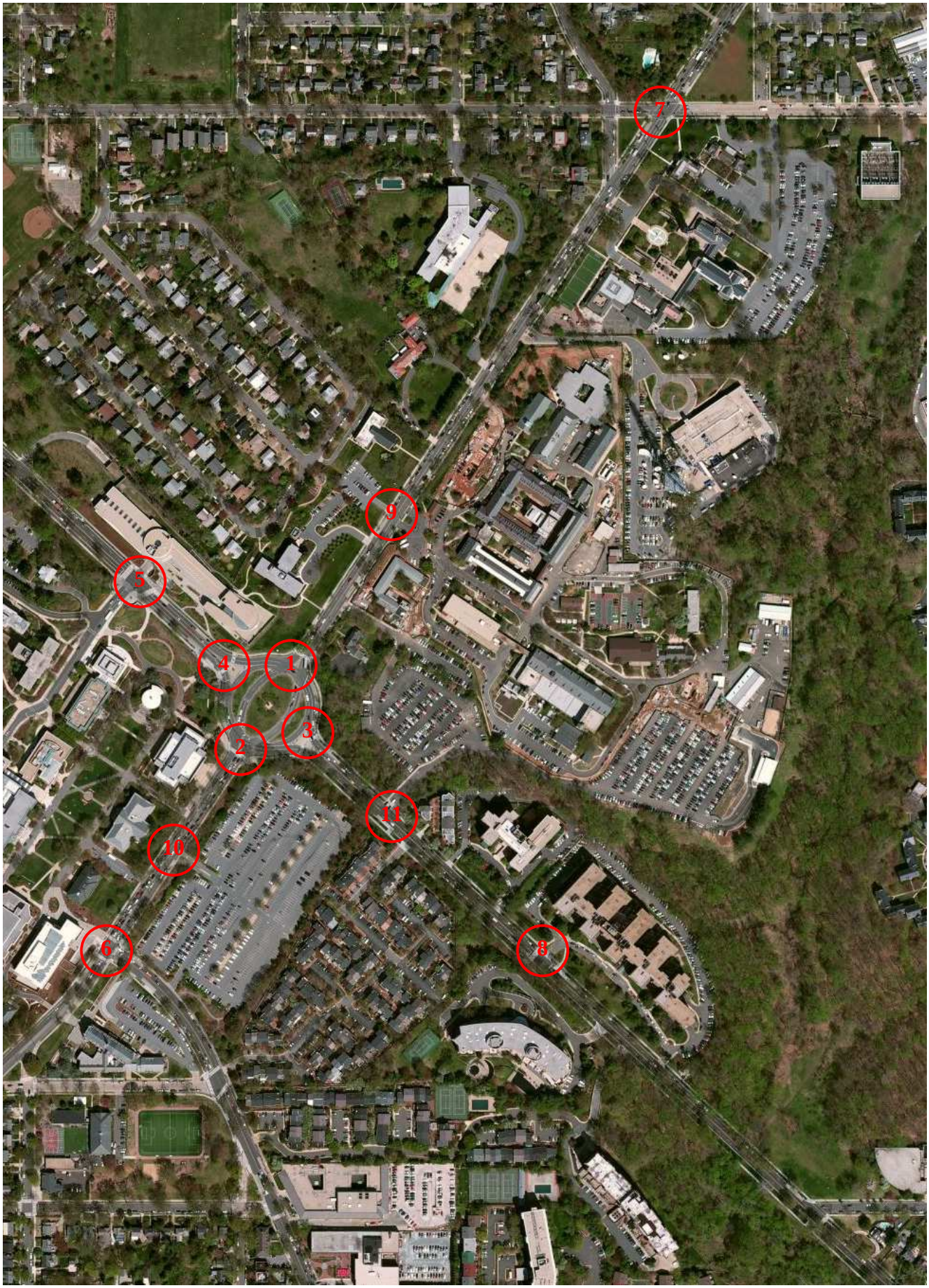
7
9
5
4
1
3
2
11
10
6
8

Turning Movement Counts Data Sheet (Total)

Precision Systems, Inc.

Date: 2/27/2013 Location: Nebraska Ave Ward Cir (North)
Duration: 7AM~2PM; 4PM~7PM Recorder: Jianwei/Wengang

Turning Movement Data - 15 Minutes Interval

Street	North Leg Nebraska Ave				East Leg Circle				South Leg Nebraska Ave				West Leg Circle			
Start	Right	Thru	Left	Ped	Right	Thru	Left	Ped	Right	Thru	Left	Ped	Right	Thru	Left	Ped
7:00 AM	17	127	0	8	20	75	20	0	0	141	0	0	0	0	0	0
7:15 AM	20	155	0	16	23	106	23	0	0	214	0	0	0	0	0	0
7:30 AM	19	228	0	14	21	109	39	0	0	213	0	0	0	0	0	0
7:45 AM	**22**	**243**	**0**	4	**34**	**151**	**42**	0	**0**	**232**	**0**	0	**0**	**0**	**0**	0
8:00 AM	**31**	**198**	**0**	7	**44**	**180**	**49**	0	**0**	**246**	**3**	0	**0**	**0**	**0**	0
8:15 AM	**32**	**217**	**0**	13	**46**	**140**	**43**	0	**0**	**248**	**1**	0	**0**	**0**	**0**	0
8:30 AM	**30**	**204**	**0**	19	**33**	**171**	**50**	0	**0**	**272**	**3**	0	**0**	**0**	**0**	0
8:45 AM	39	193	0	19	30	149	44	0	0	241	0	0	0	0	0	0
9:00 AM	37	191	0	10	18	144	37	0	0	272	0	0	0	0	0	0
9:15 AM	25	172	0	12	29	107	37	0	0	243	1	0	0	0	0	0
9:30 AM	34	108	0	17	36	134	13	0	0	223	1	0	0	0	0	0
9:45 AM	31	122	0	5	28	119	25	0	0	182	0	0	0	0	0	0
10:00 AM	39	121	0	13	15	96	30	0	0	146	1	0	0	0	0	0
10:15 AM	29	113	0	12	30	100	24	0	0	145	4	0	0	0	0	0
10:30 AM	21	111	0	6	18	118	23	0	0	144	3	0	0	0	0	0
10:45 AM	29	133	0	9	16	99	22	0	0	145	4	0	0	0	0	0
11:00 AM	29	133	0	9	19	95	17	0	0	129	6	0	0	0	0	0
11:15 AM	37	127	0	13	25	127	33	0	0	133	3	0	0	0	0	0
11:30 AM	39	131	0	32	20	152	34	0	0	144	0	0	0	0	0	0
11:45 AM	38	147	0	21	21	128	23	0	0	165	4	0	0	0	0	0
12:00 PM	30	129	0	9	28	141	25	0	0	146	6	0	0	0	0	0
12:15 PM	29	130	0	15	42	141	35	0	0	173	2	0	0	0	0	0
12:30 PM	21	136	0	11	34	165	34	0	0	138	2	0	0	0	0	0
12:45 PM	36	123	0	19	26	136	25	0	0	136	6	0	0	0	0	0
1:00 PM	32	136	0	17	25	110	18	0	0	141	5	0	0	0	0	0
1:15 PM	24	117	0	18	31	128	34	0	0	137	2	0	0	0	0	0
1:30 PM	25	116	0	18	31	128	29	0	0	143	3	0	0	0	0	0
1:45 PM	38	138	0	12	23	149	28	0	0	154	2	0	0	0	0	0
4:00 PM	25	208	0	17	38	188	65	0	0	217	1	0	0	0	0	0
4:15 PM	27	167	0	15	27	228	72	0	0	221	3	0	0	0	0	0
4:30 PM	15	206	0	17	24	237	52	0	0	199	1	0	0	0	0	0
4:45 PM	30	232	0	24	19	228	69	0	0	200	1	0	0	0	0	0
5:00 PM	**34**	**244**	**0**	22	**29**	**223**	**70**	0	**0**	**234**	**2**	0	**0**	**0**	**0**	0
5:15 PM	**43**	**227**	**0**	31	**27**	**259**	**46**	0	**0**	**234**	**1**	0	**0**	**0**	**0**	0
5:30 PM	**35**	**214**	**0**	23	**31**	**268**	**50**	0	**0**	**233**	**2**	0	**0**	**0**	**0**	0
5:45 PM	**45**	**219**	**0**	19	**22**	**287**	**51**	0	**0**	**229**	**2**	0	**0**	**0**	**0**	0
6:00 PM	30	207	0	12	26	285	39	0	0	210	2	0	0	0	0	0
6:15 PM	39	231	0	0	22	268	46	0	0	182	4	0	0	0	0	0
6:30 PM	29	183	0	0	20	246	31	0	0	185	2	0	0	0	0	0
6:45 PM	35	173	0	0	22	253	24	0	0	186	2	0	0	0	0	0
AM Peak	115	862	0	43	157	642	184	0	0	998	7	0	0	0	0	0
PM Peak	157	904	0	95	109	1037	217	0	0	930	7	0	0	0	0	0

Turning Movement Counts Data Sheet (Total)

Precision Systems, Inc.

Date: 2/27/2013 Location: Nebraska Ave Ward Cir (North)
Duration: 7AM~2PM; 4PM~7PM Recorder: Jianwei/Wengang

Turning Movement AM Peak Hour (7:45 AM ~ 8:45 AM)

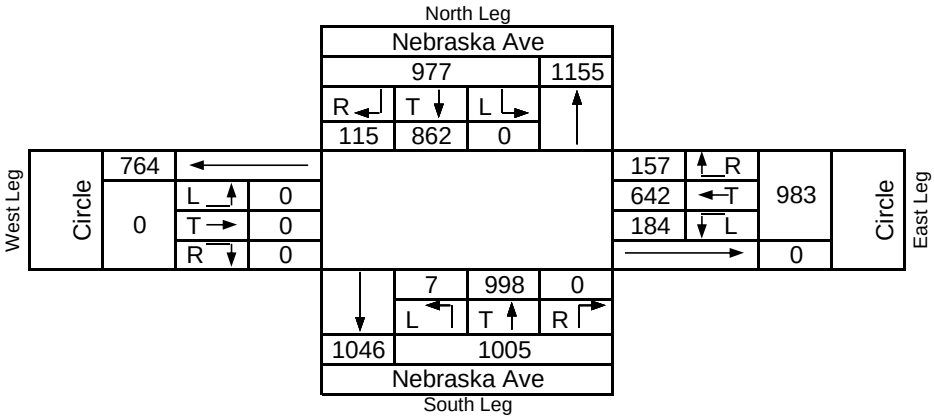

Turning Movement PM Peak Hour (5:00 PM ~ 6:00 PM)

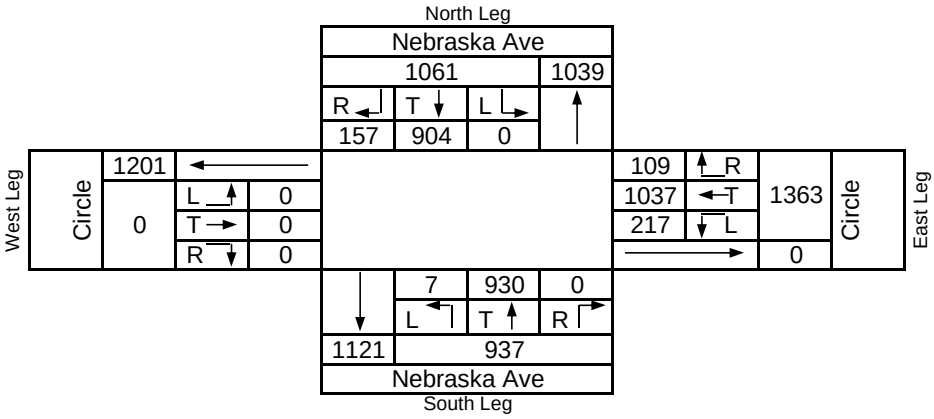

Turning Movement Counts Data Sheet (Car)

Precision Systems, Inc.

Date: 2/27/2013 Location: Nebraska Ave Ward Cir (North)
Duration: 7AM~2PM; 4PM~7PM Recorder: Jianwei/Wengang

Turning Movement Data - 15 Minutes Interval

Street	North Leg Nebraska Ave				East Leg Circle				South Leg Nebraska Ave				West Leg Circle			
Start	Right	Thru	Left		Right	Thru	Left		Right	Thru	Left		Right	Thru	Left	
7:00 AM	16	120	0	8	19	72	19	0	0	136	0	0	0	0	0	0
7:15 AM	17	149	0	16	21	103	22	0	0	203	0	0	0	0	0	0
7:30 AM	17	214	0	14	20	105	39	0	0	202	0	0	0	0	0	0
7:45 AM	20	235	0	4	33	148	38	0	0	221	0	0	0	0	0	0
8:00 AM	29	189	0	7	42	177	49	0	0	240	3	0	0	0	0	0
8:15 AM	28	204	0	13	44	138	40	0	0	239	1	0	0	0	0	0
8:30 AM	26	196	0	19	31	169	50	0	0	262	3	0	0	0	0	0
8:45 AM	33	186	0	19	29	143	44	0	0	229	0	0	0	0	0	0
9:00 AM	28	178	0	10	17	142	35	0	0	266	0	0	0	0	0	0
9:15 AM	20	161	0	12	28	106	35	0	0	231	1	0	0	0	0	0
9:30 AM	31	100	0	17	34	130	13	0	0	206	1	0	0	0	0	0
9:45 AM	27	112	0	5	26	114	24	0	0	174	0	0	0	0	0	0
10:00 AM	35	114	0	13	13	92	28	0	0	137	1	0	0	0	0	0
10:15 AM	27	106	0	12	25	99	21	0	0	134	3	0	0	0	0	0
10:30 AM	20	105	0	6	15	113	21	0	0	137	3	0	0	0	0	0
10:45 AM	26	118	0	9	15	90	20	0	0	133	4	0	0	0	0	0
11:00 AM	26	130	0	9	16	92	17	0	0	120	4	0	0	0	0	0
11:15 AM	36	126	0	13	22	120	33	0	0	124	3	0	0	0	0	0
11:30 AM	36	128	0	32	16	149	33	0	0	134	0	0	0	0	0	0
11:45 AM	35	144	0	21	19	125	23	0	0	154	4	0	0	0	0	0
12:00 PM	28	127	0	9	26	138	24	0	0	139	6	0	0	0	0	0
12:15 PM	27	128	0	15	41	138	34	0	0	162	2	0	0	0	0	0
12:30 PM	18	133	0	11	33	161	33	0	0	126	2	0	0	0	0	0
12:45 PM	33	120	0	19	24	132	25	0	0	132	6	0	0	0	0	0
1:00 PM	31	135	0	17	24	109	18	0	0	133	5	0	0	0	0	0
1:15 PM	22	115	0	18	30	125	32	0	0	127	2	0	0	0	0	0
1:30 PM	24	115	0	18	29	128	28	0	0	135	3	0	0	0	0	0
1:45 PM	35	135	0	12	22	144	27	0	0	150	2	0	0	0	0	0
4:00 PM	24	201	0	17	37	186	64	0	0	206	1	0	0	0	0	0
4:15 PM	25	162	0	15	26	223	72	0	0	215	3	0	0	0	0	0
4:30 PM	15	200	0	17	23	235	52	0	0	186	1	0	0	0	0	0
4:45 PM	28	226	0	24	18	225	66	0	0	194	1	0	0	0	0	0
5:00 PM	32	240	0	22	27	219	69	0	0	227	2	0	0	0	0	0
5:15 PM	41	223	0	31	26	258	46	0	0	227	1	0	0	0	0	0
5:30 PM	34	210	0	23	30	265	50	0	0	220	2	0	0	0	0	0
5:45 PM	43	216	0	19	20	283	51	0	0	225	2	0	0	0	0	0
6:00 PM	29	202	0	12	25	281	38	0	0	202	2	0	0	0	0	0
6:15 PM	38	227	0	0	22	267	45	0	0	175	4	0	0	0	0	0
6:30 PM	27	179	0	0	19	245	31	0	0	178	2	0	0	0	0	0
6:45 PM	33	169	0	0	21	251	24	0	0	182	2	0	0	0	0	0
6:45 PM	0	0	0	0	0	0	0	0	0	0	0	0	0	0	0	0

Turning Movement Counts Data Sheet (Truck)

Precision Systems, Inc.

Date: 2/27/2013 Location: Nebraska Ave Ward Cir (North)
Duration: 7AM~2PM; 4PM~7PM Recorder: Jianwei/Wengang

Turning Movement Data - 15 Minutes Interval

Street	North Leg Nebraska Ave				East Leg Circle				South Leg Nebraska Ave				West Leg Circle			
Start	Right	Thru	Left		Right	Thru	Left		Right	Thru	Left		Right	Thru	Left	
7:00 AM	1	7	0		1	3	1		0	5	0		0	0	0	
7:15 AM	3	6	0		2	3	1		0	11	0		0	0	0	
7:30 AM	2	14	0		1	4	0		0	11	0		0	0	0	
7:45 AM	2	8	0		1	3	4		0	11	0		0	0	0	
8:00 AM	2	9	0		2	3	0		0	6	0		0	0	0	
8:15 AM	4	13	0		2	2	3		0	9	0		0	0	0	
8:30 AM	4	8	0		2	2	0		0	10	0		0	0	0	
8:45 AM	6	7	0		1	6	0		0	12	0		0	0	0	
9:00 AM	9	13	0		1	2	2		0	6	0		0	0	0	
9:15 AM	5	11	0		1	1	2		0	12	0		0	0	0	
9:30 AM	3	8	0		2	4	0		0	17	0		0	0	0	
9:45 AM	4	10	0		2	5	1		0	8	0		0	0	0	
10:00 AM	4	7	0		2	4	2		0	9	0		0	0	0	
10:15 AM	2	7	0		5	1	3		0	11	1		0	0	0	
10:30 AM	1	6	0		3	5	2		0	7	0		0	0	0	
10:45 AM	3	15	0		1	9	2		0	12	0		0	0	0	
11:00 AM	3	3	0		3	3	0		0	9	2		0	0	0	
11:15 AM	1	1	0		3	7	0		0	9	0		0	0	0	
11:30 AM	3	3	0		4	3	1		0	10	0		0	0	0	
11:45 AM	3	3	0		2	3	0		0	11	0		0	0	0	
12:00 PM	2	2	0		2	3	1		0	7	0		0	0	0	
12:15 PM	2	2	0		1	3	1		0	11	0		0	0	0	
12:30 PM	3	3	0		1	4	1		0	12	0		0	0	0	
12:45 PM	3	3	0		2	4	0		0	4	0		0	0	0	
1:00 PM	1	1	0		1	1	0		0	8	0		0	0	0	
1:15 PM	2	2	0		1	3	2		0	10	0		0	0	0	
1:30 PM	1	1	0		2	0	1		0	8	0		0	0	0	
1:45 PM	3	3	0		1	5	1		0	4	0		0	0	0	
4:00 PM	1	7	0		1	2	1		0	11	0		0	0	0	
4:15 PM	2	5	0		1	5	0		0	6	0		0	0	0	
4:30 PM	0	6	0		1	2	0		0	13	0		0	0	0	
4:45 PM	2	6	0		1	3	3		0	6	0		0	0	0	
5:00 PM	2	4	0		2	4	1		0	7	0		0	0	0	
5:15 PM	2	4	0		1	1	0		0	7	0		0	0	0	
5:30 PM	1	4	0		1	3	0		0	13	0		0	0	0	
5:45 PM	2	3	0		2	4	0		0	4	0		0	0	0	
6:00 PM	1	5	0		1	4	1		0	8	0		0	0	0	
6:15 PM	1	4	0		0	1	1		0	7	0		0	0	0	
6:30 PM	2	4	0		1	1	0		0	7	0		0	0	0	
6:45 PM	2	4	0		1	2	0		0	4	0		0	0	0	

Turning Movement Counts Data Sheet (Bike)

Precision Systems, Inc.

Date: 2/27/2013 Location: Nebraska Ave Ward Cir (North)
Duration: 7AM~2PM; 4PM~7PM Recorder: Jianwei/Wengang

Turning Movement Data - 15 Minutes Interval

Street	North Leg Nebraska Ave				East Leg Circle				South Leg Nebraska Ave				West Leg Circle			
Start	Right	Thru	Left		Right	Thru	Left		Right	Thru	Left		Right	Thru	Left	
7:00 AM	1	0	0		0	0	0		0	0	0		0	0	0	
7:15 AM	0	0	0		0	0	0		0	0	0		0	0	0	
7:30 AM	0	0	0		0	1	0		0	0	0		0	0	0	
7:45 AM	0	0	0		0	0	0		0	0	0		0	0	0	
8:00 AM	0	0	1		0	0	0		0	1	0		0	0	0	
8:15 AM	0	0	0		0	1	0		0	1	0		0	0	0	
8:30 AM	0	0	0		0	1	0		0	0	1		0	0	0	
8:45 AM	0	0	0		0	0	0		0	0	0		0	0	0	
9:00 AM	0	0	0		0	1	0		0	1	0		0	0	0	
9:15 AM	1	0	0		0	0	0		0	0	0		0	0	0	
9:30 AM	0	0	0		0	0	0		0	0	0		0	0	0	
9:45 AM	0	0	0		0	1	0		0	0	0		0	0	0	
10:00 AM	1	2	0		0	1	0		0	0	0		0	0	0	
10:15 AM	0	1	0		0	0	0		0	0	0		0	0	0	
10:30 AM	2	0	0		0	0	0		0	0	1		0	0	0	
10:45 AM	0	1	0		0	1	0		0	0	0		0	0	0	
11:00 AM	0	0	0		2	0	0		0	0	0		0	0	0	
11:15 AM	1	1	0		2	0	0		0	0	0		0	0	0	
11:30 AM	0	0	0		0	2	0		0	0	0		0	0	0	
11:45 AM	0	0	0		0	0	0		0	0	0		0	0	0	
12:00 PM	0	0	0		0	0	0		0	0	0		0	0	0	
12:15 PM	1	1	0		0	0	0		0	0	0		0	0	0	
12:30 PM	0	0	0		1	0	0		0	0	0		0	0	0	
12:45 PM	0	0	0		0	0	0		0	0	0		0	0	0	
1:00 PM	0	0	0		0	1	0		0	0	0		0	0	0	
1:15 PM	0	0	0		0	1	0		0	0	0		0	0	0	
1:30 PM	0	0	0		0	0	0		0	0	0		0	0	0	
1:45 PM	0	0	0		1	0	0		0	1	0		0	0	0	
4:00 PM	0	0	0		0	0	0		0	0	0		0	0	0	
4:15 PM	0	0	0		0	2	0		0	0	0		0	0	0	
4:30 PM	0	0	0		0	0	0		0	0	0		0	0	0	
4:45 PM	0	1	0		0	0	0		0	0	0		0	0	0	
5:00 PM	0	1	0		0	0	0		0	0	0		0	1	0	
5:15 PM	0	0	0		0	0	0		0	1	0		0	0	0	
5:30 PM	1	1	0		0	0	0		0	0	0		0	0	0	
5:45 PM	0	0	0		0	1	0		0	2	0		0	0	0	
6:00 PM	1	0	0		0	0	0		0	0	0		0	0	0	
6:15 PM	0	0	0		0	0	0		0	0	0		0	0	0	
6:30 PM	0	0	0		0	0	0		0	0	0		0	0	0	
6:45 PM	0	0	0		0	0	0		0	0	0		0	0	0	
6:45 PM	0	0	0		0	0	0		0	0	0		0	0	0	

Turning Movement Counts Data Sheet (Pedestrian)

Precision Systems, Inc.

Date: 2/27/2013 Location: Nebraska Ave Ward Cir (North)
Duration: 7AM~2PM; 4PM~7PM Recorder: Jianwei/Wengang

Turning Movement Data - 15 Minutes Interval

Street	North Crosswalk Nebraska Ave	East Crosswalk Circle	South Crosswalk Nebraska Ave	West Crosswalk Circle
7:00 AM	8	0	0	0
7:15 AM	16	0	0	0
7:30 AM	14	0	0	0
7:45 AM	4	0	0	0
8:00 AM	7	0	0	0
8:15 AM	13	0	0	0
8:30 AM	19	0	0	0
8:45 AM	19	0	0	0
9:00 AM	10	0	0	0
9:15 AM	12	0	0	0
9:30 AM	17	0	0	0
9:45 AM	5	0	0	0
10:00 AM	13	0	0	0
10:15 AM	12	0	0	0
10:30 AM	6	0	0	0
10:45 AM	9	0	0	0
11:00 AM	9	0	0	0
11:15 AM	13	0	0	0
11:30 AM	32	0	0	0
11:45 AM	21	0	0	0
12:00 PM	9	0	0	0
12:15 PM	15	0	0	0
12:30 PM	11	0	0	0
12:45 PM	19	0	0	0
1:00 PM	17	0	0	0
1:15 PM	18	0	0	0
1:30 PM	18	0	0	0
12:00 AM	0	0	0	0
4:00 PM	17	0	0	0
4:15 PM	15	0	0	0
4:30 PM	17	0	0	0
4:45 PM	24	0	0	0
5:00 PM	22	0	0	0
5:15 PM	31	0	0	0
5:30 PM	23	0	0	0
5:45 PM	19	0	0	0
6:00 PM	12	0	0	0
6:15 PM	0	0	0	0
6:30 PM	0	0	0	0
6:45 PM	0	0	0	0

Turning Movement Counts Data Sheet (Total)

Precision Systems, Inc.

Date: 2/27/2013 Location: Nebraska Ave Ward Cir (South)
Duration: 7AM~2PM; 4PM~7PM Recorder: Jianwei/Wengang

Turning Movement Data - 15 Minutes Interval

Street	North Leg Nebraska Ave				East Leg Circle				South Leg Nebraska Ave				West Leg Circle			
Start	Right	Thru	Left	Ped	Right	Thru	Left	Ped	Right	Thru	Left	Ped	Right	Thru	Left	Ped
7:00 AM	0	147	2	0	0	0	0	0	68	138	0	0	37	186	4	0
7:15 AM	0	181	0	0	0	0	0	0	59	204	0	0	34	304	11	0
7:30 AM	**0**	**268**	**0**	**0**	**0**	**0**	**0**	**0**	**99**	**195**	**0**	**0**	**38**	**339**	**7**	**0**
7:45 AM	**0**	**291**	**5**	**0**	**0**	**0**	**0**	**0**	**100**	**230**	**0**	**9**	**53**	**313**	**12**	**0**
8:00 AM	**0**	**245**	**1**	**0**	**0**	**0**	**0**	**0**	**64**	**221**	**0**	**12**	**62**	**263**	**19**	**0**
8:15 AM	**0**	**256**	**0**	**0**	**0**	**0**	**0**	**0**	**79**	**241**	**0**	**26**	**63**	**242**	**20**	**0**
8:30 AM	0	256	0	0	0	0	0	2	79	254	0	45	68	233	16	0
8:45 AM	0	237	3	0	0	0	0	0	80	230	0	143	64	237	23	0
9:00 AM	0	229	2	0	0	0	0	0	71	254	0	31	54	241	20	0
9:15 AM	0	212	0	0	0	0	0	0	64	233	0	16	56	250	20	0
9:30 AM	0	118	2	0	0	0	0	0	79	205	0	33	53	193	8	0
9:45 AM	0	141	0	0	0	0	0	0	62	168	0	46	52	166	13	0
10:00 AM	0	149	2	0	0	0	0	0	55	131	0	79	52	127	13	0
10:15 AM	0	134	4	0	0	0	0	0	53	136	0	70	58	146	8	0
10:30 AM	0	127	6	0	0	0	0	0	54	138	0	35	37	114	16	0
10:45 AM	0	162	2	0	0	0	0	0	72	144	0	64	49	116	10	0
11:00 AM	0	139	1	0	0	0	0	0	52	115	0	56	37	114	12	0
11:15 AM	0	161	0	0	0	0	0	0	75	120	0	75	54	122	12	0
11:30 AM	0	150	0	0	0	0	0	0	91	136	0	169	46	120	10	0
11:45 AM	0	179	0	0	0	0	0	0	67	150	0	67	56	125	22	0
12:00 PM	0	136	3	0	0	0	0	0	62	140	0	50	47	126	14	0
12:15 PM	0	163	2	0	0	0	0	0	73	162	0	39	48	121	12	0
12:30 PM	0	173	1	0	0	0	0	0	63	131	0	42	38	106	10	0
12:45 PM	0	150	1	0	0	0	0	0	65	135	0	71	46	108	15	0
1:00 PM	0	147	3	0	0	0	0	0	56	127	0	68	41	100	13	0
1:15 PM	0	147	0	0	0	0	0	0	76	118	0	57	44	122	21	0
1:30 PM	0	145	5	0	0	0	0	0	57	131	0	62	50	147	14	0
1:45 PM	0	168	1	0	0	0	0	0	76	149	0	52	54	147	12	1
4:00 PM	0	270	0	0	0	0	0	0	65	195	0	61	52	102	19	0
4:15 PM	0	239	1	0	0	0	0	0	81	208	0	67	44	140	13	0
4:30 PM	0	255	0	0	0	0	0	0	71	192	0	69	57	118	22	0
4:45 PM	0	302	0	0	0	0	0	0	85	189	0	64	54	94	15	0
5:00 PM	**0**	**301**	**1**	**0**	**0**	**0**	**0**	**0**	**79**	**202**	**0**	**131**	**54**	**147**	**40**	**0**
5:15 PM	**0**	**286**	**0**	**0**	**0**	**0**	**0**	**0**	**92**	**205**	**0**	**184**	**63**	**141**	**22**	**0**
5:30 PM	**0**	**269**	**1**	**0**	**0**	**0**	**0**	**0**	**97**	**214**	**0**	**90**	**50**	**166**	**25**	**0**
5:45 PM	**0**	**263**	**0**	**0**	**0**	**0**	**0**	**0**	**78**	**211**	**0**	**68**	**69**	**176**	**15**	**0**
6:00 PM	0	246	2	0	0	0	0	0	97	189	0	51	66	177	23	0
6:15 PM	0	277	1	0	0	0	0	0	64	167	0	56	72	156	12	0
6:30 PM	0	210	1	0	0	0	0	0	79	167	0	61	50	135	17	0
6:45 PM	0	194	1	0	0	0	0	0	84	171	0	70	58	139	21	0
AM Peak	0	1060	6	0	0	0	0	0	342	887	0	47	216	1157	58	0
PM Peak	0	1119	2	0	0	0	0	0	346	832	0	473	236	630	102	0

Turning Movement Counts Data Sheet (Total)

Precision Systems, Inc.

Date: 2/27/2013 Location: Nebraska Ave Ward Cir (South)
Duration: 7AM~2PM; 4PM~7PM Recorder: Jianwei/Wengang

Turning Movement AM Peak Hour (7:30 AM ~ 8:30 AM)

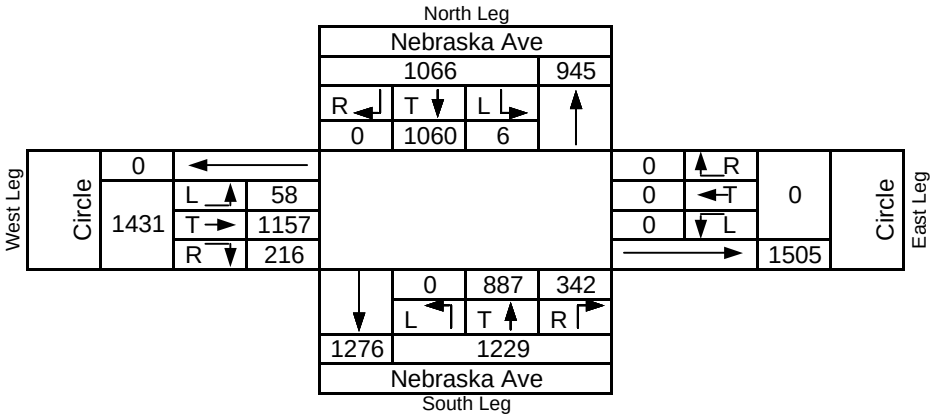

Turning Movement PM Peak Hour (5:00 PM ~ 6:00 PM)

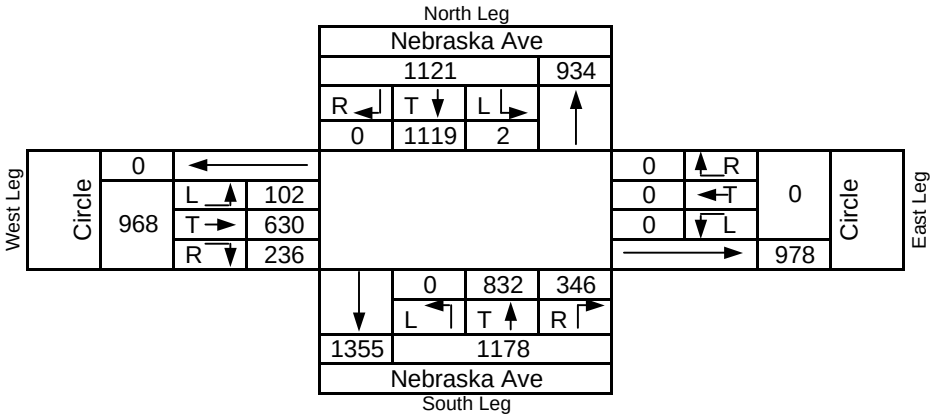

Turning Movement Counts Data Sheet (Car)

Precision Systems, Inc.

Date: 2/27/2013 Location: Nebraska Ave Ward Cir (South)
Duration: 7AM~2PM; 4PM~7PM Recorder: Jianwei/Wengang

Turning Movement Data - 15 Minutes Interval

Street	North Leg Nebraska Ave				East Leg Circle				South Leg Nebraska Ave				West Leg Circle			
Start	Right	Thru	Left		Right	Thru	Left		Right	Thru	Left		Right	Thru	Left	
7:00 AM	0	141	1	0	0	0	0	0	64	134	0	0	35	183	4	0
7:15 AM	0	174	0	0	0	0	0	0	56	197	0	0	34	299	7	0
7:30 AM	0	254	0	0	0	0	0	0	99	189	0	0	37	335	4	0
7:45 AM	0	278	5	0	0	0	0	0	99	223	0	9	50	307	9	0
8:00 AM	0	237	0	0	0	0	0	0	63	217	0	12	58	256	18	0
8:15 AM	0	242	0	0	0	0	0	0	79	235	0	26	63	237	19	0
8:30 AM	0	248	0	0	0	0	0	2	78	248	0	45	66	229	12	0
8:45 AM	0	229	3	0	0	0	0	0	76	224	0	143	63	230	16	0
9:00 AM	0	214	2	0	0	0	0	0	69	251	0	31	49	239	16	0
9:15 AM	0	198	0	0	0	0	0	0	60	228	0	16	51	244	15	0
9:30 AM	0	109	2	0	0	0	0	0	76	191	0	33	52	191	5	0
9:45 AM	0	129	0	0	0	0	0	0	60	164	0	46	50	161	9	0
10:00 AM	0	140	2	0	0	0	0	0	52	126	0	79	47	125	8	0
10:15 AM	0	123	4	0	0	0	0	0	49	127	0	70	56	143	5	0
10:30 AM	0	117	6	0	0	0	0	0	53	134	0	35	35	109	10	0
10:45 AM	0	143	2	0	0	0	0	0	68	137	0	64	46	114	8	0
11:00 AM	0	139	1	0	0	0	0	0	47	108	0	56	35	112	10	0
11:15 AM	0	161	0	0	0	0	0	0	70	117	0	75	51	114	7	0
11:30 AM	0	150	0	0	0	0	0	0	91	131	0	169	44	114	6	0
11:45 AM	0	179	0	0	0	0	0	0	64	142	0	67	56	122	18	0
12:00 PM	0	136	3	0	0	0	0	0	61	138	0	50	47	122	10	0
12:15 PM	0	163	2	0	0	0	0	0	71	154	0	39	46	118	8	0
12:30 PM	0	173	1	0	0	0	0	0	63	123	0	42	38	104	6	0
12:45 PM	0	150	1	0	0	0	0	0	64	135	0	71	46	105	12	0
1:00 PM	0	147	2	0	0	0	0	0	52	124	0	68	39	98	9	0
1:15 PM	0	147	0	0	0	0	0	0	75	111	0	57	43	115	18	0
1:30 PM	0	145	4	0	0	0	0	0	57	126	0	62	48	139	11	0
1:45 PM	0	168	1	0	0	0	0	0	76	147	0	52	52	140	8	1
4:00 PM	0	262	0	0	0	0	0	0	64	190	0	61	52	99	15	0
4:15 PM	0	234	1	0	0	0	0	0	77	204	0	67	43	135	10	0
4:30 PM	0	248	0	0	0	0	0	0	67	183	0	69	56	118	17	0
4:45 PM	0	293	0	0	0	0	0	0	82	184	0	64	54	90	12	0
5:00 PM	0	296	1	0	0	0	0	0	76	199	0	131	54	137	33	0
5:15 PM	0	282	0	0	0	0	0	0	90	200	0	184	63	138	19	0
5:30 PM	0	264	1	0	0	0	0	0	95	206	0	90	50	161	21	0
5:45 PM	0	260	0	0	0	0	0	0	78	208	0	68	69	169	12	0
6:00 PM	0	240	2	0	0	0	0	0	97	188	0	51	66	171	18	0
6:15 PM	0	272	1	0	0	0	0	0	64	164	0	56	72	150	9	0
6:30 PM	0	206	1	0	0	0	0	0	79	164	0	61	50	131	13	0
6:45 PM	0	190	1	0	0	0	0	0	81	168	0	70	56	132	18	0
6:45 PM	0	0	0	0	0	0	0	0	0	0	0	0	0	0	0	0

Turning Movement Counts Data Sheet (Truck)

Precision Systems, Inc.

Date: 2/27/2013 Location: Nebraska Ave Ward Cir (South)
Duration: 7AM~2PM; 4PM~7PM Recorder: Jianwei/Wengang

Turning Movement Data - 15 Minutes Interval

Street	North Leg Nebraska Ave				East Leg Circle				South Leg Nebraska Ave				West Leg Circle			
Start	Right	Thru	Left		Right	Thru	Left		Right	Thru	Left		Right	Thru	Left	
7:00 AM	0	6	1		0	0	0		4	4	0		2	3	0	
7:15 AM	0	7	0		0	0	0		3	7	0		0	5	4	
7:30 AM	0	14	0		0	0	0		0	6	0		1	4	3	
7:45 AM	0	13	0		0	0	0		1	7	0		3	6	3	
8:00 AM	0	8	1		0	0	0		1	4	0		4	7	1	
8:15 AM	0	14	0		0	0	0		0	6	0		0	5	1	
8:30 AM	0	8	0		0	0	0		1	6	0		2	4	4	
8:45 AM	0	8	0		0	0	0		4	6	0		1	7	7	
9:00 AM	0	15	0		0	0	0		2	3	0		5	2	4	
9:15 AM	0	14	0		0	0	0		4	5	0		5	6	5	
9:30 AM	0	9	0		0	0	0		3	14	0		1	2	3	
9:45 AM	0	12	0		0	0	0		2	4	0		2	5	4	
10:00 AM	0	9	0		0	0	0		3	5	0		5	2	5	
10:15 AM	0	11	0		0	0	0		4	9	0		2	3	3	
10:30 AM	0	10	0		0	0	0		1	4	0		2	5	6	
10:45 AM	0	19	0		0	0	0		4	7	0		3	2	2	
11:00 AM	0	0	0		0	0	0		5	7	0		2	2	2	
11:15 AM	0	0	0		0	0	0		5	3	0		3	8	5	
11:30 AM	0	0	0		0	0	0		0	5	0		2	6	4	
11:45 AM	0	0	0		0	0	0		3	8	0		0	3	4	
12:00 PM	0	0	0		0	0	0		1	2	0		0	4	4	
12:15 PM	0	0	0		0	0	0		2	8	0		2	3	4	
12:30 PM	0	0	0		0	0	0		0	8	0		0	2	4	
12:45 PM	0	0	0		0	0	0		1	0	0		0	3	3	
1:00 PM	0	0	1		0	0	0		4	3	0		2	2	4	
1:15 PM	0	0	0		0	0	0		1	7	0		1	7	3	
1:30 PM	0	0	1		0	0	0		0	5	0		2	8	3	
1:45 PM	0	0	0		0	0	0		0	2	0		2	7	4	
4:00 PM	0	8	0		0	0	0		1	5	0		0	3	4	
4:15 PM	0	5	0		0	0	0		4	4	0		1	5	3	
4:30 PM	0	7	0		0	0	0		4	9	0		1	0	5	
4:45 PM	0	9	0		0	0	0		3	5	0		0	4	3	
5:00 PM	0	5	0		0	0	0		3	3	0		0	10	7	
5:15 PM	0	4	0		0	0	0		2	5	0		0	3	3	
5:30 PM	0	5	0		0	0	0		2	8	0		0	5	4	
5:45 PM	0	3	0		0	0	0		0	3	0		0	7	3	
6:00 PM	0	6	0		0	0	0		0	1	0		0	6	5	
6:15 PM	0	5	0		0	0	0		0	3	0		0	6	3	
6:30 PM	0	4	0		0	0	0		0	3	0		0	4	4	
6:45 PM	0	4	0		0	0	0		3	3	0		2	7	3	

Turning Movement Counts Data Sheet (Bike)

Precision Systems, Inc.

Date: 2/27/2013 Location: Nebraska Ave Ward Cir (South)
Duration: 7AM~2PM; 4PM~7PM Recorder: Jianwei/Wengang

Turning Movement Data - 15 Minutes Interval

Street	North Leg Nebraska Ave				East Leg Circle				South Leg Nebraska Ave				West Leg Circle			
Start	Right	Thru	Left		Right	Thru	Left		Right	Thru	Left		Right	Thru	Left	
7:00 AM	0	0	0		0	0	0		0	0	0		0	0	0	
7:15 AM	0	0	0		0	0	0		0	0	0		0	0	0	
7:30 AM	0	0	0		0	0	0		0	0	0		0	6	0	
7:45 AM	0	0	0		0	0	0		0	0	0		0	0	0	
8:00 AM	0	0	0		0	0	0		0	0	0		0	0	0	
8:15 AM	0	0	0		0	0	0		0	1	0		0	0	0	
8:30 AM	0	0	0		0	0	0		0	0	0		0	0	0	
8:45 AM	0	0	0		0	0	0		0	0	0		2	1	0	
9:00 AM	0	0	0		0	0	0		1	1	0		0	0	0	
9:15 AM	0	0	0		0	0	0		1	0	0		0	0	0	
9:30 AM	0	0	0		0	0	0		0	0	0		0	0	0	
9:45 AM	0	0	0		0	0	0		0	0	0		0	0	0	
10:00 AM	0	2	0		0	0	0		0	0	0		0	0	0	
10:15 AM	0	1	0		0	0	0		0	0	0		0	0	0	
10:30 AM	0	0	0		0	0	0		0	0	0		0	1	0	
10:45 AM	0	1	0		0	0	0		0	0	0		0	0	0	
11:00 AM	0	0	0		0	0	0		1	1	0		0	1	0	
11:15 AM	0	0	0		0	0	0		0	0	0		0	1	0	
11:30 AM	0	0	0		0	0	0		0	0	0		2	0	0	
11:45 AM	0	0	0		0	0	0		0	0	0		0	0	0	
12:00 PM	0	0	0		0	0	0		0	0	0		0	0	0	
12:15 PM	0	0	0		0	0	0		0	0	0		0	0	0	
12:30 PM	0	0	0		0	0	0		0	0	0		0	0	0	
12:45 PM	0	0	0		0	0	0		0	0	0		0	0	0	
1:00 PM	0	0	0		0	0	0		1	0	0		0	0	0	
1:15 PM	0	0	0		0	0	0		1	0	0		0	0	0	
1:30 PM	0	0	0		0	0	0		0	0	0		0	1	0	
1:45 PM	0	0	0		0	0	0		4	1	0		0	1	0	
4:00 PM	0	0	0		0	1	0		0	0	0		0	1	0	
4:15 PM	0	0	0		0	0	0		0	0	0		0	0	0	
4:30 PM	0	0	0		0	0	0		0	0	1		0	0	0	
4:45 PM	0	1	0		0	1	1		0	0	0		0	0	0	
5:00 PM	0	1	0		0	3	2		0	0	1		1	0	0	
5:15 PM	0	1	0		0	2	2		0	0	0		0	0	0	
5:30 PM	0	1	0		0	0	1		0	2	0		0	0	0	
5:45 PM	0	0	0		0	0	0		0	0	0		0	0	0	
6:00 PM	0	0	0		0	0	0		0	0	0		0	0	0	
6:15 PM	0	0	0		0	0	0		0	0	0		0	1	0	
6:30 PM	0	0	0		0	0	0		0	0	0		0	1	0	
6:45 PM	0	0	0		0	0	0		0	0	0		0	0	0	
6:45 PM	0	0	0		0	0	0		0	0	0		0	0	0	

Turning Movement Counts Data Sheet (Pedestrian)

Precision Systems, Inc.

Date: 2/27/2013 Location: Nebraska Ave Ward Cir (South)
Duration: 7AM~2PM; 4PM~7PM Recorder: Jianwei/Wengang

Turning Movement Data - 15 Minutes Interval

Street	North Crosswalk Nebraska Ave	East Crosswalk Circle	South Crosswalk Nebraska Ave	West Crosswalk Circle
7:00 AM	0	0	0	0
7:15 AM	0	0	0	0
7:30 AM	0	0	0	0
7:45 AM	0	0	9	0
8:00 AM	0	0	12	0
8:15 AM	0	0	26	0
8:30 AM	0	2	45	0
8:45 AM	0	0	143	0
9:00 AM	0	0	31	0
9:15 AM	0	0	16	0
9:30 AM	0	0	33	0
9:45 AM	0	0	46	0
10:00 AM	0	0	79	0
10:15 AM	0	0	70	0
10:30 AM	0	0	35	0
10:45 AM	0	0	64	0
11:00 AM	0	0	56	0
11:15 AM	0	0	75	0
11:30 AM	0	0	169	0
11:45 AM	0	0	67	0
12:00 PM	0	0	50	0
12:15 PM	0	0	39	0
12:30 PM	0	0	42	0
12:45 PM	0	0	71	0
1:00 PM	0	0	68	0
1:15 PM	0	0	57	0
1:30 PM	0	0	62	0
12:00 AM	0	0	0	0
4:00 PM	0	0	61	0
4:15 PM	0	0	67	0
4:30 PM	0	0	69	0
4:45 PM	0	0	64	0
5:00 PM	0	0	131	0
5:15 PM	0	0	184	0
5:30 PM	0	0	90	0
5:45 PM	0	0	68	0
6:00 PM	0	0	51	0
6:15 PM	0	0	56	0
6:30 PM	0	0	61	0
6:45 PM	0	0	70	0

Turning Movement Counts Data Sheet (Total)

Precision Systems, Inc.

Date: 2/27/2013 Location: Ward Circle Massachusetts Ave (East)
Duration: 7AM~2PM; 4PM~7PM Recorder: Jianwei/Wengang

Turning Movement Data - 15 Minutes Interval

Street	North Leg Circle				East Leg Massachusetts Ave				South Leg Circle				West Leg Massachusetts Ave			
Start	Right	Thru	Left	Ped	Right	Thru	Left	Ped	Right	Thru	Left	Ped	Right	Thru	Left	Ped
7:00 AM	0	0	0	0	88	0	0	15	212	28	0	15	0	0	0	0
7:15 AM	0	0	0	0	118	0	0	29	337	30	0	27	0	0	0	0
7:30 AM	**0**	**0**	**0**	**0**	**141**	**0**	**0**	**30**	**411**	**29**	**0**	**24**	**0**	**0**	**0**	**0**
7:45 AM	**0**	**0**	**0**	**0**	**189**	**0**	**0**	**10**	**381**	**39**	**0**	**10**	**0**	**0**	**0**	**0**
8:00 AM	**0**	**0**	**0**	**0**	**241**	**0**	**0**	**17**	**307**	**32**	**0**	**15**	**0**	**0**	**0**	**0**
8:15 AM	**0**	**0**	**0**	**0**	**184**	**0**	**0**	**37**	**269**	**40**	**0**	**40**	**0**	**0**	**0**	**0**
8:30 AM	0	0	0	0	209	0	0	58	270	47	0	46	0	0	0	0
8:45 AM	0	0	0	0	171	0	0	93	273	45	0	93	0	0	0	0
9:00 AM	0	0	0	0	163	0	0	21	287	36	0	15	0	0	0	0
9:15 AM	0	0	0	0	136	0	0	20	291	33	0	21	0	0	0	0
9:30 AM	0	0	0	0	146	0	0	25	223	32	0	28	0	0	0	0
9:45 AM	0	0	0	0	141	0	0	31	198	29	0	32	0	0	0	0
10:00 AM	0	0	0	0	122	0	0	51	157	21	0	52	0	0	0	0
10:15 AM	0	0	0	0	122	0	0	46	170	21	0	45	0	0	0	0
10:30 AM	0	0	0	0	126	0	0	20	157	31	0	20	0	0	0	0
10:45 AM	0	0	0	0	112	0	0	42	164	26	0	44	0	0	0	0
11:00 AM	0	0	0	0	116	0	0	34	140	30	0	32	0	0	0	0
11:15 AM	0	0	0	0	139	0	0	53	154	40	0	53	0	0	0	0
11:30 AM	0	0	0	0	147	0	0	110	167	50	0	107	0	0	0	0
11:45 AM	0	0	0	0	124	0	0	57	149	41	0	57	0	0	0	0
12:00 PM	0	0	0	0	160	0	0	32	154	35	0	31	0	0	0	0
12:15 PM	0	0	0	0	182	0	0	32	157	36	0	33	0	0	0	0
12:30 PM	0	0	0	0	185	0	0	33	140	36	0	33	0	0	0	0
12:45 PM	0	0	0	0	157	0	0	64	145	29	0	64	0	0	0	0
1:00 PM	0	0	0	0	130	0	0	53	130	34	0	48	0	0	0	0
1:15 PM	0	0	0	0	151	0	0	33	134	41	0	32	0	0	0	0
1:30 PM	0	0	0	0	145	0	0	34	175	31	0	35	0	0	0	0
1:45 PM	0	0	0	0	165	0	0	46	183	32	0	46	0	0	0	0
4:00 PM	0	0	0	0	255	0	0	47	123	40	0	48	0	0	0	0
4:15 PM	0	0	0	0	290	0	0	48	173	46	0	48	0	0	0	0
4:30 PM	0	0	0	0	278	0	0	58	151	40	0	57	0	0	0	0
4:45 PM	0	0	0	0	270	0	0	65	150	47	0	56	0	0	0	0
5:00 PM	0	0	0	0	261	0	0	80	175	51	0	81	0	0	0	0
5:15 PM	0	0	0	0	264	0	0	108	158	59	0	115	0	0	0	0
5:30 PM	**0**	**0**	**0**	**0**	**301**	**0**	**0**	**74**	**193**	**55**	**0**	**73**	**0**	**0**	**0**	**0**
5:45 PM	**0**	**0**	**0**	**0**	**307**	**0**	**0**	**34**	**193**	**51**	**0**	**36**	**0**	**0**	**0**	**0**
6:00 PM	**0**	**0**	**0**	**0**	**294**	**0**	**0**	**45**	**220**	**55**	**0**	**47**	**0**	**0**	**0**	**0**
6:15 PM	**0**	**0**	**0**	**0**	**304**	**0**	**0**	**52**	**179**	**40**	**0**	**53**	**0**	**0**	**0**	**0**
6:30 PM	0	0	0	0	250	0	0	54	167	47	0	54	0	0	0	0
6:45 PM	0	0	0	0	249	0	0	45	180	53	0	46	0	0	0	0
AM Peak	0	0	0	0	755	0	0	94	1368	140	0	89	0	0	0	0
PM Peak	0	0	0	0	1133	0	0	296	719	216	0	305	0	0	0	0

Turning Movement Counts Data Sheet (Total)

Precision Systems, Inc.

Date: 2/27/2013 Location: Ward Circle Massachusetts Ave (East)

Duration: 7AM~2PM; 4PM~7PM Recorder: Jianwei/Wengang

Turning Movement AM Peak Hour (7:30 AM ~ 8:30 AM)

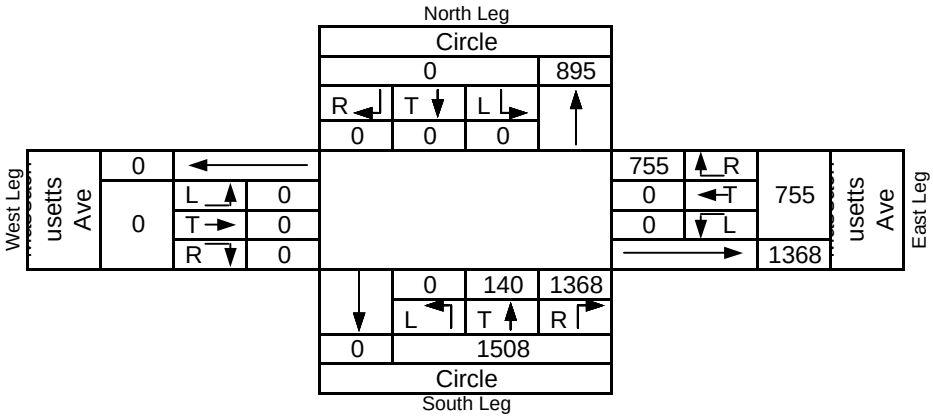

Turning Movement PM Peak Hour (5:30 PM ~ 6:30 PM)

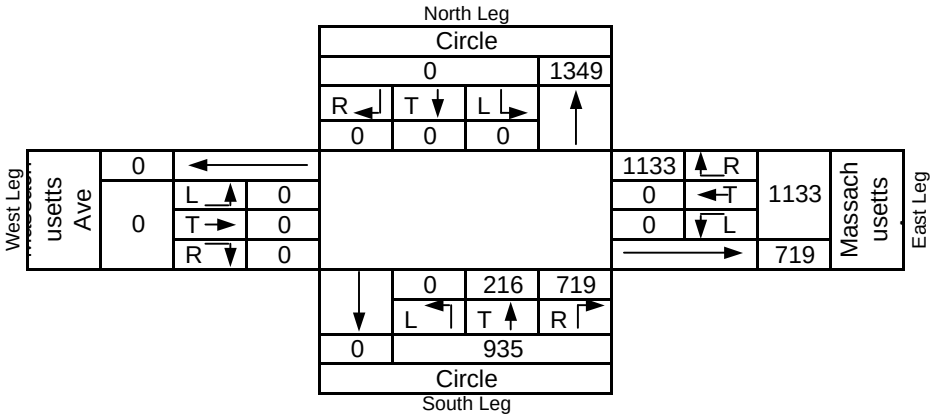

Turning Movement Counts Data Sheet (Car)

Precision Systems, Inc.

Date: 2/27/2013 Location: Ward Circle Massachusetts Ave (East)

Duration: 7AM~2PM; 4PM~7PM Recorder: Jianwei/Wengang

Turning Movement Data - 15 Minutes Interval

Street	North Leg Circle				East Leg Massachusetts Ave				South Leg Circle				West Leg Massachusetts Ave			
Start	Right	Thru	Left		Right	Thru	Left		Right	Thru	Left		Right	Thru	Left	
7:00 AM	0	0	0	0	85	0	0	15	208	25	0	15	0	0	0	0
7:15 AM	0	0	0	0	114	0	0	29	332	28	0	27	0	0	0	0
7:30 AM	0	0	0	0	137	0	0	30	408	29	0	24	0	0	0	0
7:45 AM	0	0	0	0	180	0	0	10	376	38	0	10	0	0	0	0
8:00 AM	0	0	0	0	237	0	0	17	301	31	0	15	0	0	0	0
8:15 AM	0	0	0	0	177	0	0	37	262	40	0	40	0	0	0	0
8:30 AM	0	0	0	0	205	0	0	58	264	47	0	46	0	0	0	0
8:45 AM	0	0	0	0	166	0	0	93	264	43	0	93	0	0	0	0
9:00 AM	0	0	0	0	158	0	0	21	282	36	0	15	0	0	0	0
9:15 AM	0	0	0	0	132	0	0	20	280	33	0	21	0	0	0	0
9:30 AM	0	0	0	0	140	0	0	25	219	32	0	28	0	0	0	0
9:45 AM	0	0	0	0	134	0	0	31	192	29	0	32	0	0	0	0
10:00 AM	0	0	0	0	113	0	0	51	151	21	0	52	0	0	0	0
10:15 AM	0	0	0	0	113	0	0	46	163	20	0	45	0	0	0	0
10:30 AM	0	0	0	0	118	0	0	20	152	29	0	20	0	0	0	0
10:45 AM	0	0	0	0	100	0	0	42	155	26	0	44	0	0	0	0
11:00 AM	0	0	0	0	111	0	0	34	137	26	0	32	0	0	0	0
11:15 AM	0	0	0	0	132	0	0	53	143	38	0	53	0	0	0	0
11:30 AM	0	0	0	0	141	0	0	110	162	47	0	107	0	0	0	0
11:45 AM	0	0	0	0	118	0	0	57	144	41	0	57	0	0	0	0
12:00 PM	0	0	0	0	158	0	0	32	149	32	0	31	0	0	0	0
12:15 PM	0	0	0	0	177	0	0	32	154	35	0	33	0	0	0	0
12:30 PM	0	0	0	0	178	0	0	33	138	36	0	33	0	0	0	0
12:45 PM	0	0	0	0	151	0	0	64	143	29	0	64	0	0	0	0
1:00 PM	0	0	0	0	129	0	0	53	125	33	0	48	0	0	0	0
1:15 PM	0	0	0	0	145	0	0	33	128	41	0	32	0	0	0	0
1:30 PM	0	0	0	0	141	0	0	34	170	30	0	35	0	0	0	0
1:45 PM	0	0	0	0	159	0	0	46	180	31	0	46	0	0	0	0
4:00 PM	0	0	0	0	251	0	0	47	119	40	0	48	0	0	0	0
4:15 PM	0	0	0	0	286	0	0	48	169	42	0	48	0	0	0	0
4:30 PM	0	0	0	0	276	0	0	58	149	39	0	57	0	0	0	0
4:45 PM	0	0	0	0	266	0	0	65	146	45	0	56	0	0	0	0
5:00 PM	0	0	0	0	257	0	0	80	170	48	0	81	0	0	0	0
5:15 PM	0	0	0	0	263	0	0	108	157	58	0	115	0	0	0	0
5:30 PM	0	0	0	0	297	0	0	74	192	54	0	73	0	0	0	0
5:45 PM	0	0	0	0	302	0	0	34	190	50	0	36	0	0	0	0
6:00 PM	0	0	0	0	288	0	0	45	219	55	0	47	0	0	0	0
6:15 PM	0	0	0	0	300	0	0	52	177	40	0	53	0	0	0	0
6:30 PM	0	0	0	0	247	0	0	54	166	47	0	54	0	0	0	0
6:45 PM	0	0	0	0	248	0	0	45	175	51	0	46	0	0	0	0
6:45 PM	0	0	0	0	0	0	0	0	0	0	0	0	0	0	0	0

Turning Movement Counts Data Sheet (Truck)

Precision Systems, Inc.

Date: 2/27/2013 Location: Ward Circle Massachusetts Ave (East)

Duration: 7AM~2PM; 4PM~7PM Recorder: Jianwei/Wengang

Turning Movement Data - 15 Minutes Interval

Street	North Leg Circle				East Leg Massachusetts Ave				South Leg Circle				West Leg Massachusetts Ave			
Start	Right	Thru	Left		Right	Thru	Left		Right	Thru	Left		Right	Thru	Left	
7:00 AM	0	0	0		3	0	0		4	3	0		0	0	0	
7:15 AM	0	0	0		4	0	0		5	2	0		0	0	0	
7:30 AM	0	0	0		4	0	0		3	0	0		0	0	0	
7:45 AM	0	0	0		9	0	0		5	1	0		0	0	0	
8:00 AM	0	0	0		4	0	0		6	1	0		0	0	0	
8:15 AM	0	0	0		7	0	0		7	0	0		0	0	0	
8:30 AM	0	0	0		4	0	0		6	0	0		0	0	0	
8:45 AM	0	0	0		5	0	0		9	2	0		0	0	0	
9:00 AM	0	0	0		5	0	0		5	0	0		0	0	0	
9:15 AM	0	0	0		4	0	0		11	0	0		0	0	0	
9:30 AM	0	0	0		6	0	0		4	0	0		0	0	0	
9:45 AM	0	0	0		7	0	0		6	0	0		0	0	0	
10:00 AM	0	0	0		9	0	0		6	0	0		0	0	0	
10:15 AM	0	0	0		9	0	0		7	1	0		0	0	0	
10:30 AM	0	0	0		8	0	0		5	2	0		0	0	0	
10:45 AM	0	0	0		12	0	0		9	0	0		0	0	0	
11:00 AM	0	0	0		5	0	0		3	4	0		0	0	0	
11:15 AM	0	0	0		7	0	0		11	2	0		0	0	0	
11:30 AM	0	0	0		6	0	0		5	3	0		0	0	0	
11:45 AM	0	0	0		6	0	0		5	0	0		0	0	0	
12:00 PM	0	0	0		2	0	0		5	3	0		0	0	0	
12:15 PM	0	0	0		5	0	0		3	1	0		0	0	0	
12:30 PM	0	0	0		7	0	0		2	0	0		0	0	0	
12:45 PM	0	0	0		6	0	0		2	0	0		0	0	0	
1:00 PM	0	0	0		1	0	0		5	1	0		0	0	0	
1:15 PM	0	0	0		6	0	0		6	0	0		0	0	0	
1:30 PM	0	0	0		4	0	0		5	1	0		0	0	0	
1:45 PM	0	0	0		6	0	0		3	1	0		0	0	0	
4:00 PM	0	0	0		4	0	0		4	0	0		0	0	0	
4:15 PM	0	0	0		4	0	0		4	4	0		0	0	0	
4:30 PM	0	0	0		2	0	0		2	1	0		0	0	0	
4:45 PM	0	0	0		4	0	0		4	2	0		0	0	0	
5:00 PM	0	0	0		4	0	0		5	3	0		0	0	0	
5:15 PM	0	0	0		1	0	0		1	1	0		0	0	0	
5:30 PM	0	0	0		4	0	0		1	1	0		0	0	0	
5:45 PM	0	0	0		5	0	0		3	1	0		0	0	0	
6:00 PM	0	0	0		6	0	0		1	0	0		0	0	0	
6:15 PM	0	0	0		4	0	0		2	0	0		0	0	0	
6:30 PM	0	0	0		3	0	0		1	0	0		0	0	0	
6:45 PM	0	0	0		1	0	0		5	2	0		0	0	0	

Turning Movement Counts Data Sheet (Bike)

Precision Systems, Inc.

Date: 2/27/2013 Location: Ward Circle Massachusetts Ave (East)

Duration: 7AM~2PM; 4PM~7PM Recorder: Jianwei/Wengang

Turning Movement Data - 15 Minutes Interval

Street	North Leg Circle				East Leg Massachusetts Ave				South Leg Circle				West Leg Massachusetts Ave			
Start	Right	Thru	Left		Right	Thru	Left		Right	Thru	Left		Right	Thru	Left	
7:00 AM	0	0	0		0	0	3		0	0	0		0	0	0	
7:15 AM	0	0	0		0	0	0		0	0	0		0	0	0	
7:30 AM	0	0	0		1	0	0		3	0	0		0	0	0	
7:45 AM	0	0	0		0	0	1		1	0	0		0	0	0	
8:00 AM	0	0	0		1	0	0		1	0	0		0	0	0	
8:15 AM	0	0	0		1	0	0		1	0	0		0	0	0	
8:30 AM	0	0	0		2	0	2		0	0	0		0	0	0	
8:45 AM	1	0	0		1	0	1		3	0	0		0	0	0	
9:00 AM	2	0	0		0	0	1		0	1	0		0	0	0	
9:15 AM	1	0	0		0	0	1		4	0	0		0	0	0	
9:30 AM	0	0	0		1	0	0		0	0	0		0	0	0	
9:45 AM	0	0	0		1	0	0		0	0	0		0	0	0	
10:00 AM	0	0	0		1	0	1		0	0	0		0	0	0	
10:15 AM	0	0	0		1	0	0		0	0	0		0	0	0	
10:30 AM	1	0	1		1	0	0		1	0	0		0	0	0	
10:45 AM	0	0	0		1	0	0		0	0	0		0	0	0	
11:00 AM	0	0	0		0	0	0		1	1	0		0	0	0	
11:15 AM	0	0	0		0	0	1		1	1	0		0	0	0	
11:30 AM	0	0	0		2	0	2		0	0	0		0	0	0	
11:45 AM	0	0	0		0	0	0		0	0	0		0	0	0	
12:00 PM	1	1	0		0	0	0		0	0	0		0	0	0	
12:15 PM	0	0	0		0	0	0		0	0	0		0	0	0	
12:30 PM	0	0	0		1	0	0		1	0	0		0	0	0	
12:45 PM	0	0	0		0	0	1		1	0	0		0	0	0	
1:00 PM	0	0	0		0	0	0		1	1	1		0	0	0	
1:15 PM	0	0	0		1	0	0		0	0	0		0	0	0	
1:30 PM	0	0	0		0	0	0		0	0	0		0	0	0	
1:45 PM	0	0	0		2	0	0		3	0	1		0	0	0	
4:00 PM	0	0	0		0	0	0		3	0	0		0	0	0	
4:15 PM	0	0	0		2	0	0		1	0	0		0	0	0	
4:30 PM	0	0	0		0	0	0		2	0	0		0	0	0	
4:45 PM	0	0	0		0	0	0		0	0	0		0	0	0	
5:00 PM	0	0	0		0	0	1		0	0	0		0	0	0	
5:15 PM	0	1	0		0	0	0		1	5	0		0	0	0	
5:30 PM	0	1	0		0	0	0		0	0	0		0	0	0	
5:45 PM	0	0	0		0	0	0		0	2	0		0	0	0	
6:00 PM	0	0	0		0	0	0		2	1	0		0	0	0	
6:15 PM	0	0	0		1	0	0		0	0	0		0	0	0	
6:30 PM	0	0	0		1	0	0		0	0	0		0	0	0	
6:45 PM	0	0	0		1	0	0		0	0	0		0	0	0	
6:45 PM	0	0	0		0	0	0		0	0	0		0	0	0	

Turning Movement Counts Data Sheet (Pedestrian)

Precision Systems, Inc.

Date: 2/27/2013 Location: Ward Circle Massachusetts Ave (East)
Duration: 7AM~2PM; 4PM~7PM Recorder: Jianwei/Wengang

Turning Movement Data - 15 Minutes Interval

Street	North Crosswalk Circle	East Crosswalk Massachusetts Ave	South Crosswalk Circle	West Crosswalk Massachusetts Ave
7:00 AM	0	15	15	0
7:15 AM	0	29	27	0
7:30 AM	0	30	24	0
7:45 AM	0	10	10	0
8:00 AM	0	17	15	0
8:15 AM	0	37	40	0
8:30 AM	0	58	46	0
8:45 AM	0	93	93	0
9:00 AM	0	21	15	0
9:15 AM	0	20	21	0
9:30 AM	0	25	28	0
9:45 AM	0	31	32	0
10:00 AM	0	51	52	0
10:15 AM	0	46	45	0
10:30 AM	0	20	20	0
10:45 AM	0	42	44	0
11:00 AM	0	34	32	0
11:15 AM	0	53	53	0
11:30 AM	0	110	107	0
11:45 AM	0	57	57	0
12:00 PM	0	32	31	0
12:15 PM	0	32	33	0
12:30 PM	0	33	33	0
12:45 PM	0	64	64	0
1:00 PM	0	53	48	0
1:15 PM	0	33	32	0
1:30 PM	0	34	35	0
12:00 AM	0	0	0	0
4:00 PM	0	47	48	0
4:15 PM	0	48	48	0
4:30 PM	0	58	57	0
4:45 PM	0	65	56	0
5:00 PM	0	80	81	0
5:15 PM	0	108	115	0
5:30 PM	0	74	73	0
5:45 PM	0	34	36	0
6:00 PM	0	45	47	0
6:15 PM	0	52	53	0
6:30 PM	0	54	54	0
6:45 PM	0	45	46	0

Turning Movement Counts Data Sheet (Total)

Precision Systems, Inc.

Date: 2/27/2013 Location: American University Ent and Massachusetts Ave

Duration: 7AM~2PM; 4PM~7PM Recorder: Jianwei/Wengang

Turning Movement Data - 15 Minutes Interval

Street	North Leg Entrance				East Leg Massachusetts Ave				South Leg Entrance				West Leg Massachusetts Ave			
Start	Right	Thru	Left	Ped	Right	Thru	Left	Ped	Right	Thru	Left	Ped	Right	Thru	Left	Ped
7:00 AM	1	8	0	1	8	66	4	5	6	2	5	1	6	205	2	8
7:15 AM	0	4	0	6	5	107	0	5	9	2	3	2	7	343	2	0
7:30 AM	1	2	0	6	3	103	1	6	10	1	3	5	8	363	1	2
7:45 AM	0	2	0	2	3	145	1	4	5	0	1	2	12	339	1	0
8:00 AM	**2**	**3**	**0**	**8**	**12**	**180**	**5**	**11**	**9**	**1**	**6**	**4**	**11**	**311**	**1**	**5**
8:15 AM	**1**	**7**	**1**	**4**	**17**	**140**	**0**	**9**	**10**	**1**	**9**	**3**	**16**	**311**	**3**	**10**
8:30 AM	**1**	**2**	**0**	**9**	**21**	**175**	**1**	**19**	**8**	**0**	**9**	**4**	**17**	**314**	**4**	**7**
8:45 AM	**1**	**5**	**0**	**13**	**11**	**151**	**1**	**29**	**8**	**3**	**6**	**5**	**23**	**297**	**9**	**7**
9:00 AM	1	4	1	7	11	157	1	21	12	4	11	4	27	296	7	3
9:15 AM	1	3	1	12	8	113	2	22	9	1	6	2	26	306	6	7
9:30 AM	0	0	0	5	7	134	11	18	6	3	3	4	12	229	8	4
9:45 AM	1	1	1	9	9	122	15	35	6	0	6	5	7	223	10	9
10:00 AM	1	0	1	7	4	105	11	38	5	1	3	3	7	173	1	4
10:15 AM	0	2	1	8	6	102	12	18	9	0	4	4	10	181	2	1
10:30 AM	1	1	1	2	6	113	8	17	12	0	6	8	10	148	1	3
10:45 AM	1	0	3	6	4	114	9	30	10	1	5	1	9	147	4	3
11:00 AM	0	0	2	1	7	94	12	25	4	2	6	7	10	150	6	1
11:15 AM	2	1	3	3	10	118	8	32	16	1	3	6	14	143	6	2
11:30 AM	3	1	4	14	17	130	14	103	14	0	2	5	10	165	6	6
11:45 AM	4	0	3	10	6	146	8	53	20	1	8	7	7	143	5	3
12:00 PM	2	0	4	4	4	141	11	29	10	1	14	4	9	149	3	3
12:15 PM	1	0	3	7	5	137	7	19	9	1	6	3	7	145	2	2
12:30 PM	1	1	0	2	0	162	9	34	9	0	5	7	10	134	2	4
12:45 PM	2	3	6	9	11	147	12	39	10	1	6	15	7	139	0	4
1:00 PM	7	2	5	4	4	111	13	72	18	1	8	11	4	116	1	4
1:15 PM	5	1	7	6	8	126	7	41	14	1	4	2	7	137	5	6
1:30 PM	0	0	2	6	6	127	6	53	13	2	1	7	7	164	4	0
1:45 PM	2	0	0	15	6	146	7	46	13	1	8	16	12	171	5	12
4:00 PM	4	2	4	9	6	185	2	40	11	0	12	4	10	140	0	5
4:15 PM	4	1	3	18	5	231	0	41	13	0	12	10	12	165	4	25
4:30 PM	5	4	6	11	8	235	1	37	14	0	19	9	23	160	2	9
4:45 PM	6	5	6	7	9	217	2	48	9	1	17	12	18	151	6	7
5:00 PM	6	6	9	15	11	222	5	67	25	2	18	16	20	174	6	8
5:15 PM	13	5	11	12	24	246	3	130	11	1	21	11	32	172	18	13
5:30 PM	**5**	**9**	**16**	**9**	**11**	**277**	**8**	**67**	**14**	**2**	**20**	**10**	**21**	**181**	**4**	**11**
5:45 PM	**7**	**7**	**13**	**13**	**14**	**284**	**9**	**47**	**15**	**3**	**12**	**16**	**18**	**193**	**1**	**8**
6:00 PM	**8**	**3**	**11**	**2**	**2**	**286**	**6**	**41**	**19**	**3**	**31**	**16**	**29**	**209**	**4**	**18**
6:15 PM	**3**	**6**	**7**	**5**	**7**	**269**	**8**	**47**	**14**	**2**	**24**	**9**	**28**	**192**	**2**	**7**
6:30 PM	5	0	7	8	3	237	20	36	19	4	18	3	8	160	5	8
6:45 PM	5	0	3	4	3	240	20	32	23	4	15	8	9	169	3	2
AM Peak	4	14	1	20	35	568	7	30	34	3	19	14	47	1324	6	17
PM Peak	31	27	49	49	60	1029	25	311	65	8	71	53	91	720	29	40

Turning Movement Counts Data Sheet (Total)

Precision Systems, Inc.

Date: 2/27/2013 Location: American University Ent and Massachusetts Ave

Duration: 7AM~2PM; 4PM~7PM Recorder: Jianwei/Wengang

Turning Movement AM Peak Hour (8:00 AM ~ 9:00 AM)

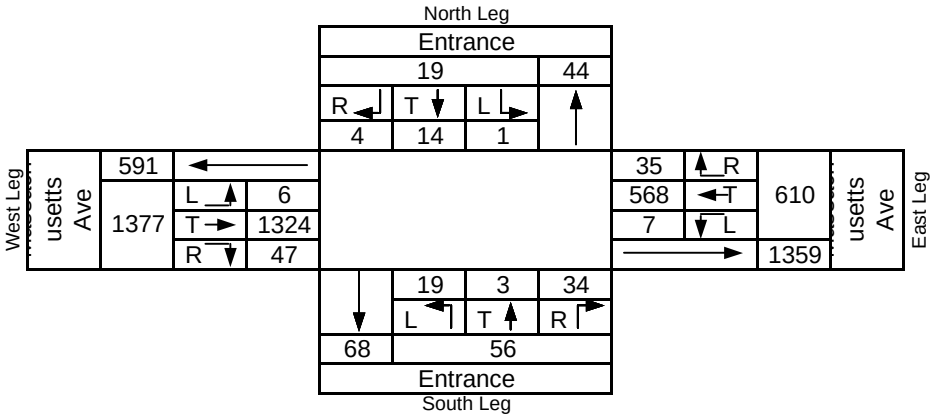

Turning Movement PM Peak Hour (5:30 PM ~ 6:30 PM)

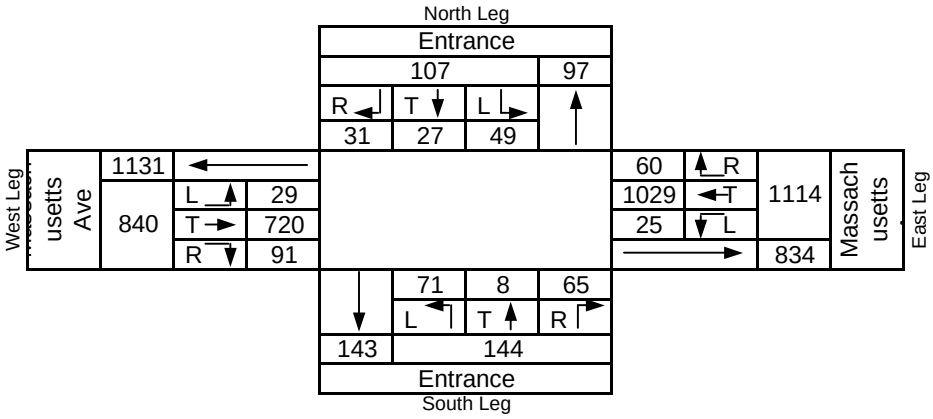

Turning Movement Counts Data Sheet (Car)

Precision Systems, Inc.

Date: 2/27/2013 Location: American University Ent and Massachusetts Ave

Duration: 7AM~2PM; 4PM~7PM Recorder: Jianwei/Wengang

Turning Movement Data - 15 Minutes Interval

Street	North Leg Entrance				East Leg Massachusetts Ave				South Leg Entrance				West Leg Massachusetts Ave			
Start	Right	Thru	Left		Right	Thru	Left		Right	Thru	Left		Right	Thru	Left	
7:00 AM	1	8	0	1	8	63	3	5	6	2	5	1	5	201	2	8
7:15 AM	0	4	0	6	5	101	0	5	7	2	2	2	6	336	2	0
7:30 AM	1	2	0	6	3	99	1	6	6	1	3	5	8	360	1	2
7:45 AM	0	2	0	2	3	142	0	4	2	0	1	2	12	331	1	0
8:00 AM	2	3	0	8	12	175	4	11	5	1	5	4	11	303	1	5
8:15 AM	1	7	1	4	17	135	0	9	9	0	9	3	15	305	3	10
8:30 AM	1	2	0	9	21	170	1	19	6	0	9	4	17	308	4	7
8:45 AM	1	5	0	13	11	141	1	29	5	3	5	5	21	286	9	7
9:00 AM	1	4	1	7	11	147	1	21	10	4	10	4	27	289	7	3
9:15 AM	1	3	1	12	8	107	2	22	6	1	6	2	26	293	6	7
9:30 AM	0	0	0	5	7	127	11	18	4	3	3	4	12	226	8	4
9:45 AM	1	1	1	9	9	116	13	35	4	0	6	5	7	215	10	9
10:00 AM	1	0	1	7	4	99	8	38	2	1	3	3	7	163	1	4
10:15 AM	0	2	1	8	6	98	11	18	6	0	3	4	9	176	2	1
10:30 AM	1	1	1	2	6	107	7	17	9	0	6	8	10	138	1	3
10:45 AM	1	0	3	6	4	104	7	30	8	1	2	1	9	142	4	3
11:00 AM	0	0	2	1	7	89	8	25	3	2	6	7	9	144	6	1
11:15 AM	2	1	3	3	10	110	6	32	8	1	2	6	13	135	6	2
11:30 AM	3	1	4	14	17	127	14	103	10	0	2	5	10	158	6	6
11:45 AM	4	0	3	10	6	140	8	53	18	0	7	7	7	139	5	3
12:00 PM	2	0	4	4	4	137	10	29	8	1	14	4	9	144	3	3
12:15 PM	1	0	3	7	5	133	5	19	6	1	5	3	7	140	2	2
12:30 PM	1	1	0	2	0	158	7	34	7	0	5	7	9	130	2	4
12:45 PM	2	3	6	9	11	141	11	39	8	1	6	15	7	137	0	4
1:00 PM	7	2	5	4	4	109	13	72	13	1	5	11	4	112	1	4
1:15 PM	5	1	7	6	8	122	7	41	11	1	3	2	5	130	5	6
1:30 PM	0	0	2	6	6	126	6	53	12	2	1	7	7	156	4	0
1:45 PM	2	0	0	15	6	138	7	46	10	1	8	16	11	166	5	12
4:00 PM	4	2	4	9	6	182	2	40	9	0	12	4	9	135	0	5
4:15 PM	4	1	3	18	5	223	0	41	12	0	10	10	12	159	4	25
4:30 PM	5	4	6	11	8	232	1	37	12	0	19	9	23	157	2	9
4:45 PM	6	5	6	7	9	213	2	48	7	1	17	12	18	146	6	7
5:00 PM	6	6	9	15	11	215	4	67	22	2	18	16	20	166	6	8
5:15 PM	13	5	11	12	24	243	3	130	9	1	21	11	32	171	18	13
5:30 PM	5	9	15	9	11	277	4	67	14	0	20	10	21	177	4	11
5:45 PM	7	7	13	13	14	284	3	47	15	0	12	16	18	189	1	8
6:00 PM	8	3	11	2	2	286	1	41	19	1	31	16	29	205	4	18
6:15 PM	3	6	7	5	7	269	6	47	14	0	24	9	27	188	2	7
6:30 PM	5	0	7	8	3	237	17	36	19	2	18	3	8	157	5	8
6:45 PM	5	0	3	4	3	240	17	32	23	1	15	8	9	164	3	2
6:45 PM	0	0	0	0	0	0	0	0	0	0	0	0	0	0	0	0

Turning Movement Counts Data Sheet (Truck)

Precision Systems, Inc.

Date: 2/27/2013 Location: American University Ent and Massachusetts Ave

Duration: 7AM~2PM; 4PM~7PM Recorder: Jianwei/Wengang

Turning Movement Data - 15 Minutes Interval

Street	North Leg Entrance				East Leg Massachusetts Ave				South Leg Entrance				West Leg Massachusetts Ave			
Start	Right	Thru	Left		Right	Thru	Left		Right	Thru	Left		Right	Thru	Left	
7:00 AM	0	0	0		0	3	1		0	0	0		1	4	0	
7:15 AM	0	0	0		0	6	0		2	0	1		1	7	0	
7:30 AM	0	0	0		0	4	0		4	0	0		0	3	0	
7:45 AM	0	0	0		0	3	1		3	0	0		0	8	0	
8:00 AM	0	0	0		0	5	1		4	0	1		0	8	0	
8:15 AM	0	0	0		0	5	0		1	1	0		1	6	0	
8:30 AM	0	0	0		0	5	0		2	0	0		0	6	0	
8:45 AM	0	0	0		0	10	0		3	0	1		2	11	0	
9:00 AM	0	0	0		0	10	0		2	0	1		0	7	0	
9:15 AM	0	0	0		0	6	0		3	0	0		0	13	0	
9:30 AM	0	0	0		0	7	0		2	0	0		0	3	0	
9:45 AM	0	0	0		0	6	2		2	0	0		0	8	0	
10:00 AM	0	0	0		0	6	3		3	0	0		0	10	0	
10:15 AM	0	0	0		0	4	1		3	0	1		1	5	0	
10:30 AM	0	0	0		0	6	1		3	0	0		0	10	0	
10:45 AM	0	0	0		0	10	2		2	0	3		0	5	0	
11:00 AM	0	0	0		0	5	4		1	0	0		1	6	0	
11:15 AM	0	0	0		0	8	2		8	0	1		1	8	0	
11:30 AM	0	0	0		0	3	0		4	0	0		0	7	0	
11:45 AM	0	0	0		0	6	0		2	1	1		0	4	0	
12:00 PM	0	0	0		0	4	1		2	0	0		0	5	0	
12:15 PM	0	0	0		0	4	2		3	0	1		0	5	0	
12:30 PM	0	0	0		0	4	2		2	0	0		1	4	0	
12:45 PM	0	0	0		0	6	1		2	0	0		0	2	0	
1:00 PM	0	0	0		0	2	0		5	0	3		0	4	0	
1:15 PM	0	0	0		0	4	0		3	0	1		2	7	0	
1:30 PM	0	0	0		0	1	0		1	0	0		0	8	0	
1:45 PM	0	0	0		0	8	0		3	0	0		1	5	0	
4:00 PM	0	0	0		0	3	0		2	0	0		1	5	0	
4:15 PM	0	0	0		0	8	0		1	0	2		0	6	0	
4:30 PM	0	0	0		0	3	0		2	0	0		0	3	0	
4:45 PM	0	0	0		0	4	0		2	0	0		0	5	0	
5:00 PM	0	0	0		0	7	1		3	0	0		0	8	0	
5:15 PM	0	0	0		0	3	0		2	0	0		0	1	0	
5:30 PM	0	0	1		0	0	4		0	2	0		0	4	0	
5:45 PM	0	0	0		0	0	6		0	3	0		0	4	0	
6:00 PM	0	0	0		0	0	5		0	2	0		0	4	0	
6:15 PM	0	0	0		0	0	2		0	2	0		1	4	0	
6:30 PM	0	0	0		0	0	3		0	2	0		0	3	0	
6:45 PM	0	0	0		0	0	3		0	3	0		0	5	0	

Turning Movement Counts Data Sheet (Bike)

Precision Systems, Inc.

Date: 2/27/2013 Location: American University Ent and Massachusetts Ave

Duration: 7AM~2PM; 4PM~7PM Recorder: Jianwei/Wengang

Turning Movement Data - 15 Minutes Interval

Street	North Leg Entrance				East Leg Massachusetts Ave				South Leg Entrance				West Leg Massachusetts Ave			
Start	Right	Thru	Left		Right	Thru	Left		Right	Thru	Left		Right	Thru	Left	
7:00 AM	0	0	0		0	0	0		0	0	0		0	0	0	
7:15 AM	0	0	0		0	0	0		1	0	0		0	0	0	
7:30 AM	0	0	0		0	0	0		1	0	0		0	5	0	
7:45 AM	0	0	0		0	1	0		0	0	0		0	1	0	
8:00 AM	0	0	0		0	0	0		0	0	0		0	1	0	
8:15 AM	0	1	0		0	1	1		0	0	0		1	3	0	
8:30 AM	0	0	0		0	1	0		1	0	0		0	0	0	
8:45 AM	0	0	0		0	0	0		1	0	0		1	2	0	
9:00 AM	0	0	0		0	1	0		0	0	0		0	0	0	
9:15 AM	0	0	0		0	1	0		0	0	0		0	3	0	
9:30 AM	0	0	0		0	0	1		0	0	0		0	0	0	
9:45 AM	0	0	0		0	0	1		0	0	0		1	0	0	
10:00 AM	0	0	0		1	0	0		0	0	0		0	0	0	
10:15 AM	0	0	0		0	1	0		0	0	0		0	0	0	
10:30 AM	0	0	0		0	1	0		0	0	0		1	1	0	
10:45 AM	0	0	0		0	1	0		0	0	0		0	0	0	
11:00 AM	0	0	0		0	0	0		0	0	0		0	0	0	
11:15 AM	1	1	0		0	0	0		0	0	0		0	0	0	
11:30 AM	0	0	0		0	0	0		0	0	0		0	0	0	
11:45 AM	0	0	0		0	0	0		0	0	0		2	0	0	
12:00 PM	0	0	0		0	0	0		0	1	0		0	0	0	
12:15 PM	0	0	0		0	0	0		0	0	0		0	0	0	
12:30 PM	0	0	0		0	0	0		0	0	0		0	0	0	
12:45 PM	0	0	0		0	0	0		0	0	0		0	0	0	
1:00 PM	0	0	0		1	1	0		0	0	0		0	0	0	
1:15 PM	0	0	0		0	2	0		0	0	0		0	0	0	
1:30 PM	0	0	0		1	1	0		1	0	0		0	0	0	
1:45 PM	0	0	0		1	1	0		0	0	0		0	2	0	
4:00 PM	0	0	0		0	0	0		1	0	1		0	0	0	
4:15 PM	0	0	0		0	2	1		0	0	0		0	0	0	
4:30 PM	0	0	0		0	1	0		0	0	0		0	1	0	
4:45 PM	0	0	0		0	1	0		0	0	0		0	0	0	
5:00 PM	0	0	0		0	1	0		2	0	0		0	1	0	
5:15 PM	0	0	0		0	1	1		0	0	0		1	2	0	
5:30 PM	0	0	0		0	0	0		0	0	0		0	0	0	
5:45 PM	0	0	0		0	1	0		0	0	0		0	1	0	
6:00 PM	0	0	0		0	1	0		0	0	2		0	1	0	
6:15 PM	0	0	0		0	0	0		0	0	1		0	1	0	
6:30 PM	0	0	0		0	1	0		0	0	0		0	1	0	
6:45 PM	0	0	0		0	1	0		0	0	0		0	1	0	
6:45 PM	0	0	0		0	0	0		0	0	0		0	0	0	

Turning Movement Counts Data Sheet (Pedestrian)

Precision Systems, Inc.

Date: 2/27/2013 Location: American University Ent and Massachusetts Ave
Duration: 7AM~2PM; 4PM~7PM Recorder: Jianwei/Wengang

Turning Movement Data - 15 Minutes Interval

Street	North Crosswalk Entrance	East Crosswalk Massachusetts Ave	South Crosswalk Entrance	West Crosswalk Massachusetts Ave
7:00 AM	1	5	1	8
7:15 AM	6	5	2	0
7:30 AM	6	6	5	2
7:45 AM	2	4	2	0
8:00 AM	8	11	4	5
8:15 AM	4	9	3	10
8:30 AM	9	19	4	7
8:45 AM	13	29	5	7
9:00 AM	7	21	4	3
9:15 AM	12	22	2	7
9:30 AM	5	18	4	4
9:45 AM	9	35	5	9
10:00 AM	7	38	3	4
10:15 AM	8	18	4	1
10:30 AM	2	17	8	3
10:45 AM	6	30	1	3
11:00 AM	1	25	7	1
11:15 AM	3	32	6	2
11:30 AM	14	103	5	6
11:45 AM	10	53	7	3
12:00 PM	4	29	4	3
12:15 PM	7	19	3	2
12:30 PM	2	34	7	4
12:45 PM	9	39	15	4
1:00 PM	4	72	11	4
1:15 PM	6	41	2	6
1:30 PM	6	53	7	0
12:00 AM	0	0	0	0
4:00 PM	9	40	4	5
4:15 PM	18	41	10	25
4:30 PM	11	37	9	9
4:45 PM	7	48	12	7
5:00 PM	15	67	16	8
5:15 PM	12	130	11	13
5:30 PM	9	67	10	11
5:45 PM	13	47	16	8
6:00 PM	2	41	16	18
6:15 PM	5	47	9	7
6:30 PM	8	36	3	8
6:45 PM	4	32	8	2

Turning Movement Counts Data Sheet (Total)

Precision Systems, Inc.

Date: 2/27/2013 Location: American University Ent and Massachusetts Ave

Duration: 7AM~2PM; 4PM~7PM Recorder: Jianwei/Wengang

Turning Movement Data - 15 Minutes Interval

Street	North Leg Entrance				East Leg Massachusetts Ave				South Leg Entrance				West Leg Massachusetts Ave			
Start	Right	Thru	Left	Ped	Right	Thru	Left	Ped	Right	Thru	Left	Ped	Right	Thru	Left	Ped
7:00 AM	1	8	0	1	8	66	4	5	6	2	5	1	6	205	2	8
7:15 AM	0	4	0	6	5	107	0	5	9	2	3	2	7	343	2	0
7:30 AM	1	2	0	6	3	103	1	6	10	1	3	5	8	363	1	2
7:45 AM	0	2	0	2	3	145	1	4	5	0	1	2	12	339	1	0
8:00 AM	**2**	**3**	**0**	**8**	**12**	**180**	**5**	**11**	**9**	**1**	**6**	**4**	**11**	**311**	**1**	**5**
8:15 AM	**1**	**7**	**1**	**4**	**17**	**140**	**0**	**9**	**10**	**1**	**9**	**3**	**16**	**311**	**3**	**10**
8:30 AM	**1**	**2**	**0**	**9**	**21**	**175**	**1**	**19**	**8**	**0**	**9**	**4**	**17**	**314**	**4**	**7**
8:45 AM	**1**	**5**	**0**	**13**	**11**	**151**	**1**	**29**	**8**	**3**	**6**	**5**	**23**	**297**	**9**	**7**
9:00 AM	1	4	1	7	11	157	1	21	12	4	11	4	27	296	7	3
9:15 AM	1	3	1	12	8	113	2	22	9	1	6	2	26	306	6	7
9:30 AM	0	0	0	5	7	134	11	18	6	3	3	4	12	229	8	4
9:45 AM	1	1	1	9	9	122	15	35	6	0	6	5	7	223	10	9
10:00 AM	1	0	1	7	4	105	11	38	5	1	3	3	7	173	1	4
10:15 AM	0	2	1	8	6	102	12	18	9	0	4	4	10	181	2	1
10:30 AM	1	1	1	2	6	113	8	17	12	0	6	8	10	148	1	3
10:45 AM	1	0	3	6	4	114	9	30	10	1	5	1	9	147	4	3
11:00 AM	0	0	2	1	7	94	12	25	4	2	6	7	10	150	6	1
11:15 AM	2	1	3	3	10	118	8	32	16	1	3	6	14	143	6	2
11:30 AM	3	1	4	14	17	130	14	103	14	0	2	5	10	165	6	6
11:45 AM	4	0	3	10	6	146	8	53	20	1	8	7	7	143	5	3
12:00 PM	2	0	4	4	4	141	11	29	10	1	14	4	9	149	3	3
12:15 PM	1	0	3	7	5	137	7	19	9	1	6	3	7	145	2	2
12:30 PM	1	1	0	2	0	162	9	34	9	0	5	7	10	134	2	4
12:45 PM	2	3	6	9	11	147	12	39	10	1	6	15	7	139	0	4
1:00 PM	7	2	5	4	4	111	13	72	18	1	8	11	4	116	1	4
1:15 PM	5	1	7	6	8	126	7	41	14	1	4	2	7	137	5	6
1:30 PM	0	0	2	6	6	127	6	53	13	2	1	7	7	164	4	0
1:45 PM	2	0	0	15	6	146	7	46	13	1	8	16	12	171	5	12
4:00 PM	4	2	4	9	6	185	2	40	11	0	12	4	10	140	0	5
4:15 PM	4	1	3	18	5	231	0	41	13	0	12	10	12	165	4	25
4:30 PM	5	4	6	11	8	235	1	37	14	0	19	9	23	160	2	9
4:45 PM	6	5	6	7	9	217	2	48	9	1	17	12	18	151	6	7
5:00 PM	6	6	9	15	11	222	5	67	25	2	18	16	20	174	6	8
5:15 PM	13	5	11	12	24	246	3	130	11	1	21	11	32	172	18	13
5:30 PM	**5**	**9**	**16**	**9**	**11**	**277**	**8**	**67**	**14**	**2**	**20**	**10**	**21**	**181**	**4**	**11**
5:45 PM	**7**	**7**	**13**	**13**	**14**	**284**	**9**	**47**	**15**	**3**	**12**	**16**	**18**	**193**	**1**	**8**
6:00 PM	**8**	**3**	**11**	**2**	**2**	**286**	**6**	**41**	**19**	**3**	**31**	**16**	**29**	**209**	**4**	**18**
6:15 PM	**3**	**6**	**7**	**5**	**7**	**269**	**8**	**47**	**14**	**2**	**24**	**9**	**28**	**192**	**2**	**7**
6:30 PM	5	0	7	8	3	237	20	36	19	4	18	3	8	160	5	8
6:45 PM	5	0	3	4	3	240	20	32	23	4	15	8	9	169	3	2
AM Peak	4	14	1	20	35	568	7	30	34	3	19	14	47	1324	6	17
PM Peak	31	27	49	49	60	1029	25	311	65	8	71	53	91	720	29	40

Turning Movement Counts Data Sheet (Total)

Precision Systems, Inc.

Date: 2/27/2013 Location: American University Ent and Massachusetts Ave

Duration: 7AM~2PM; 4PM~7PM Recorder: Jianwei/Wengang

Turning Movement AM Peak Hour (8:00 AM ~ 9:00 AM)

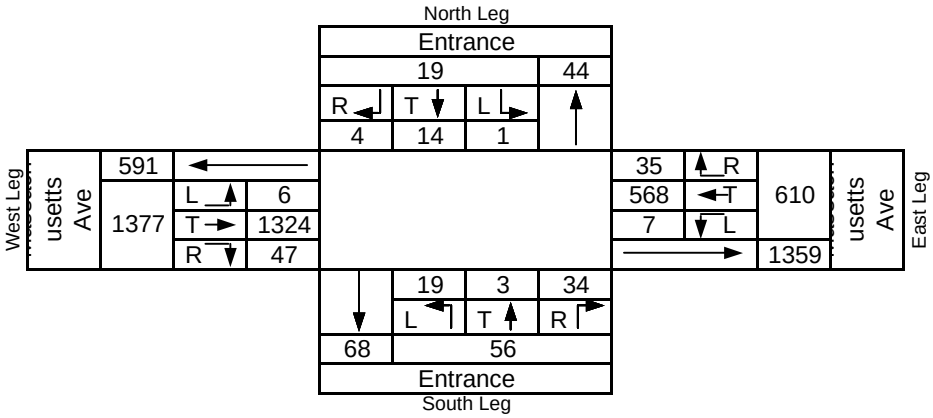

Turning Movement PM Peak Hour (5:30 PM ~ 6:30 PM)

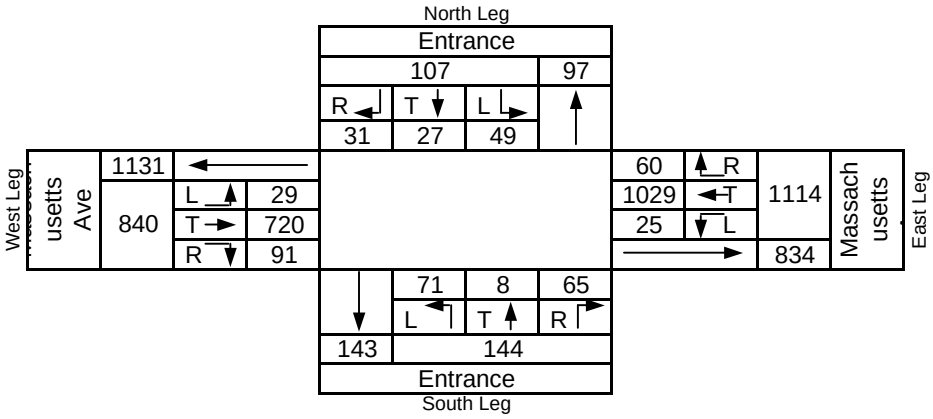

Turning Movement Counts Data Sheet (Car)

Precision Systems, Inc.

Date: 2/27/2013 Location: American University Ent and Massachusetts Ave

Duration: 7AM~2PM; 4PM~7PM Recorder: Jianwei/Wengang

Turning Movement Data - 15 Minutes Interval

Street	North Leg Entrance				East Leg Massachusetts Ave				South Leg Entrance				West Leg Massachusetts Ave			
Start	Right	Thru	Left		Right	Thru	Left		Right	Thru	Left		Right	Thru	Left	
7:00 AM	1	8	0	1	8	63	3	5	6	2	5	1	5	201	2	8
7:15 AM	0	4	0	6	5	101	0	5	7	2	2	2	6	336	2	0
7:30 AM	1	2	0	6	3	99	1	6	6	1	3	5	8	360	1	2
7:45 AM	0	2	0	2	3	142	0	4	2	0	1	2	12	331	1	0
8:00 AM	2	3	0	8	12	175	4	11	5	1	5	4	11	303	1	5
8:15 AM	1	7	1	4	17	135	0	9	9	0	9	3	15	305	3	10
8:30 AM	1	2	0	9	21	170	1	19	6	0	9	4	17	308	4	7
8:45 AM	1	5	0	13	11	141	1	29	5	3	5	5	21	286	9	7
9:00 AM	1	4	1	7	11	147	1	21	10	4	10	4	27	289	7	3
9:15 AM	1	3	1	12	8	107	2	22	6	1	6	2	26	293	6	7
9:30 AM	0	0	0	5	7	127	11	18	4	3	3	4	12	226	8	4
9:45 AM	1	1	1	9	9	116	13	35	4	0	6	5	7	215	10	9
10:00 AM	1	0	1	7	4	99	8	38	2	1	3	3	7	163	1	4
10:15 AM	0	2	1	8	6	98	11	18	6	0	3	4	9	176	2	1
10:30 AM	1	1	1	2	6	107	7	17	9	0	6	8	10	138	1	3
10:45 AM	1	0	3	6	4	104	7	30	8	1	2	1	9	142	4	3
11:00 AM	0	0	2	1	7	89	8	25	3	2	6	7	9	144	6	1
11:15 AM	2	1	3	3	10	110	6	32	8	1	2	6	13	135	6	2
11:30 AM	3	1	4	14	17	127	14	103	10	0	2	5	10	158	6	6
11:45 AM	4	0	3	10	6	140	8	53	18	0	7	7	7	139	5	3
12:00 PM	2	0	4	4	4	137	10	29	8	1	14	4	9	144	3	3
12:15 PM	1	0	3	7	5	133	5	19	6	1	5	3	7	140	2	2
12:30 PM	1	1	0	2	0	158	7	34	7	0	5	7	9	130	2	4
12:45 PM	2	3	6	9	11	141	11	39	8	1	6	15	7	137	0	4
1:00 PM	7	2	5	4	4	109	13	72	13	1	5	11	4	112	1	4
1:15 PM	5	1	7	6	8	122	7	41	11	1	3	2	5	130	5	6
1:30 PM	0	0	2	6	6	126	6	53	12	2	1	7	7	156	4	0
1:45 PM	2	0	0	15	6	138	7	46	10	1	8	16	11	166	5	12
4:00 PM	4	2	4	9	6	182	2	40	9	0	12	4	9	135	0	5
4:15 PM	4	1	3	18	5	223	0	41	12	0	10	10	12	159	4	25
4:30 PM	5	4	6	11	8	232	1	37	12	0	19	9	23	157	2	9
4:45 PM	6	5	6	7	9	213	2	48	7	1	17	12	18	146	6	7
5:00 PM	6	6	9	15	11	215	4	67	22	2	18	16	20	166	6	8
5:15 PM	13	5	11	12	24	243	3	130	9	1	21	11	32	171	18	13
5:30 PM	5	9	15	9	11	277	4	67	14	0	20	10	21	177	4	11
5:45 PM	7	7	13	13	14	284	3	47	15	0	12	16	18	189	1	8
6:00 PM	8	3	11	2	2	286	1	41	19	1	31	16	29	205	4	18
6:15 PM	3	6	7	5	7	269	6	47	14	0	24	9	27	188	2	7
6:30 PM	5	0	7	8	3	237	17	36	19	2	18	3	8	157	5	8
6:45 PM	5	0	3	4	3	240	17	32	23	1	15	8	9	164	3	2
6:45 PM	0	0	0	0	0	0	0	0	0	0	0	0	0	0	0	0

Turning Movement Counts Data Sheet (Truck)

Precision Systems, Inc.

Date: 2/27/2013 Location: American University Ent and Massachusetts Ave

Duration: 7AM~2PM; 4PM~7PM Recorder: Jianwei/Wengang

Turning Movement Data - 15 Minutes Interval

Street	North Leg Entrance				East Leg Massachusetts Ave				South Leg Entrance				West Leg Massachusetts Ave			
Start	Right	Thru	Left		Right	Thru	Left		Right	Thru	Left		Right	Thru	Left	
7:00 AM	0	0	0		0	3	1		0	0	0		1	4	0	
7:15 AM	0	0	0		0	6	0		2	0	1		1	7	0	
7:30 AM	0	0	0		0	4	0		4	0	0		0	3	0	
7:45 AM	0	0	0		0	3	1		3	0	0		0	8	0	
8:00 AM	0	0	0		0	5	1		4	0	1		0	8	0	
8:15 AM	0	0	0		0	5	0		1	1	0		1	6	0	
8:30 AM	0	0	0		0	5	0		2	0	0		0	6	0	
8:45 AM	0	0	0		0	10	0		3	0	1		2	11	0	
9:00 AM	0	0	0		0	10	0		2	0	1		0	7	0	
9:15 AM	0	0	0		0	6	0		3	0	0		0	13	0	
9:30 AM	0	0	0		0	7	0		2	0	0		0	3	0	
9:45 AM	0	0	0		0	6	2		2	0	0		0	8	0	
10:00 AM	0	0	0		0	6	3		3	0	0		0	10	0	
10:15 AM	0	0	0		0	4	1		3	0	1		1	5	0	
10:30 AM	0	0	0		0	6	1		3	0	0		0	10	0	
10:45 AM	0	0	0		0	10	2		2	0	3		0	5	0	
11:00 AM	0	0	0		0	5	4		1	0	0		1	6	0	
11:15 AM	0	0	0		0	8	2		8	0	1		1	8	0	
11:30 AM	0	0	0		0	3	0		4	0	0		0	7	0	
11:45 AM	0	0	0		0	6	0		2	1	1		0	4	0	
12:00 PM	0	0	0		0	4	1		2	0	0		0	5	0	
12:15 PM	0	0	0		0	4	2		3	0	1		0	5	0	
12:30 PM	0	0	0		0	4	2		2	0	0		1	4	0	
12:45 PM	0	0	0		0	6	1		2	0	0		0	2	0	
1:00 PM	0	0	0		0	2	0		5	0	3		0	4	0	
1:15 PM	0	0	0		0	4	0		3	0	1		2	7	0	
1:30 PM	0	0	0		0	1	0		1	0	0		0	8	0	
1:45 PM	0	0	0		0	8	0		3	0	0		1	5	0	
4:00 PM	0	0	0		0	3	0		2	0	0		1	5	0	
4:15 PM	0	0	0		0	8	0		1	0	2		0	6	0	
4:30 PM	0	0	0		0	3	0		2	0	0		0	3	0	
4:45 PM	0	0	0		0	4	0		2	0	0		0	5	0	
5:00 PM	0	0	0		0	7	1		3	0	0		0	8	0	
5:15 PM	0	0	0		0	3	0		2	0	0		0	1	0	
5:30 PM	0	0	1		0	0	4		0	2	0		0	4	0	
5:45 PM	0	0	0		0	0	6		0	3	0		0	4	0	
6:00 PM	0	0	0		0	0	5		0	2	0		0	4	0	
6:15 PM	0	0	0		0	0	2		0	2	0		1	4	0	
6:30 PM	0	0	0		0	0	3		0	2	0		0	3	0	
6:45 PM	0	0	0		0	0	3		0	3	0		0	5	0	

Turning Movement Counts Data Sheet (Bike)

Precision Systems, Inc.

Date: 2/27/2013 Location: American University Ent and Massachusetts Ave

Duration: 7AM~2PM; 4PM~7PM Recorder: Jianwei/Wengang

Turning Movement Data - 15 Minutes Interval

Street	North Leg Entrance				East Leg Massachusetts Ave				South Leg Entrance				West Leg Massachusetts Ave			
Start	Right	Thru	Left		Right	Thru	Left		Right	Thru	Left		Right	Thru	Left	
7:00 AM	0	0	0		0	0	0		0	0	0		0	0	0	
7:15 AM	0	0	0		0	0	0		1	0	0		0	0	0	
7:30 AM	0	0	0		0	0	0		1	0	0		0	5	0	
7:45 AM	0	0	0		0	1	0		0	0	0		0	1	0	
8:00 AM	0	0	0		0	0	0		0	0	0		0	1	0	
8:15 AM	0	1	0		0	1	1		0	0	0		1	3	0	
8:30 AM	0	0	0		0	1	0		1	0	0		0	0	0	
8:45 AM	0	0	0		0	0	0		1	0	0		1	2	0	
9:00 AM	0	0	0		0	1	0		0	0	0		0	0	0	
9:15 AM	0	0	0		0	1	0		0	0	0		0	3	0	
9:30 AM	0	0	0		0	0	1		0	0	0		0	0	0	
9:45 AM	0	0	0		0	0	1		0	0	0		1	0	0	
10:00 AM	0	0	0		1	0	0		0	0	0		0	0	0	
10:15 AM	0	0	0		0	1	0		0	0	0		0	0	0	
10:30 AM	0	0	0		0	1	0		0	0	0		1	1	0	
10:45 AM	0	0	0		0	1	0		0	0	0		0	0	0	
11:00 AM	0	0	0		0	0	0		0	0	0		0	0	0	
11:15 AM	1	1	0		0	0	0		0	0	0		0	0	0	
11:30 AM	0	0	0		0	0	0		0	0	0		0	0	0	
11:45 AM	0	0	0		0	0	0		0	0	0		2	0	0	
12:00 PM	0	0	0		0	0	0		0	1	0		0	0	0	
12:15 PM	0	0	0		0	0	0		0	0	0		0	0	0	
12:30 PM	0	0	0		0	0	0		0	0	0		0	0	0	
12:45 PM	0	0	0		0	0	0		0	0	0		0	0	0	
1:00 PM	0	0	0		1	1	0		0	0	0		0	0	0	
1:15 PM	0	0	0		0	2	0		0	0	0		0	0	0	
1:30 PM	0	0	0		1	1	0		1	0	0		0	0	0	
1:45 PM	0	0	0		1	1	0		0	0	0		0	2	0	
4:00 PM	0	0	0		0	0	0		1	0	1		0	0	0	
4:15 PM	0	0	0		0	2	1		0	0	0		0	0	0	
4:30 PM	0	0	0		0	1	0		0	0	0		0	1	0	
4:45 PM	0	0	0		0	1	0		0	0	0		0	0	0	
5:00 PM	0	0	0		0	1	0		2	0	0		0	1	0	
5:15 PM	0	0	0		0	1	1		0	0	0		1	2	0	
5:30 PM	0	0	0		0	0	0		0	0	0		0	0	0	
5:45 PM	0	0	0		0	1	0		0	0	0		0	1	0	
6:00 PM	0	0	0		0	1	0		0	0	2		0	1	0	
6:15 PM	0	0	0		0	0	0		0	0	1		0	1	0	
6:30 PM	0	0	0		0	1	0		0	0	0		0	1	0	
6:45 PM	0	0	0		0	1	0		0	0	0		0	1	0	
6:45 PM	0	0	0		0	0	0		0	0	0		0	0	0	

Turning Movement Counts Data Sheet (Pedestrian)

Precision Systems, Inc.

Date: 2/27/2013 Location: American University Ent and Massachusetts Ave
Duration: 7AM~2PM; 4PM~7PM Recorder: Jianwei/Wengang

Turning Movement Data - 15 Minutes Interval

Street	North Crosswalk Entrance	East Crosswalk Massachusetts Ave	South Crosswalk Entrance	West Crosswalk Massachusetts Ave
7:00 AM	1	5	1	8
7:15 AM	6	5	2	0
7:30 AM	6	6	5	2
7:45 AM	2	4	2	0
8:00 AM	8	11	4	5
8:15 AM	4	9	3	10
8:30 AM	9	19	4	7
8:45 AM	13	29	5	7
9:00 AM	7	21	4	3
9:15 AM	12	22	2	7
9:30 AM	5	18	4	4
9:45 AM	9	35	5	9
10:00 AM	7	38	3	4
10:15 AM	8	18	4	1
10:30 AM	2	17	8	3
10:45 AM	6	30	1	3
11:00 AM	1	25	7	1
11:15 AM	3	32	6	2
11:30 AM	14	103	5	6
11:45 AM	10	53	7	3
12:00 PM	4	29	4	3
12:15 PM	7	19	3	2
12:30 PM	2	34	7	4
12:45 PM	9	39	15	4
1:00 PM	4	72	11	4
1:15 PM	6	41	2	6
1:30 PM	6	53	7	0
12:00 AM	0	0	0	0
4:00 PM	9	40	4	5
4:15 PM	18	41	10	25
4:30 PM	11	37	9	9
4:45 PM	7	48	12	7
5:00 PM	15	67	16	8
5:15 PM	12	130	11	13
5:30 PM	9	67	10	11
5:45 PM	13	47	16	8
6:00 PM	2	41	16	18
6:15 PM	5	47	9	7
6:30 PM	8	36	3	8
6:45 PM	4	32	8	2

Turning Movement Counts Data Sheet (Total)

Precision Systems, Inc.

Date: 2/27/2013 Location: Nebraska Ave and New Mexico Ave
Duration: 7AM~2PM; 4PM~7PM Recorder: Jianwei/Wengang

Turning Movement Data - 15 Minutes Interval

Street	North Leg Nebraska				East Leg New Mexico				South Leg Nebraska				West Leg Driveway			
Start	Right	Thru	Left	Ped	Right	Thru	Left	Ped	Right	Thru	Left	Ped	Right	Thru	Left	Ped
7:00 AM	0	134	51	7	39	2	6	0	3	160	0	1	0	0	0	5
7:15 AM	0	172	44	6	53	0	8	2	10	238	0	1	0	0	0	1
7:30 AM	0	246	58	9	44	1	13	4	9	259	1	1	0	0	0	5
7:45 AM	**3**	**247**	**80**	**13**	**63**	**1**	**21**	**2**	**6**	**274**	**0**	**2**	**0**	**0**	**0**	**2**
8:00 AM	**6**	**219**	**85**	**20**	**56**	**2**	**14**	**4**	**11**	**232**	**0**	**4**	**2**	**0**	**0**	**2**
8:15 AM	**3**	**224**	**81**	**28**	**77**	**1**	**18**	**1**	**13**	**273**	**1**	**5**	**0**	**1**	**0**	**3**
8:30 AM	**7**	**216**	**114**	**48**	**79**	**4**	**21**	**4**	**10**	**222**	**0**	**6**	**0**	**2**	**0**	**2**
8:45 AM	7	208	95	71	67	4	15	8	15	260	0	6	1	0	1	10
9:00 AM	9	176	100	51	74	4	7	1	20	216	0	4	0	1	1	6
9:15 AM	6	184	104	40	43	3	12	1	13	250	0	1	1	0	0	13
9:30 AM	10	104	60	35	66	3	4	6	15	218	1	10	0	0	0	11
9:45 AM	11	134	50	51	46	2	9	5	13	169	2	3	1	0	1	8
10:00 AM	6	122	66	36	39	1	7	0	4	131	0	3	0	0	0	7
10:15 AM	6	141	57	25	43	1	8	6	14	145	0	3	2	0	0	6
10:30 AM	10	104	40	37	43	1	7	5	8	131	0	3	2	0	2	7
10:45 AM	3	106	41	35	37	1	3	1	13	160	2	6	2	0	0	4
11:00 AM	5	129	47	46	40	2	14	3	9	133	1	2	0	2	0	7
11:15 AM	9	141	83	58	56	1	8	1	8	144	1	1	2	0	3	9
11:30 AM	3	104	68	79	58	1	14	4	10	142	0	8	0	0	0	14
11:45 AM	4	144	77	72	63	2	10	3	13	134	0	11	2	0	4	11
12:00 PM	1	130	57	44	58	1	12	1	7	140	1	8	2	0	0	14
12:15 PM	1	145	50	31	60	2	11	1	6	159	0	18	1	0	2	9
12:30 PM	4	152	55	45	60	0	11	1	9	132	0	2	1	0	0	9
12:45 PM	6	120	65	58	58	1	12	3	9	124	0	6	3	0	2	10
1:00 PM	2	140	43	53	42	2	10	3	11	137	0	4	1	2	4	10
1:15 PM	3	132	52	42	48	1	6	0	6	140	1	5	2	0	0	4
1:30 PM	4	125	65	48	67	1	18	0	10	123	0	4	1	2	0	7
1:45 PM	4	145	70	59	60	1	14	4	14	151	2	8	2	1	4	7
4:00 PM	7	240	74	81	69	3	22	8	8	186	0	9	4	2	2	17
4:15 PM	6	214	63	65	72	0	21	5	7	189	2	3	7	1	2	5
4:30 PM	5	243	66	68	65	2	20	1	12	205	0	5	6	2	1	10
4:45 PM	6	264	83	77	69	3	24	3	13	160	0	1	7	0	7	8
5:00 PM	**6**	**257**	**78**	**152**	**88**	**2**	**36**	**6**	**17**	**177**	**0**	**17**	**3**	**3**	**1**	**27**
5:15 PM	**10**	**256**	**85**	**133**	**65**	**3**	**34**	**5**	**13**	**222**	**2**	**9**	**8**	**6**	**4**	**17**
5:30 PM	**6**	**247**	**81**	**67**	**77**	**3**	**22**	**4**	**10**	**195**	**0**	**8**	**5**	**0**	**2**	**17**
5:45 PM	**3**	**260**	**76**	**65**	**69**	**1**	**19**	**11**	**10**	**224**	**1**	**6**	**4**	**2**	**2**	**18**
6:00 PM	2	230	88	43	75	2	20	5	12	199	1	5	9	2	4	9
6:15 PM	2	257	86	49	60	2	9	6	6	141	1	11	2	0	1	6
6:30 PM	0	188	81	56	67	0	14	10	8	185	0	3	3	0	2	9
6:45 PM	1	177	74	59	61	2	18	3	7	164	0	5	3	0	1	8
AM Peak	12	936	304	70	240	5	66	11	39	1038	2	12	2	1	0	12
PM Peak	25	1020	320	417	299	9	111	26	50	818	3	40	20	11	9	79

Turning Movement Counts Data Sheet (Total)

Precision Systems, Inc.

Date: 2/27/2013 Location: Nebraska Ave and New Mexico Ave

Duration: 7AM~2PM; 4PM~7PM Recorder: Jianwei/Wengang

Turning Movement AM Peak Hour (7:45 AM ~ 8:45 AM)

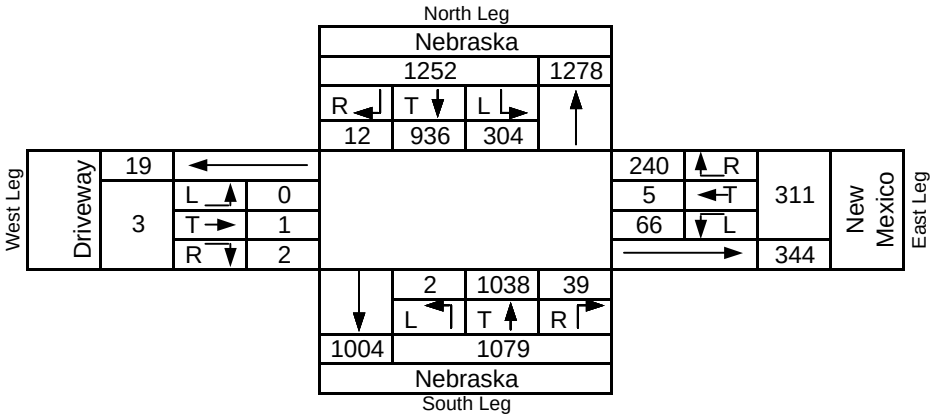

Turning Movement PM Peak Hour (5:00 PM ~ 6:00 PM)

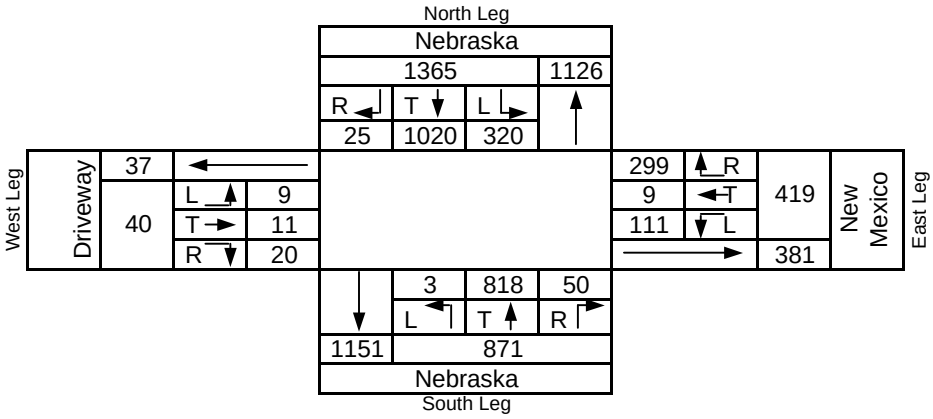

Turning Movement Counts Data Sheet (Car)

Precision Systems, Inc.

Date: 2/27/2013 Location: Nebraska Ave and New Mexico Ave

Duration: 7AM~2PM; 4PM~7PM Recorder: Jianwei/Wengang

Turning Movement Data - 15 Minutes Interval

Street	North Leg Nebraska				East Leg New Mexico				South Leg Nebraska				West Leg Driveway			
Start	Right	Thru	Left		Right	Thru	Left		Right	Thru	Left		Right	Thru	Left	
7:00 AM	0	126	49	7	38	2	6	0	3	155	0	1	0	0	0	5
7:15 AM	0	167	42	6	51	0	8	2	10	231	0	1	0	0	0	1
7:30 AM	0	233	55	9	43	1	13	4	9	255	1	1	0	0	0	5
7:45 AM	3	232	79	13	62	1	21	2	6	268	0	2	0	0	0	2
8:00 AM	6	209	83	20	56	2	14	4	11	227	0	4	2	0	0	2
8:15 AM	3	211	81	28	76	1	17	1	13	268	1	5	0	1	0	3
8:30 AM	7	209	109	48	79	4	21	4	9	214	0	6	0	2	0	2
8:45 AM	7	200	93	71	63	4	15	8	15	254	0	6	1	0	1	10
9:00 AM	9	162	94	51	74	4	7	1	20	211	0	4	0	1	1	6
9:15 AM	6	166	102	40	41	3	12	1	13	243	0	1	1	0	0	13
9:30 AM	10	97	58	35	63	3	3	6	14	202	1	10	0	0	0	11
9:45 AM	11	119	49	51	43	2	9	5	13	166	2	3	1	0	1	8
10:00 AM	6	111	65	36	36	1	7	0	4	122	0	3	0	0	0	7
10:15 AM	6	128	52	25	41	1	7	6	14	131	0	3	0	0	0	6
10:30 AM	10	95	38	37	43	1	7	5	8	125	0	3	2	0	2	7
10:45 AM	3	97	38	35	34	1	3	1	13	150	2	6	2	0	0	4
11:00 AM	5	129	46	46	38	2	13	3	8	119	1	2	0	2	0	7
11:15 AM	9	141	76	58	53	1	7	1	8	136	1	1	2	0	3	9
11:30 AM	3	104	68	79	57	1	14	4	10	138	0	8	0	0	0	14
11:45 AM	4	144	76	72	63	2	10	3	12	123	0	11	2	0	4	11
12:00 PM	1	130	57	44	56	1	12	1	7	134	1	8	2	0	0	14
12:15 PM	1	145	50	31	56	2	11	1	6	153	0	18	1	0	2	9
12:30 PM	4	152	53	45	59	0	11	1	9	124	0	2	1	0	0	9
12:45 PM	6	120	63	58	58	1	11	3	8	123	0	6	3	0	2	10
1:00 PM	2	140	43	53	40	2	9	3	11	129	0	4	1	2	4	10
1:15 PM	2	131	51	42	48	1	6	0	5	130	1	5	2	0	0	4
1:30 PM	4	125	65	48	66	1	17	0	10	119	0	4	1	2	0	7
1:45 PM	4	145	70	59	60	1	14	4	13	148	2	8	2	1	4	7
4:00 PM	7	233	73	81	67	3	22	8	8	182	0	9	4	2	2	17
4:15 PM	6	210	61	65	70	0	21	5	7	183	2	3	7	1	2	5
4:30 PM	5	235	66	68	62	2	20	1	12	196	0	5	6	2	1	10
4:45 PM	6	258	83	77	68	3	24	3	13	155	0	1	7	0	7	8
5:00 PM	6	251	77	152	85	2	36	6	17	174	0	17	3	3	1	27
5:15 PM	10	253	84	133	62	3	34	5	13	216	2	9	8	6	4	17
5:30 PM	6	243	80	67	76	3	22	4	10	188	0	8	5	0	2	17
5:45 PM	3	257	76	65	68	1	19	11	10	222	1	6	4	2	2	18
6:00 PM	2	226	86	43	74	2	20	5	12	199	1	5	9	2	4	9
6:15 PM	2	252	85	49	59	2	9	6	6	139	1	11	2	0	1	6
6:30 PM	0	185	80	56	66	0	14	10	8	182	0	3	3	0	2	9
6:45 PM	1	172	73	59	60	2	18	3	7	159	0	5	3	0	1	8
6:45 PM	0	0	0	0	0	0	0	0	0	0	0	0	0	0	0	0

Turning Movement Counts Data Sheet (Truck)

Precision Systems, Inc.

Date: 2/27/2013 Location: Nebraska Ave and New Mexico Ave

Duration: 7AM~2PM; 4PM~7PM Recorder: Jianwei/Wengang

Turning Movement Data - 15 Minutes Interval

Street	North Leg Nebraska				East Leg New Mexico				South Leg Nebraska				West Leg Driveway			
Start	Right	Thru	Left		Right	Thru	Left		Right	Thru	Left		Right	Thru	Left	
7:00 AM	0	8	2		1	0	0		0	5	0		0	0	0	
7:15 AM	0	5	2		2	0	0		0	7	0		0	0	0	
7:30 AM	0	13	3		1	0	0		0	4	0		0	0	0	
7:45 AM	0	15	1		1	0	0		0	6	0		0	0	0	
8:00 AM	0	10	2		0	0	0		0	5	0		0	0	0	
8:15 AM	0	13	0		1	0	1		0	5	0		0	0	0	
8:30 AM	0	7	5		0	0	0		1	8	0		0	0	0	
8:45 AM	0	8	2		4	0	0		0	6	0		0	0	0	
9:00 AM	0	14	6		0	0	0		0	5	0		0	0	0	
9:15 AM	0	18	2		2	0	0		0	7	0		0	0	0	
9:30 AM	0	7	2		3	0	1		1	16	0		0	0	0	
9:45 AM	0	15	1		3	0	0		0	3	0		0	0	0	
10:00 AM	0	11	1		3	0	0		0	9	0		0	0	0	
10:15 AM	0	13	5		2	0	1		0	14	0		2	0	0	
10:30 AM	0	9	2		0	0	0		0	6	0		0	0	0	
10:45 AM	0	9	3		3	0	0		0	10	0		0	0	0	
11:00 AM	0	0	1		2	0	1		1	14	0		0	0	0	
11:15 AM	0	0	7		3	0	1		0	8	0		0	0	0	
11:30 AM	0	0	0		1	0	0		0	4	0		0	0	0	
11:45 AM	0	0	1		0	0	0		1	11	0		0	0	0	
12:00 PM	0	0	0		2	0	0		0	6	0		0	0	0	
12:15 PM	0	0	0		4	0	0		0	6	0		0	0	0	
12:30 PM	0	0	2		1	0	0		0	8	0		0	0	0	
12:45 PM	0	0	2		0	0	1		1	1	0		0	0	0	
1:00 PM	0	0	0		2	0	1		0	8	0		0	0	0	
1:15 PM	1	1	1		0	0	0		1	10	0		0	0	0	
1:30 PM	0	0	0		1	0	1		0	4	0		0	0	0	
1:45 PM	0	0	0		0	0	0		1	3	0		0	0	0	
4:00 PM	0	7	1		2	0	0		0	4	0		0	0	0	
4:15 PM	0	4	2		2	0	0		0	6	0		0	0	0	
4:30 PM	0	8	0		3	0	0		0	9	0		0	0	0	
4:45 PM	0	6	0		1	0	0		0	5	0		0	0	0	
5:00 PM	0	6	1		3	0	0		0	3	0		0	0	0	
5:15 PM	0	3	1		3	0	0		0	6	0		0	0	0	
5:30 PM	0	4	1		1	0	0		0	7	0		0	0	0	
5:45 PM	0	3	0		1	0	0		0	2	0		0	0	0	
6:00 PM	0	4	2		1	0	0		0	0	0		0	0	0	
6:15 PM	0	5	1		1	0	0		0	2	0		0	0	0	
6:30 PM	0	3	1		1	0	0		0	3	0		0	0	0	
6:45 PM	0	5	1		1	0	0		0	5	0		0	0	0	

Turning Movement Counts Data Sheet (Bike)

Precision Systems, Inc.

Date: 2/27/2013 Location: Nebraska Ave and New Mexico Ave

Duration: 7AM~2PM; 4PM~7PM Recorder: Jianwei/Wengang

Turning Movement Data - 15 Minutes Interval

Street	North Leg Nebraska				East Leg New Mexico				South Leg Nebraska				West Leg Driveway			
Start	Right	Thru	Left		Right	Thru	Left		Right	Thru	Left		Right	Thru	Left	
7:00 AM	0	3	0		0	0	0		0	0	0		0	0	0	
7:15 AM	0	0	0		0	0	0		0	0	0		0	0	0	
7:30 AM	0	0	0		0	0	0		0	1	0		0	1	0	
7:45 AM	0	1	0		0	0	0		0	0	0		0	0	0	
8:00 AM	0	0	0		0	0	0		0	2	0		0	0	0	
8:15 AM	0	0	0		0	0	0		0	0	0		0	0	1	
8:30 AM	1	2	0		0	2	0		0	0	0		0	0	0	
8:45 AM	0	0	1		0	2	0		0	2	0		0	0	0	
9:00 AM	0	0	0		0	0	0		0	1	0		0	0	0	
9:15 AM	2	0	0		0	0	0		0	0	0		0	1	0	
9:30 AM	0	0	0		0	1	0		0	0	0		0	0	0	
9:45 AM	0	0	0		0	0	0		0	0	0		0	0	0	
10:00 AM	2	0	0		0	0	0		0	0	0		0	0	0	
10:15 AM	0	0	0		0	0	0		0	0	0		0	0	0	
10:30 AM	0	0	0		0	0	0		0	0	0		0	0	0	
10:45 AM	0	0	0		0	0	0		0	0	0		0	0	0	
11:00 AM	0	0	0		0	0	0		0	0	0		0	0	0	
11:15 AM	0	0	0		0	0	0		0	0	0		0	0	0	
11:30 AM	0	0	0		0	0	0		0	0	0		0	0	0	
11:45 AM	0	0	0		1	0	0		0	0	0		0	0	0	
12:00 PM	0	0	0		0	0	0		0	0	0		0	0	0	
12:15 PM	0	0	0		0	0	0		0	0	0		0	0	0	
12:30 PM	0	0	0		0	0	0		0	0	0		0	0	0	
12:45 PM	0	0	0		0	0	0		0	0	0		0	0	0	
1:00 PM	0	0	0		0	0	0		0	0	0		0	0	0	
1:15 PM	0	0	0		0	0	0		0	0	0		0	0	0	
1:30 PM	0	0	0		0	0	1		0	0	0		0	0	0	
1:45 PM	0	0	0		0	0	0		0	0	0		0	0	0	
4:00 PM	0	0	0		0	0	0		0	0	0		0	0	0	
4:15 PM	0	0	0		0	0	0		0	0	0		0	0	0	
4:30 PM	0	0	1		1	0	0		0	0	0		0	0	0	
4:45 PM	0	0	0		0	0	0		0	0	0		0	0	0	
5:00 PM	1	0	1		0	0	0		0	0	0		0	1	0	
5:15 PM	0	0	0		0	1	0		0	0	0		0	0	0	
5:30 PM	0	0	0		0	0	0		0	0	0		0	1	0	
5:45 PM	0	0	0		1	0	0		0	0	0		0	0	0	
6:00 PM	0	1	1		0	0	0		0	0	0		0	0	0	
6:15 PM	0	0	0		0	0	0		0	0	0		0	1	0	
6:30 PM	0	0	0		0	0	0		0	0	0		0	0	0	
6:45 PM	0	0	0		0	0	0		0	0	0		0	0	0	
6:45 PM	0	0	0		0	0	0		0	0	0		0	0	0	

Turning Movement Counts Data Sheet (Pedestrian)

Precision Systems, Inc.

Date: 2/27/2013 Location: Nebraska Ave and New Mexico Ave
Duration: 7AM~2PM; 4PM~7PM Recorder: Jianwei/Wengang

Turning Movement Data - 15 Minutes Interval

Street	North Crosswalk Nebraska	East Crosswalk New Mexico	South Crosswalk Nebraska	West Crosswalk Driveway
7:00 AM	7	0	1	5
7:15 AM	6	2	1	1
7:30 AM	9	4	1	5
7:45 AM	13	2	2	2
8:00 AM	20	4	4	2
8:15 AM	28	1	5	3
8:30 AM	48	4	6	2
8:45 AM	71	8	6	10
9:00 AM	51	1	4	6
9:15 AM	40	1	1	13
9:30 AM	35	6	10	11
9:45 AM	51	5	3	8
10:00 AM	36	0	3	7
10:15 AM	25	6	3	6
10:30 AM	37	5	3	7
10:45 AM	35	1	6	4
11:00 AM	46	3	2	7
11:15 AM	58	1	1	9
11:30 AM	79	4	8	14
11:45 AM	72	3	11	11
12:00 PM	44	1	8	14
12:15 PM	31	1	18	9
12:30 PM	45	1	2	9
12:45 PM	58	3	6	10
1:00 PM	53	3	4	10
1:15 PM	42	0	5	4
1:30 PM	48	0	4	7
12:00 AM	0	0	0	0
4:00 PM	81	8	9	17
4:15 PM	65	5	3	5
4:30 PM	68	1	5	10
4:45 PM	77	3	1	8
5:00 PM	152	6	17	27
5:15 PM	133	5	9	17
5:30 PM	67	4	8	17
5:45 PM	65	11	6	18
6:00 PM	43	5	5	9
6:15 PM	49	6	11	6
6:30 PM	56	10	3	9
6:45 PM	59	3	5	8

Turning Movement Counts Data Sheet (Total)

Precision Systems, Inc.

Date: 2/27/2013 Location: Nebraska Ave and DHS Ent/Exit
Duration: 7AM~8AM; 4PM~5PM Recorder: Jianwei/Wengang

Turning Movement Data - 15 Minutes Interval

Street	North Leg Nebraska				East Leg DHS Entrance/Exit				South Leg Nebraska				West Leg Driveway			
Start	Right	Thru	Left	Ped	Right	Thru	Left	Ped	Right	Thru	Left	Ped	Right	Thru	Left	Ped
7:00 AM	0	128	22	8	0	0	0	0	23	135	0	7	0	0	0	0
7:15 AM	0	168	10	21	0	0	0	0	18	226	0	11	0	0	1	0
7:30 AM	0	205	12	27	1	0	0	1	17	211	0	2	0	0	6	0
7:45 AM	0	202	11	20	0	0	0	0	16	206	0	3	0	0	1	0
4:00 PM	0	165	2	24	13	0	0	0	0	263	0	9	0	0	0	1
4:15 PM	0	159	2	37	7	0	0	1	0	253	0	37	0	0	0	0
4:30 PM	0	150	2	37	11	0	3	0	1	239	0	7	0	0	0	0
4:45 PM	1	213	2	4	11	0	3	0	1	244	1	37	2	0	0	1
AM Peak	0	703	55	76	1	0	0	1	74	778	0	23	0	0	8	0
PM Peak	1	687	8	102	42	0	6	1	2	999	1	90	2	0	0	2

Turning Movement AM Peak Hour (7:00 AM ~ 8:00 AM)

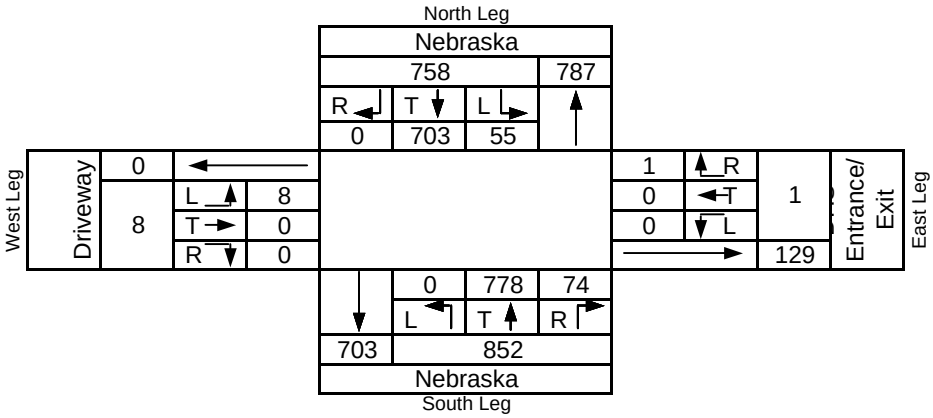

Turning Movement PM Peak Hour (4:00 PM ~ 5:00 PM)

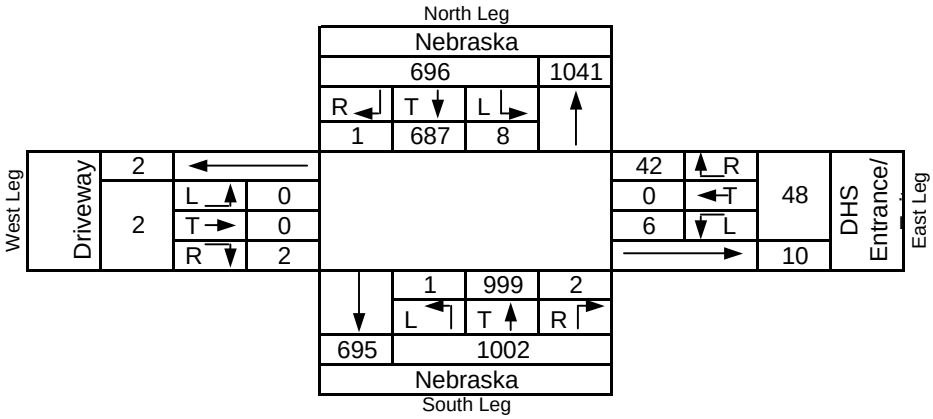

Turning Movement Counts Data Sheet (Total)

Precision Systems, Inc.

Date: 2/27/2013 Location: Nebraska Ave and American Univ Pkg Ent/Exit
Duration: 7AM~2PM; 4PM~7PM Recorder: Jianwei/Wengang

Turning Movement Data - 15 Minutes Interval

Street	North Leg Nebraska				East Leg Entranc Exit				South Leg Nebraska				West Leg N/A			
Start	Right	Thru	Left	Ped	Right	Thru	Left	Ped	Right	Thru	Left	Ped	Right	Thru	Left	Ped
7:00 AM	0	181	2	0	0	0	0	4	2	202	0	0	0	0	0	0
7:15 AM	0	215	0	0	2	0	0	7	1	288	0	0	0	0	0	0
7:30 AM	0	305	0	0	2	0	0	5	0	302	0	0	0	0	0	0
7:45 AM	**0**	**328**	**0**	**0**	**2**	**0**	**0**	**9**	**0**	**338**	**0**	**0**	**0**	**0**	**0**	**0**
8:00 AM	**0**	**307**	**0**	**1**	**5**	**0**	**0**	**8**	**0**	**282**	**0**	**0**	**0**	**0**	**0**	**0**
8:15 AM	**0**	**305**	**0**	**0**	**3**	**0**	**0**	**5**	**2**	**316**	**0**	**0**	**0**	**0**	**0**	**0**
8:30 AM	**0**	**317**	**0**	**0**	**8**	**0**	**0**	**10**	**2**	**328**	**0**	**0**	**0**	**0**	**0**	**0**
8:45 AM	0	304	0	0	6	0	0	7	2	310	0	0	0	0	0	0
9:00 AM	0	280	0	0	5	0	0	2	0	312	0	0	0	0	0	0
9:15 AM	0	277	0	2	1	0	0	6	0	296	0	0	0	0	0	0
9:30 AM	0	175	1	0	1	0	0	5	1	288	0	0	0	0	0	0
9:45 AM	0	200	0	0	3	0	0	6	1	218	0	0	0	0	0	0
10:00 AM	0	201	0	3	3	0	0	4	1	178	0	0	0	0	0	0
10:15 AM	0	191	1	1	7	0	0	7	0	198	0	1	0	0	0	0
10:30 AM	0	169	0	1	5	0	0	8	0	178	0	0	0	0	0	0
10:45 AM	0	197	1	0	1	0	0	6	5	211	0	0	0	0	0	0
11:00 AM	0	182	1	0	2	0	0	9	1	169	0	0	0	0	0	0
11:15 AM	0	218	0	0	9	0	0	6	2	200	0	0	0	0	0	0
11:30 AM	0	186	1	2	17	0	0	8	4	197	0	0	0	0	0	1
11:45 AM	0	238	2	1	6	0	0	12	0	204	0	0	0	0	0	0
12:00 PM	0	193	0	1	6	0	0	6	0	199	0	0	0	0	0	0
12:15 PM	0	209	0	2	5	0	0	3	1	222	0	1	0	0	0	0
12:30 PM	0	207	0	1	2	0	0	6	0	198	0	0	0	0	0	0
12:45 PM	0	199	2	1	7	0	0	6	1	183	0	0	0	0	0	0
1:00 PM	0	191	1	1	5	0	0	9	2	179	0	2	0	0	0	0
1:15 PM	0	193	0	1	3	0	0	6	2	188	0	0	0	0	0	0
1:30 PM	0	196	0	1	5	0	0	8	2	192	0	2	0	0	0	2
1:45 PM	0	218	0	3	10	0	0	4	1	214	0	0	0	0	0	3
4:00 PM	0	323	1	0	16	0	0	12	0	258	0	0	0	0	0	1
4:15 PM	0	289	0	1	10	0	0	14	1	266	0	0	0	0	0	0
4:30 PM	0	306	0	0	13	0	1	2	4	254	0	0	0	0	0	1
4:45 PM	0	354	2	0	14	0	0	11	2	248	0	0	0	0	0	1
5:00 PM	**0**	**353**	**1**	**1**	**34**	**0**	**0**	**21**	**3**	**263**	**0**	**2**	**0**	**0**	**0**	**7**
5:15 PM	**0**	**351**	**1**	**5**	**25**	**0**	**0**	**16**	**1**	**283**	**0**	**0**	**0**	**0**	**0**	**1**
5:30 PM	**0**	**324**	**1**	**0**	**17**	**0**	**0**	**13**	**1**	**283**	**0**	**0**	**0**	**0**	**0**	**2**
5:45 PM	**0**	**337**	**0**	**0**	**14**	**0**	**0**	**10**	**1**	**290**	**0**	**0**	**0**	**0**	**0**	**0**
6:00 PM	0	319	1	0	13	0	0	12	0	278	0	0	0	0	0	0
6:15 PM	0	353	0	1	11	0	0	7	0	203	0	0	0	0	0	0
6:30 PM	0	257	0	6	11	0	0	17	0	245	0	0	0	0	0	0
6:45 PM	0	247	0	2	16	0	0	13	0	227	0	0	0	0	0	0
AM Peak	0	1245	0	1	12	0	0	27	2	1238	0	0	0	0	0	0
PM Peak	0	1365	3	6	90	0	0	60	6	1119	0	2	0	0	0	10

Turning Movement Counts Data Sheet (Total)

Precision Systems, Inc.

Date: 2/27/2013 Location: Nebraska Ave and American Univ Pkg Ent/Exit

Duration: 7AM~2PM; 4PM~7PM Recorder: Jianwei/Wengang

Turning Movement AM Peak Hour (7:45 AM ~ 8:45 AM)

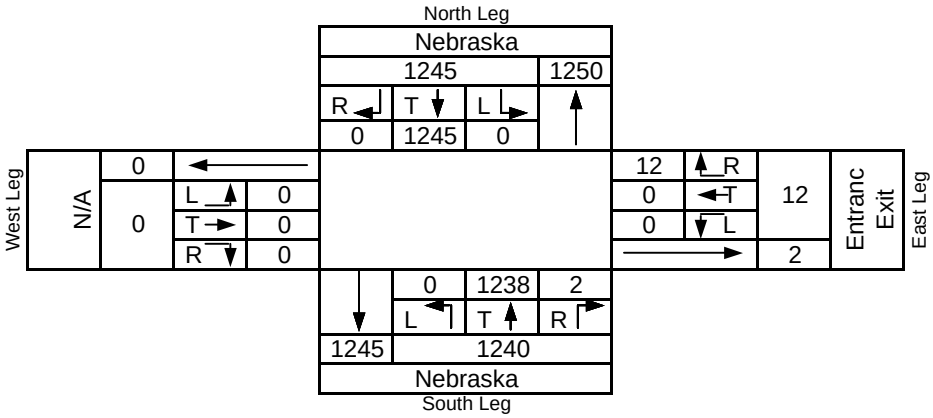

Turning Movement PM Peak Hour (5:00 PM ~ 6:00 PM)

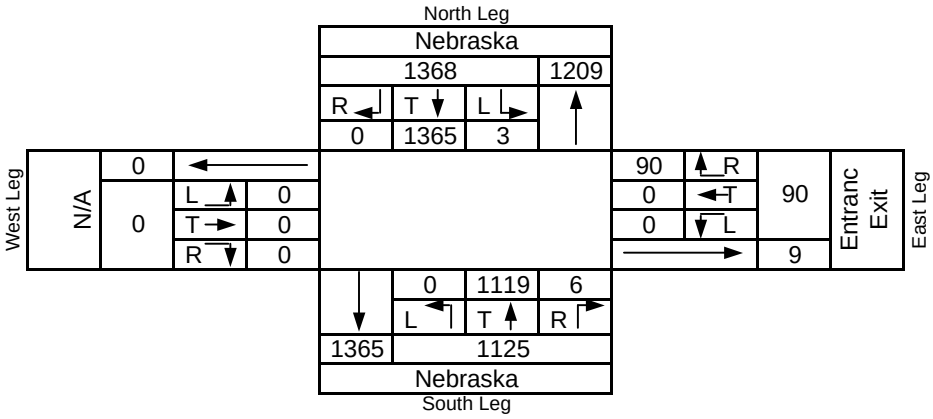

Turning Movement Counts Data Sheet (Car)

Precision Systems, Inc.

Date: 2/27/2013 Location: Nebraska Ave and American Univ Pkg Ent/Exit

Duration: 7AM~2PM; 4PM~7PM Recorder: Jianwei/Wengang

Turning Movement Data - 15 Minutes Interval

Street	North Leg Nebraska				East Leg Entranc Exit				South Leg Nebraska				West Leg N/A			
Start	Right	Thru	Left		Right	Thru	Left		Right	Thru	Left		Right	Thru	Left	
7:00 AM	0	171	2	0	0	0	0	4	2	196	0	0	0	0	0	0
7:15 AM	0	208	0	0	2	0	0	7	1	279	0	0	0	0	0	0
7:30 AM	0	289	0	0	2	0	0	5	0	295	0	0	0	0	0	0
7:45 AM	0	314	0	0	2	0	0	9	0	330	0	0	0	0	0	0
8:00 AM	0	296	0	1	5	0	0	8	0	277	0	0	0	0	0	0
8:15 AM	0	293	0	0	3	0	0	5	2	310	0	0	0	0	0	0
8:30 AM	0	308	0	0	8	0	0	10	2	319	0	0	0	0	0	0
8:45 AM	0	297	0	0	6	0	0	7	2	300	0	0	0	0	0	0
9:00 AM	0	261	0	0	5	0	0	2	0	305	0	0	0	0	0	0
9:15 AM	0	260	0	2	1	0	0	6	0	288	0	0	0	0	0	0
9:30 AM	0	166	1	0	1	0	0	5	1	269	0	0	0	0	0	0
9:45 AM	0	187	0	0	3	0	0	6	1	213	0	0	0	0	0	0
10:00 AM	0	187	0	3	3	0	0	4	1	169	0	0	0	0	0	0
10:15 AM	0	177	1	1	7	0	0	7	0	185	0	1	0	0	0	0
10:30 AM	0	159	0	1	5	0	0	8	0	171	0	0	0	0	0	0
10:45 AM	0	178	1	0	1	0	0	6	4	198	0	0	0	0	0	0
11:00 AM	0	182	1	0	1	0	0	9	1	155	0	0	0	0	0	0
11:15 AM	0	218	0	0	9	0	0	6	2	189	0	0	0	0	0	0
11:30 AM	0	186	1	2	17	0	0	8	4	191	0	0	0	0	0	1
11:45 AM	0	238	2	1	6	0	0	12	0	194	0	0	0	0	0	0
12:00 PM	0	193	0	1	6	0	0	6	0	191	0	0	0	0	0	0
12:15 PM	0	209	0	2	5	0	0	3	1	212	0	1	0	0	0	0
12:30 PM	0	207	0	1	2	0	0	6	0	190	0	0	0	0	0	0
12:45 PM	0	199	2	1	7	0	0	6	1	182	0	0	0	0	0	0
1:00 PM	0	191	1	1	5	0	0	9	2	170	0	2	0	0	0	0
1:15 PM	0	193	0	1	3	0	0	6	2	180	0	0	0	0	0	0
1:30 PM	0	196	0	1	5	0	0	8	2	188	0	2	0	0	0	2
1:45 PM	0	218	0	3	10	0	0	4	1	212	0	0	0	0	0	3
4:00 PM	0	315	1	0	16	0	0	12	0	252	0	0	0	0	0	1
4:15 PM	0	283	0	1	10	0	0	14	1	259	0	0	0	0	0	0
4:30 PM	0	299	0	0	13	0	1	2	4	242	0	0	0	0	0	1
4:45 PM	0	346	2	0	14	0	0	11	2	242	0	0	0	0	0	1
5:00 PM	0	348	1	1	34	0	0	21	3	257	0	2	0	0	0	7
5:15 PM	0	347	1	5	25	0	0	16	1	273	0	0	0	0	0	1
5:30 PM	0	319	1	0	17	0	0	13	1	275	0	0	0	0	0	2
5:45 PM	0	334	0	0	14	0	0	10	1	286	0	0	0	0	0	0
6:00 PM	0	313	1	0	13	0	0	12	0	277	0	0	0	0	0	0
6:15 PM	0	347	0	1	11	0	0	7	0	200	0	0	0	0	0	0
6:30 PM	0	257	0	6	11	0	0	17	0	245	0	0	0	0	0	0
6:45 PM	0	247	0	2	16	0	0	13	0	227	0	0	0	0	0	0
6:45 PM	0	0	0	0	0	0	0	0	0	0	0	0	0	0	0	0

Turning Movement Counts Data Sheet (Truck)

Precision Systems, Inc.

Date: 2/27/2013 Location: Nebraska Ave and American Univ Pkg Ent/Exit

Duration: 7AM~2PM; 4PM~7PM Recorder: Jianwei/Wengang

Turning Movement Data - 15 Minutes Interval

Street	North Leg Nebraska				East Leg Entranc Exit				South Leg Nebraska				West Leg N/A			
Start	Right	Thru	Left		Right	Thru	Left		Right	Thru	Left		Right	Thru	Left	
7:00 AM	0	10	0		0	0	0		0	6	0		0	0	0	
7:15 AM	0	7	0		0	0	0		0	9	0		0	0	0	
7:30 AM	0	16	0		0	0	0		0	7	0		0	0	0	
7:45 AM	0	14	0		0	0	0		0	8	0		0	0	0	
8:00 AM	0	11	0		0	0	0		0	5	0		0	0	0	
8:15 AM	0	12	0		0	0	0		0	6	0		0	0	0	
8:30 AM	0	9	0		0	0	0		0	9	0		0	0	0	
8:45 AM	0	7	0		0	0	0		0	10	0		0	0	0	
9:00 AM	0	19	0		0	0	0		0	7	0		0	0	0	
9:15 AM	0	17	0		0	0	0		0	8	0		0	0	0	
9:30 AM	0	9	0		0	0	0		0	19	0		0	0	0	
9:45 AM	0	13	0		0	0	0		0	5	0		0	0	0	
10:00 AM	0	14	0		0	0	0		0	9	0		0	0	0	
10:15 AM	0	14	0		0	0	0		0	13	0		0	0	0	
10:30 AM	0	10	0		0	0	0		0	7	0		0	0	0	
10:45 AM	0	19	0		0	0	0		1	13	0		0	0	0	
11:00 AM	0	0	0		1	0	0		0	14	0		0	0	0	
11:15 AM	0	0	0		0	0	0		0	11	0		0	0	0	
11:30 AM	0	0	0		0	0	0		0	6	0		0	0	0	
11:45 AM	0	0	0		0	0	0		0	10	0		0	0	0	
12:00 PM	0	0	0		0	0	0		0	8	0		0	0	0	
12:15 PM	0	0	0		0	0	0		0	10	0		0	0	0	
12:30 PM	0	0	0		0	0	0		0	8	0		0	0	0	
12:45 PM	0	0	0		0	0	0		0	1	0		0	0	0	
1:00 PM	0	0	0		0	0	0		0	9	0		0	0	0	
1:15 PM	0	0	0		0	0	0		0	8	0		0	0	0	
1:30 PM	0	0	0		0	0	0		0	4	0		0	0	0	
1:45 PM	0	0	0		0	0	0		0	2	0		0	0	0	
4:00 PM	0	8	0		0	0	0		0	6	0		0	0	0	
4:15 PM	0	6	0		0	0	0		0	7	0		0	0	0	
4:30 PM	0	7	0		0	0	0		0	12	0		0	0	0	
4:45 PM	0	8	0		0	0	0		0	6	0		0	0	0	
5:00 PM	0	5	0		0	0	0		0	6	0		0	0	0	
5:15 PM	0	4	0		0	0	0		0	10	0		0	0	0	
5:30 PM	0	5	0		0	0	0		0	8	0		0	0	0	
5:45 PM	0	3	0		0	0	0		0	4	0		0	0	0	
6:00 PM	0	6	0		0	0	0		0	1	0		0	0	0	
6:15 PM	0	6	0		0	0	0		0	3	0		0	0	0	
6:30 PM	0	0	0		0	0	0		0	0	0		0	0	0	
6:45 PM	0	0	0		0	0	0		0	0	0		0	0	0	

Turning Movement Counts Data Sheet (Bike)

Precision Systems, Inc.

Date: 2/27/2013 Location: Nebraska Ave and American Univ Pkg Ent/Exit

Duration: 7AM~2PM; 4PM~7PM Recorder: Jianwei/Wengang

Turning Movement Data - 15 Minutes Interval

Street	North Leg Nebraska				East Leg Entranc Exit				South Leg Nebraska				West Leg N/A			
Start	Right	Thru	Left		Right	Thru	Left		Right	Thru	Left		Right	Thru	Left	
7:00 AM	0	0	0		0	0	0		0	0	0		0	0	0	
7:15 AM	0	0	0		0	0	0		0	0	0		0	0	0	
7:30 AM	0	0	0		0	0	0		0	0	0		0	0	0	
7:45 AM	0	0	0		0	0	0		0	0	0		0	0	0	
8:00 AM	0	0	0		0	0	0		0	1	0		0	0	0	
8:15 AM	0	0	0		0	0	0		0	1	0		0	0	0	
8:30 AM	0	0	0		0	0	0		0	0	0		0	0	0	
8:45 AM	0	1	0		0	0	0		0	0	0		0	0	0	
9:00 AM	0	0	0		0	0	0		0	2	0		0	0	0	
9:15 AM	0	0	0		0	0	0		0	1	0		0	0	0	
9:30 AM	0	0	0		0	0	0		0	1	0		0	0	0	
9:45 AM	0	0	0		0	0	0		0	0	0		0	0	0	
10:00 AM	0	1	0		0	0	0		0	0	0		0	0	0	
10:15 AM	0	0	0		0	0	0		0	0	0		0	0	0	
10:30 AM	0	0	0		0	0	0		0	0	0		0	0	0	
10:45 AM	0	1	0		0	0	0		0	0	0		0	0	0	
11:00 AM	0	0	0		0	0	0		0	1	0		0	0	0	
11:15 AM	0	0	0		0	0	0		0	0	0		0	0	0	
11:30 AM	0	0	0		0	0	0		0	0	0		0	0	0	
11:45 AM	0	0	0		0	0	0		0	0	0		0	0	0	
12:00 PM	0	0	0		0	0	0		0	0	0		0	0	0	
12:15 PM	0	0	0		0	0	0		0	0	0		0	0	0	
12:30 PM	0	0	0		0	0	0		0	0	0		0	0	0	
12:45 PM	0	0	0		0	0	0		0	0	0		0	0	0	
1:00 PM	0	0	0		0	0	0		0	1	0		0	0	0	
1:15 PM	0	0	0		0	0	0		0	0	0		0	0	0	
1:30 PM	0	0	0		0	0	0		0	0	0		0	0	0	
1:45 PM	0	0	0		0	0	0		0	4	0		0	0	0	
4:00 PM	0	0	0		0	0	0		0	0	0		0	0	0	
4:15 PM	0	0	0		0	0	0		0	0	0		0	0	0	
4:30 PM	0	1	0		0	0	0		0	1	0		0	0	0	
4:45 PM	0	1	0		0	0	0		0	0	0		0	0	0	
5:00 PM	0	2	0		0	0	0		0	0	0		0	0	0	
5:15 PM	0	0	0		0	0	0		0	0	0		0	0	0	
5:30 PM	0	0	0		0	0	0		0	0	0		0	0	0	
5:45 PM	0	0	0		0	0	0		0	0	0		0	0	0	
6:00 PM	0	2	0		0	0	0		0	0	0		0	0	0	
6:15 PM	0	0	0		0	0	0		0	1	0		0	0	0	
6:30 PM	0	0	0		0	0	0		0	0	0		0	0	0	
6:45 PM	0	0	0		0	0	0		0	0	0		0	0	0	
6:45 PM	0	0	0		0	0	0		0	0	0		0	0	0	

Turning Movement Counts Data Sheet (Pedestrian)

Precision Systems, Inc.

Date: 2/27/2013 Location: Nebraska Ave and American Univ Pkg Ent/Exit
Duration: 7AM~2PM; 4PM~7PM Recorder: Jianwei/Wengang

Turning Movement Data - 15 Minutes Interval

Street	North Crosswalk Nebraska	East Crosswalk Entranc Exit	South Crosswalk Nebraska	West Crosswalk N/A
7:00 AM	0	4	0	0
7:15 AM	0	7	0	0
7:30 AM	0	5	0	0
7:45 AM	0	9	0	0
8:00 AM	1	8	0	0
8:15 AM	0	5	0	0
8:30 AM	0	10	0	0
8:45 AM	0	7	0	0
9:00 AM	0	2	0	0
9:15 AM	2	6	0	0
9:30 AM	0	5	0	0
9:45 AM	0	6	0	0
10:00 AM	3	4	0	0
10:15 AM	1	7	1	0
10:30 AM	1	8	0	0
10:45 AM	0	6	0	0
11:00 AM	0	9	0	0
11:15 AM	0	6	0	0
11:30 AM	2	8	0	1
11:45 AM	1	12	0	0
12:00 PM	1	6	0	0
12:15 PM	2	3	1	0
12:30 PM	1	6	0	0
12:45 PM	1	6	0	0
1:00 PM	1	9	2	0
1:15 PM	1	6	0	0
1:30 PM	1	8	2	2
12:00 AM	0	0	0	0
4:00 PM	0	12	0	1
4:15 PM	1	14	0	0
4:30 PM	0	2	0	1
4:45 PM	0	11	0	1
5:00 PM	1	21	2	7
5:15 PM	5	16	0	1
5:30 PM	0	13	0	2
5:45 PM	0	10	0	0
6:00 PM	0	12	0	0
6:15 PM	1	7	0	0
6:30 PM	6	17	0	0
6:45 PM	2	13	0	0

Turning Movement Counts Data Sheet (Total)

Precision Systems, Inc.

Date: 2/27/2013 Location: Massachusetts Ave and DHS Ent/Exit
Duration: 7AM~8AM; 4PM~5PM Recorder: Jianwei/Wengang

Turning Movement Data - 15 Minutes Interval

Street	North Leg DHS Entrance/Eixt				East Leg Massachusetts Ave				South Leg N/A				West Leg Massachusetts Ave			
Start	Right	Thru	Left	Ped	Right	Thru	Left	Ped	Right	Thru	Left	Ped	Right	Thru	Left	Ped
7:00 AM	3	0	6	6	11	86	0	0	0	0	0	0	0	203	14	0
7:15 AM	3	0	3	9	11	117	0	0	0	0	0	5	0	323	6	0
7:30 AM	1	0	1	18	21	137	0	0	0	0	0	0	0	407	5	0
7:45 AM	3	0	1	20	8	186	0	0	0	0	0	0	0	375	4	0
4:00 PM	30	0	15	39	3	231	0	0	0	0	0	0	0	122	1	0
4:15 PM	26	0	6	75	3	248	0	0	0	0	0	0	0	164	2	0
4:30 PM	26	0	12	54	0	253	0	0	0	0	0	0	0	145	1	0
4:45 PM	26	0	4	48	1	248	0	0	0	0	0	0	0	150	0	0
AM Peak	10	0	11	53	51	526	0	0	0	0	0	5	0	1308	29	0
PM Peak	108	0	37	216	7	980	0	0	0	0	0	0	0	581	4	0

Turning Movement AM Peak Hour (7:00 AM ~ 8:00 AM)

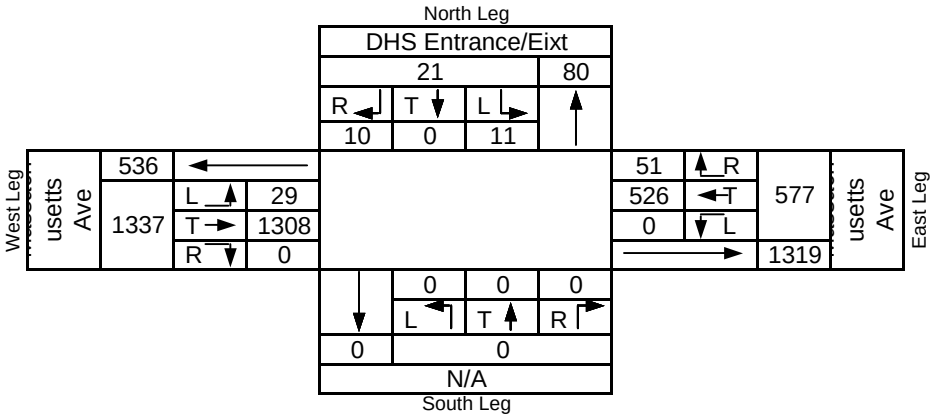

Turning Movement PM Peak Hour (4:00 PM ~ 5:00 PM)

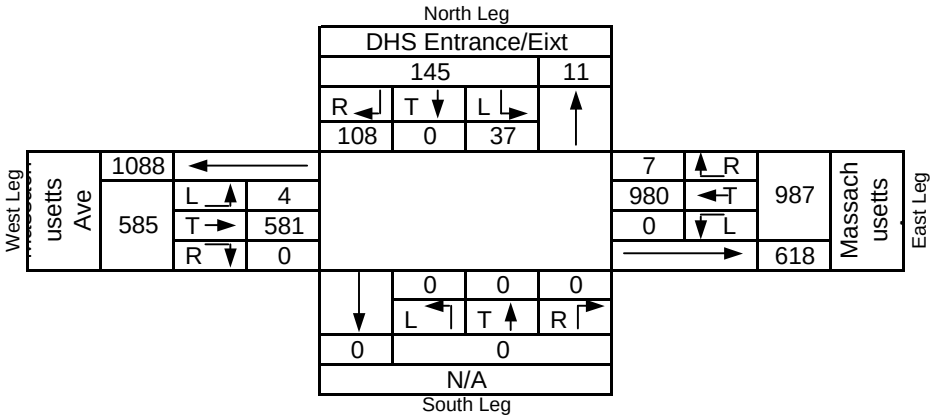

Turning Movement Counts Data Sheet (Total)

Precision Systems, Inc.

Date: 2/27/2013 Location: 4201 Massachusetts Ave
Duration: 7AM~8AM; 4PM~5PM Recorder: Jianwei/Wengang

Turning Movement Data - 15 Minutes Interval

Street	North Leg APT Entrance/Eixt				East Leg Massachusetts Ave				South Leg N/A				West Leg Massachusetts Ave			
Start	Right	Thru	Left	Ped	Right	Thru	Left	Ped	Right	Thru	Left	Ped	Right	Thru	Left	Ped
7:00 AM	3	0	3	4	0	94	0	0	0	0	0	1	0	215	0	4
7:15 AM	2	0	5	9	0	133	0	1	0	0	0	5	0	330	0	14
7:30 AM	3	0	2	6	0	148	0	1	0	0	0	15	0	423	0	7
7:45 AM	3	0	4	6	0	203	0	1	0	0	0	25	0	379	0	13
4:00 PM	9	0	8	17	0	229	0	0	0	0	0	27	0	140	0	12
4:15 PM	2	0	8	42	0	235	0	0	0	0	0	17	0	173	0	7
4:30 PM	5	0	3	16	0	247	0	0	0	0	0	21	0	160	0	7
4:45 PM	2	0	4	9	0	260	0	0	0	0	0	25	0	140	0	8
AM Peak	11	0	14	25	0	578	0	3	0	0	0	46	0	1347	0	38
PM Peak	18	0	23	84	0	971	0	0	0	0	0	90	0	613	0	34

Turning Movement AM Peak Hour (7:00 AM ~ 8:00 AM)

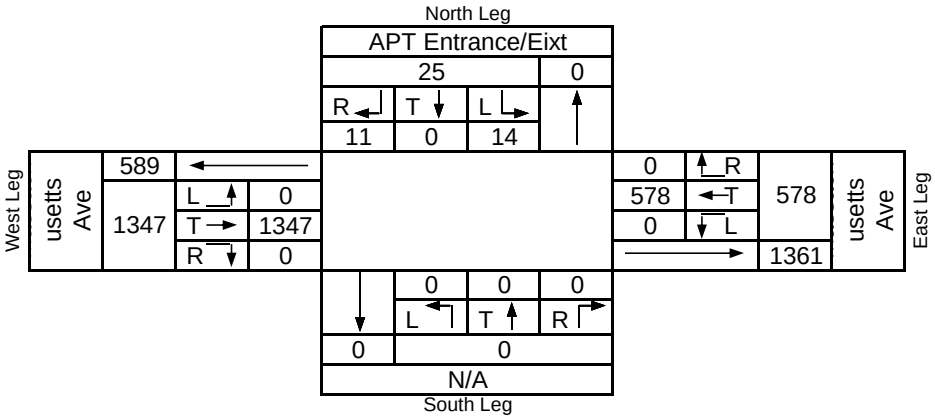

Turning Movement PM Peak Hour (4:00 PM ~ 5:00 PM)

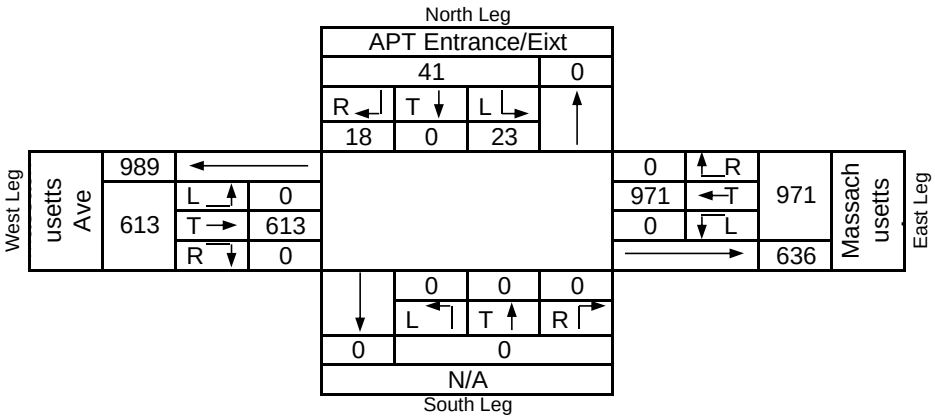

Turning Movement Counts Data Sheet (Total)

Precision Systems, Inc.

Date: 2/27/2013 Location: Nebraska Ave and Van Ness St NW

Duration: 7AM~2PM; 4PM~7PM Recorder: Jianwei/Wengang

Turning Movement Data - 15 Minutes Interval

Street	North Leg Nebraska				East Leg Vanness				South Leg Nebraska				West Leg Vanness			
Start	Right	Thru	Left	Ped	Right	Thru	Left	Ped	Right	Thru	Left	Ped	Right	Thru	Left	Ped
7:00 AM	1	119	0	1	0	5	16	9	34	71	0	3	0	24	0	7
7:15 AM	5	141	0	1	0	7	27	9	66	121	0	2	1	49	1	5
7:30 AM	4	191	0	3	2	27	25	7	63	114	2	4	1	86	2	7
7:45 AM	1	184	1	2	1	32	22	2	75	110	1	4	0	93	1	6
8:00 AM	2	162	0	5	0	52	33	11	82	117	3	11	0	62	1	8
8:15 AM	**5**	**174**	**0**	**1**	**0**	**45**	**32**	**6**	**98**	**118**	**1**	**8**	**1**	**79**	**5**	**11**
8:30 AM	**6**	**170**	**0**	**2**	**0**	**39**	**25**	**11**	**102**	**144**	**1**	**8**	**0**	**83**	**1**	**12**
8:45 AM	**7**	**159**	**2**	**2**	**0**	**35**	**26**	**10**	**80**	**121**	**5**	**6**	**1**	**94**	**3**	**14**
9:00 AM	**7**	**182**	**1**	**5**	**2**	**37**	**31**	**5**	**109**	**111**	**0**	**8**	**0**	**85**	**3**	**13**
9:15 AM	5	139	1	1	0	19	24	4	101	112	1	7	1	78	3	10
9:30 AM	3	100	1	3	0	25	26	9	92	124	2	2	1	59	3	6
9:45 AM	3	114	3	1	0	27	29	4	64	105	2	5	1	41	6	6
10:00 AM	4	85	1	0	1	18	32	8	36	72	2	6	3	37	4	7
10:15 AM	3	106	2	3	1	20	27	3	37	99	2	4	1	22	2	4
10:30 AM	3	84	1	2	2	25	27	0	48	89	0	5	1	22	3	6
10:45 AM	1	95	0	1	0	20	41	0	39	86	0	4	1	28	2	8
11:00 AM	6	82	0	1	2	18	37	1	22	92	2	2	4	26	2	10
11:15 AM	6	101	0	0	0	17	23	4	28	95	0	3	2	23	2	11
11:30 AM	9	96	0	2	2	22	27	4	33	91	0	4	2	21	3	10
11:45 AM	4	111	0	1	0	21	49	4	44	97	0	4	2	22	2	14
12:00 PM	4	80	1	0	0	18	28	6	35	114	1	1	1	24	4	13
12:15 PM	1	87	1	0	0	19	33	5	38	131	2	1	1	14	4	9
12:30 PM	2	104	0	2	0	17	32	13	30	120	1	10	1	22	3	13
12:45 PM	7	82	1	3	1	26	40	7	34	96	2	4	0	16	4	12
1:00 PM	6	107	0	4	3	34	29	8	33	92	1	5	0	21	0	11
1:15 PM	3	97	0	2	2	23	33	6	34	84	2	6	1	28	2	16
1:30 PM	4	94	0	3	0	19	33	6	44	96	0	5	0	20	4	15
1:45 PM	2	108	1	2	0	22	39	9	35	111	1	5	1	19	2	21
4:00 PM	4	123	0	3	0	48	74	12	51	170	0	5	3	35	1	18
4:15 PM	3	103	3	6	0	64	68	13	42	187	0	2	1	37	6	17
4:30 PM	2	106	0	8	0	70	69	17	42	153	0	4	0	24	5	17
4:45 PM	5	121	0	3	0	46	70	10	27	162	0	9	1	24	3	37
5:00 PM	**4**	**137**	**0**	**9**	**2**	**78**	**66**	**15**	**39**	**202**	**2**	**6**	**1**	**31**	**4**	**26**
5:15 PM	**5**	**146**	**2**	**2**	**1**	**74**	**77**	**23**	**28**	**193**	**4**	**8**	**1**	**33**	**1**	**35**
5:30 PM	**9**	**124**	**1**	**9**	**1**	**81**	**69**	**20**	**42**	**187**	**2**	**6**	**2**	**35**	**6**	**28**
5:45 PM	**9**	**148**	**3**	**3**	**1**	**92**	**59**	**20**	**41**	**175**	**1**	**8**	**1**	**47**	**7**	**16**
6:00 PM	3	105	0	4	2	94	56	16	41	176	1	2	3	44	9	12
6:15 PM	5	142	2	1	1	66	71	17	27	140	3	5	1	38	4	19
6:30 PM	8	95	1	1	0	83	59	8	27	131	2	8	2	29	2	15
6:45 PM	7	126	3	3	1	51	65	10	38	139	0	2	0	35	3	19
AM Peak	12	711	1	11	3	156	112	26	318	459	7	27	2	320	9	32
PM Peak	27	555	6	23	5	325	271	78	150	757	9	28	5	146	18	105

Turning Movement Counts Data Sheet (Total)

Precision Systems, Inc.

Date: 2/27/2013 Location: Nebraska Ave and Van Ness St NW

Duration: 7AM~2PM; 4PM~7PM Recorder: Jianwei/Wengang

Turning Movement AM Peak Hour (8:15 AM ~ 9:15 AM)

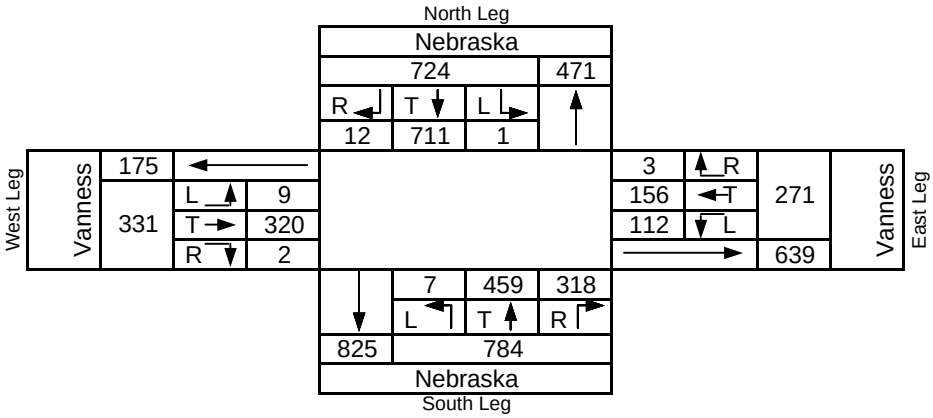

Turning Movement PM Peak Hour (5:00 PM ~ 6:00 PM)

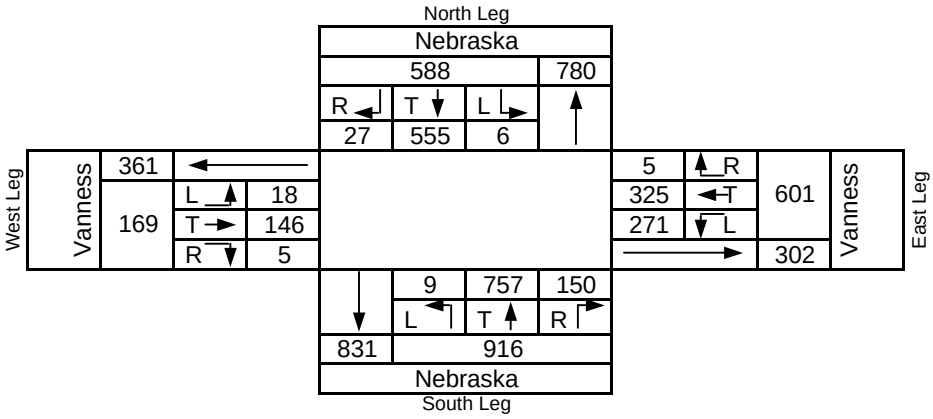

Turning Movement Counts Data Sheet (Car)

Precision Systems, Inc.

Date: 2/27/2013 Location: Nebraska Ave and Van Ness St NW

Duration: 7AM~2PM; 4PM~7PM Recorder: Jianwei/Wengang

Turning Movement Data - 15 Minutes Interval

Street	North Leg Nebraska				East Leg Vanness				South Leg Nebraska				West Leg Vanness			
Start	Right	Thru	Left		Right	Thru	Left		Right	Thru	Left		Right	Thru	Left	
7:00 AM	1	112	0	1	0	5	15	9	34	67	0	3	0	24	0	7
7:15 AM	3	128	0	1	0	7	27	9	64	111	0	2	1	48	1	5
7:30 AM	3	175	0	3	2	27	25	7	62	108	2	4	1	86	2	7
7:45 AM	1	176	1	2	1	32	22	2	74	102	1	4	0	93	1	6
8:00 AM	2	151	0	5	0	52	33	11	81	111	3	11	0	62	0	8
8:15 AM	5	156	0	1	0	45	31	6	98	107	1	8	1	79	5	11
8:30 AM	6	160	0	2	0	39	25	11	99	134	1	8	0	83	1	12
8:45 AM	7	143	2	2	0	35	25	10	79	109	5	6	1	94	3	14
9:00 AM	7	160	1	5	2	35	31	5	109	103	0	8	0	85	3	13
9:15 AM	5	125	1	1	0	19	21	4	100	101	1	7	1	78	3	10
9:30 AM	3	90	1	3	0	24	24	9	86	109	2	2	1	59	3	6
9:45 AM	3	99	3	1	0	27	27	4	62	95	2	5	1	41	5	6
10:00 AM	4	75	0	0	1	18	30	8	35	61	1	6	3	37	3	7
10:15 AM	3	98	2	3	1	20	25	3	36	86	2	4	1	22	1	4
10:30 AM	3	73	1	2	2	23	27	0	47	77	0	5	1	21	3	6
10:45 AM	1	81	0	1	0	20	38	0	39	75	0	4	1	28	2	8
11:00 AM	6	82	0	1	2	18	37	1	22	79	2	2	3	26	2	10
11:15 AM	6	101	0	0	0	16	21	4	28	83	0	3	2	23	2	11
11:30 AM	9	96	0	2	2	22	27	4	31	80	0	4	2	21	3	10
11:45 AM	3	110	0	1	0	20	47	4	42	83	0	4	2	21	2	14
12:00 PM	4	80	1	0	0	18	27	6	34	103	1	1	1	24	4	13
12:15 PM	1	87	1	0	0	19	32	5	38	120	2	1	1	14	4	9
12:30 PM	2	104	0	2	0	17	31	13	28	104	1	10	1	22	3	13
12:45 PM	7	82	1	3	1	26	38	7	33	92	2	4	0	16	4	12
1:00 PM	6	107	0	4	3	33	28	8	33	83	1	5	0	21	0	11
1:15 PM	2	96	0	2	2	23	33	6	34	75	2	6	1	27	2	16
1:30 PM	4	94	0	3	0	19	31	6	43	88	0	5	0	20	4	15
1:45 PM	2	108	1	2	0	21	38	9	34	102	1	5	1	19	2	21
4:00 PM	4	117	0	3	0	46	72	12	50	160	0	5	3	35	1	18
4:15 PM	3	95	3	6	0	64	68	13	42	180	0	2	1	37	6	17
4:30 PM	2	99	0	8	0	70	69	17	41	143	0	4	0	24	4	17
4:45 PM	5	111	0	3	0	46	70	10	27	154	0	9	1	24	3	37
5:00 PM	4	129	0	9	2	78	66	15	37	192	2	6	1	31	4	26
5:15 PM	5	141	2	2	1	74	77	23	28	185	3	8	1	33	1	35
5:30 PM	9	117	1	9	1	81	69	20	41	174	2	6	2	35	6	28
5:45 PM	9	142	3	3	1	92	59	20	41	170	1	8	1	46	7	16
6:00 PM	3	100	0	4	2	93	56	16	41	169	1	2	3	43	9	12
6:15 PM	5	133	2	1	1	66	71	17	27	133	3	5	1	38	4	19
6:30 PM	8	90	1	1	0	83	58	8	27	124	2	8	2	29	2	15
6:45 PM	7	118	3	3	1	51	65	10	38	132	0	2	0	35	3	19
6:45 PM	0	0	0	0	0	0	0	0	0	0	0	0	0	0	0	0

Turning Movement Counts Data Sheet (Truck)

Precision Systems, Inc.

Date: 2/27/2013 Location: Nebraska Ave and Van Ness St NW

Duration: 7AM~2PM; 4PM~7PM Recorder: Jianwei/Wengang

Turning Movement Data - 15 Minutes Interval

Street	North Leg Nebraska				East Leg Vanness				South Leg Nebraska				West Leg Vanness			
Start	Right	Thru	Left		Right	Thru	Left		Right	Thru	Left		Right	Thru	Left	
7:00 AM	0	7	0		0	0	1		0	4	0		0	0	0	
7:15 AM	2	13	0		0	0	0		2	10	0		0	1	0	
7:30 AM	1	16	0		0	0	0		1	6	0		0	0	0	
7:45 AM	0	8	0		0	0	0		1	8	0		0	0	0	
8:00 AM	0	11	0		0	0	0		1	6	0		0	0	1	
8:15 AM	0	18	0		0	0	1		0	11	0		0	0	0	
8:30 AM	0	10	0		0	0	0		3	10	0		0	0	0	
8:45 AM	0	16	0		0	0	1		1	12	0		0	0	0	
9:00 AM	0	22	0		0	2	0		0	8	0		0	0	0	
9:15 AM	0	14	0		0	0	3		1	11	0		0	0	0	
9:30 AM	0	10	0		0	1	2		6	15	0		0	0	0	
9:45 AM	0	15	0		0	0	2		2	10	0		0	0	1	
10:00 AM	0	10	1		0	0	2		1	11	1		0	0	1	
10:15 AM	0	8	0		0	0	2		1	13	0		0	0	1	
10:30 AM	0	11	0		0	2	0		1	12	0		0	1	0	
10:45 AM	0	14	0		0	0	3		0	11	0		0	0	0	
11:00 AM	0	0	0		0	0	0		0	13	0		1	0	0	
11:15 AM	0	0	0		0	1	2		0	12	0		0	0	0	
11:30 AM	0	0	0		0	0	0		2	11	0		0	0	0	
11:45 AM	1	1	0		0	1	2		2	14	0		0	1	0	
12:00 PM	0	0	0		0	0	1		1	11	0		0	0	0	
12:15 PM	0	0	0		0	0	1		0	11	0		0	0	0	
12:30 PM	0	0	0		0	0	1		2	16	0		0	0	0	
12:45 PM	0	0	0		0	0	2		1	4	0		0	0	0	
1:00 PM	0	0	0		0	1	1		0	9	0		0	0	0	
1:15 PM	1	1	0		0	0	0		0	9	0		0	1	0	
1:30 PM	0	0	0		0	0	2		1	8	0		0	0	0	
1:45 PM	0	0	0		0	1	1		1	9	0		0	0	0	
4:00 PM	0	6	0		0	2	2		1	10	0		0	0	0	
4:15 PM	0	8	0		0	0	0		0	7	0		0	0	0	
4:30 PM	0	7	0		0	0	0		1	10	0		0	0	1	
4:45 PM	0	10	0		0	0	0		0	8	0		0	0	0	
5:00 PM	0	8	0		0	0	0		2	10	0		0	0	0	
5:15 PM	0	5	0		0	0	0		0	8	1		0	0	0	
5:30 PM	0	7	0		0	0	0		1	13	0		0	0	0	
5:45 PM	0	6	0		0	0	0		0	5	0		0	1	0	
6:00 PM	0	5	0		0	1	0		0	7	0		0	1	0	
6:15 PM	0	9	0		0	0	0		0	7	0		0	0	0	
6:30 PM	0	5	0		0	0	1		0	7	0		0	0	0	
6:45 PM	0	8	0		0	0	0		0	7	0		0	0	0	

Turning Movement Counts Data Sheet (Bike)

Precision Systems, Inc.

Date: 2/27/2013 Location: Nebraska Ave and Van Ness St NW

Duration: 7AM~2PM; 4PM~7PM Recorder: Jianwei/Wengang

Turning Movement Data - 15 Minutes Interval

Street	North Leg Nebraska				East Leg Vanness				South Leg Nebraska				West Leg Vanness			
Start	Right	Thru	Left		Right	Thru	Left		Right	Thru	Left		Right	Thru	Left	
7:00 AM	0	1	0		0	1	0		0	0	0		0	1	0	
7:15 AM	0	0	0		0	0	0		0	1	0		0	0	0	
7:30 AM	0	0	0		0	0	1		1	0	0		0	1	0	
7:45 AM	0	1	0		0	0	0		0	0	0		0	0	0	
8:00 AM	0	0	0		0	1	0		0	1	0		0	5	0	
8:15 AM	0	3	0		0	0	0		0	1	0		3	1	0	
8:30 AM	0	3	0		0	0	0		0	1	0		0	1	0	
8:45 AM	0	1	0		0	0	0		0	2	0		0	1	0	
9:00 AM	0	1	1		0	1	1		1	0	0		0	1	0	
9:15 AM	0	1	0		0	0	1		0	0	0		0	0	0	
9:30 AM	0	1	0		0	0	0		0	0	0		1	0	0	
9:45 AM	0	1	0		0	0	0		0	0	0		0	0	0	
10:00 AM	0	2	0		0	0	2		0	0	0		0	0	0	
10:15 AM	0	1	0		0	0	0		0	0	0		0	0	0	
10:30 AM	0	2	0		0	0	0		0	0	0		0	0	0	
10:45 AM	0	1	0		0	0	3		0	0	0		0	0	0	
11:00 AM	0	0	0		0	0	1		1	3	0		0	0	0	
11:15 AM	1	1	0		0	0	0		0	1	0		0	1	0	
11:30 AM	0	0	0		0	0	0		0	2	0		0	0	0	
11:45 AM	0	0	0		0	0	0		0	0	0		0	0	0	
12:00 PM	0	0	0		0	0	0		0	1	0		0	0	0	
12:15 PM	0	0	0		0	0	1		0	0	0		0	0	0	
12:30 PM	0	0	0		0	0	0		1	1	0		0	0	0	
12:45 PM	0	0	0		0	0	0		0	0	0		0	0	0	
1:00 PM	0	0	0		0	1	1		0	1	0		0	0	0	
1:15 PM	0	0	0		0	3	1		0	0	0		0	0	0	
1:30 PM	0	0	0		0	0	1		0	2	0		0	0	0	
1:45 PM	0	0	0		0	0	0		1	3	0		0	1	0	
4:00 PM	0	1	0		0	1	0		1	1	0		0	0	0	
4:15 PM	0	1	0		0	0	0		0	0	0		0	0	0	
4:30 PM	0	0	0		0	0	0		0	1	0		0	0	0	
4:45 PM	0	2	0		0	0	0		0	1	0		0	0	0	
5:00 PM	0	1	0		0	0	1		0	3	0		0	1	0	
5:15 PM	1	3	0		0	0	1		0	1	0		0	1	0	
5:30 PM	0	1	0		0	2	0		2	2	0		0	0	0	
5:45 PM	0	0	0		0	0	0		1	3	0		0	0	0	
6:00 PM	1	2	0		0	0	0		0	0	0		0	1	0	
6:15 PM	0	1	0		0	1	0		1	1	0		0	0	0	
6:30 PM	0	0	0		0	0	0		0	0	0		0	0	0	
6:45 PM	0	0	0		0	1	0		0	0	0		0	0	0	
6:45 PM	0	0	0		0	0	0		0	0	0		0	0	0	

Turning Movement Counts Data Sheet (Pedestrian)

Precision Systems, Inc.

Date: 2/27/2013 Location: Nebraska Ave and Van Ness St NW
Duration: 7AM~2PM; 4PM~7PM Recorder: Jianwei/Wengang

Turning Movement Data - 15 Minutes Interval

Street	North Crosswalk Nebraska	East Crosswalk Vanness	South Crosswalk Nebraska	West Crosswalk Vanness
7:00 AM	1	9	3	7
7:15 AM	1	9	2	5
7:30 AM	3	7	4	7
7:45 AM	2	2	4	6
8:00 AM	5	11	11	8
8:15 AM	1	6	8	11
8:30 AM	2	11	8	12
8:45 AM	2	10	6	14
9:00 AM	5	5	8	13
9:15 AM	1	4	7	10
9:30 AM	3	9	2	6
9:45 AM	1	4	5	6
10:00 AM	0	8	6	7
10:15 AM	3	3	4	4
10:30 AM	2	0	5	6
10:45 AM	1	0	4	8
11:00 AM	1	1	2	10
11:15 AM	0	4	3	11
11:30 AM	2	4	4	10
11:45 AM	1	4	4	14
12:00 PM	0	6	1	13
12:15 PM	0	5	1	9
12:30 PM	2	13	10	13
12:45 PM	3	7	4	12
1:00 PM	4	8	5	11
1:15 PM	2	6	6	16
1:30 PM	3	6	5	15
12:00 AM	0	0	0	0
4:00 PM	3	12	5	18
4:15 PM	6	13	2	17
4:30 PM	8	17	4	17
4:45 PM	3	10	9	37
5:00 PM	9	15	6	26
5:15 PM	2	23	8	35
5:30 PM	9	20	6	28
5:45 PM	3	20	8	16
6:00 PM	4	16	2	12
6:15 PM	1	17	5	19
6:30 PM	1	8	8	15
6:45 PM	3	10	2	19

REVISION								
DESCRIPTION	DATE	COR.	CHK.	APP.	APP.	APP.	APP.	APP.

REG	STATE	PROJECT	SHEET NO.	TOTAL SHEETS
3	D.C.			

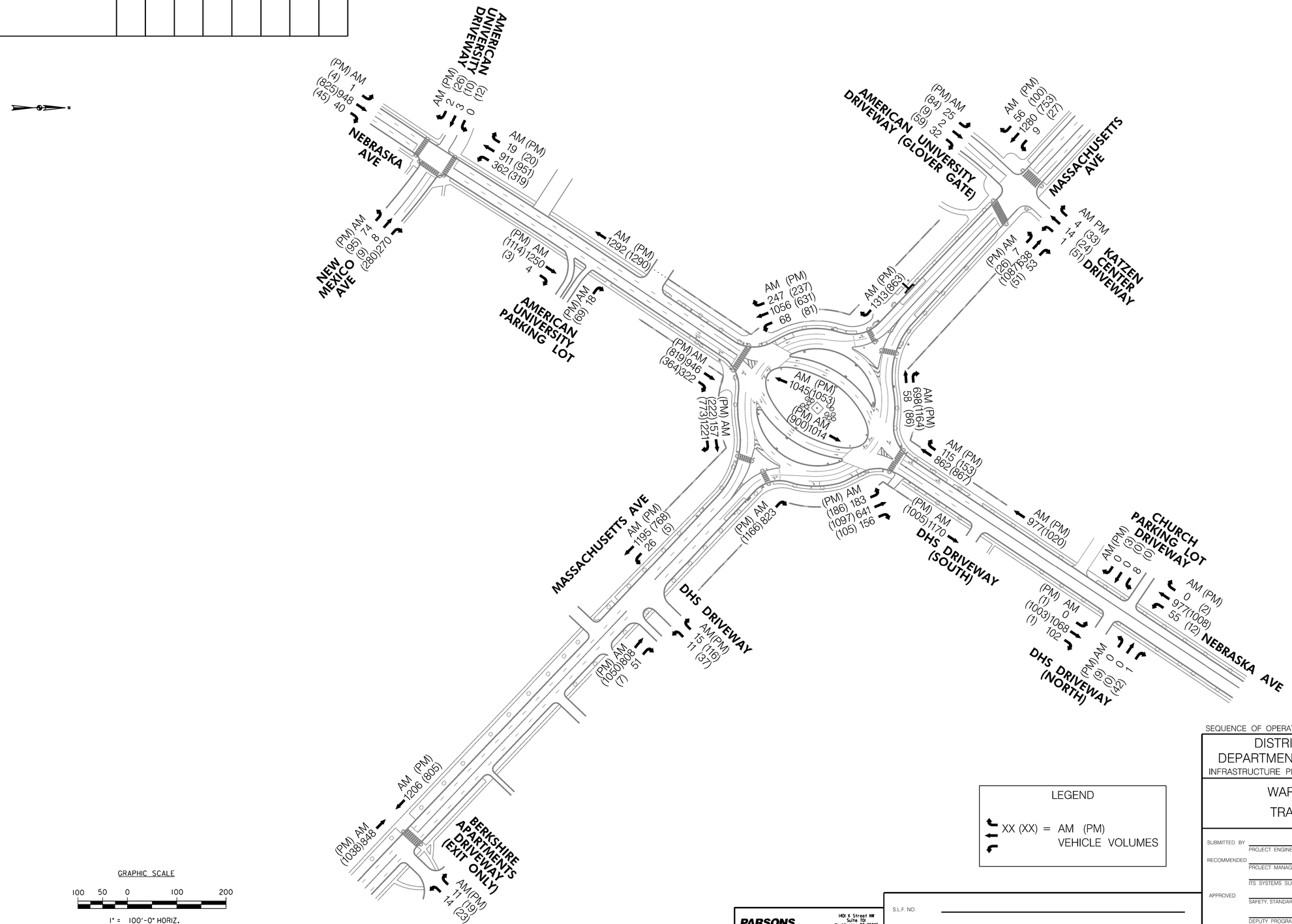

SEQUENCE OF OPERATION DRAWING NO. TS– F

DISTRICT OF COLUMBIA
DEPARTMENT OF TRANSPORTATION
INFRASTRUCTURE PROJECT MANAGEMENT ADMINISTRATION

WARD CIRCLE, N.W.
TRAFFIC VOLUMES

SUBMITTED BY — PROJECT ENGINEER — DATE
RECOMMENDED — PROJECT MANAGER — DATE
APPROVED — ITS SYSTEMS SUPPORT BRANCH MANAGER — DATE
SAFETY, STANDARDS AND DATA ANALYSIS, MANAGER — DATE
DEPUTY PROGRAM MANAGER — DATE
PROGRAM MANAGER — DATE

FIELD CHECKED BY
DESIGNED BY
DRAWN BY
REVIEWED BY
DATE 05–2013
SCALE 1" = 100'
SHEET 1 OF 1
DRAWING NO.

PARSONS BRINCKERHOFF
1401 K Street NW
Suite 701
Washington DC 20005
(Ph) 202-783-0241
(Fax) 202-783-0229
http://www.pbworld.com

S.L.F. NO.
APPROVED BY — DATE

C:\Users\andrewes\Desktop\Ward Circle\Working\SN2-0002_Ward Circle Traffic Volumes.dgn
Friday, May 31, 2013 AT 09:01 AM

REVISION								
DESCRIPTION	DATE	COR.	CHK.	APP.	APP.	APP.	APP.	APP.

REG	STATE	PROJECT	SHEET NO.	TOTAL SHEETS
3	D.C.			

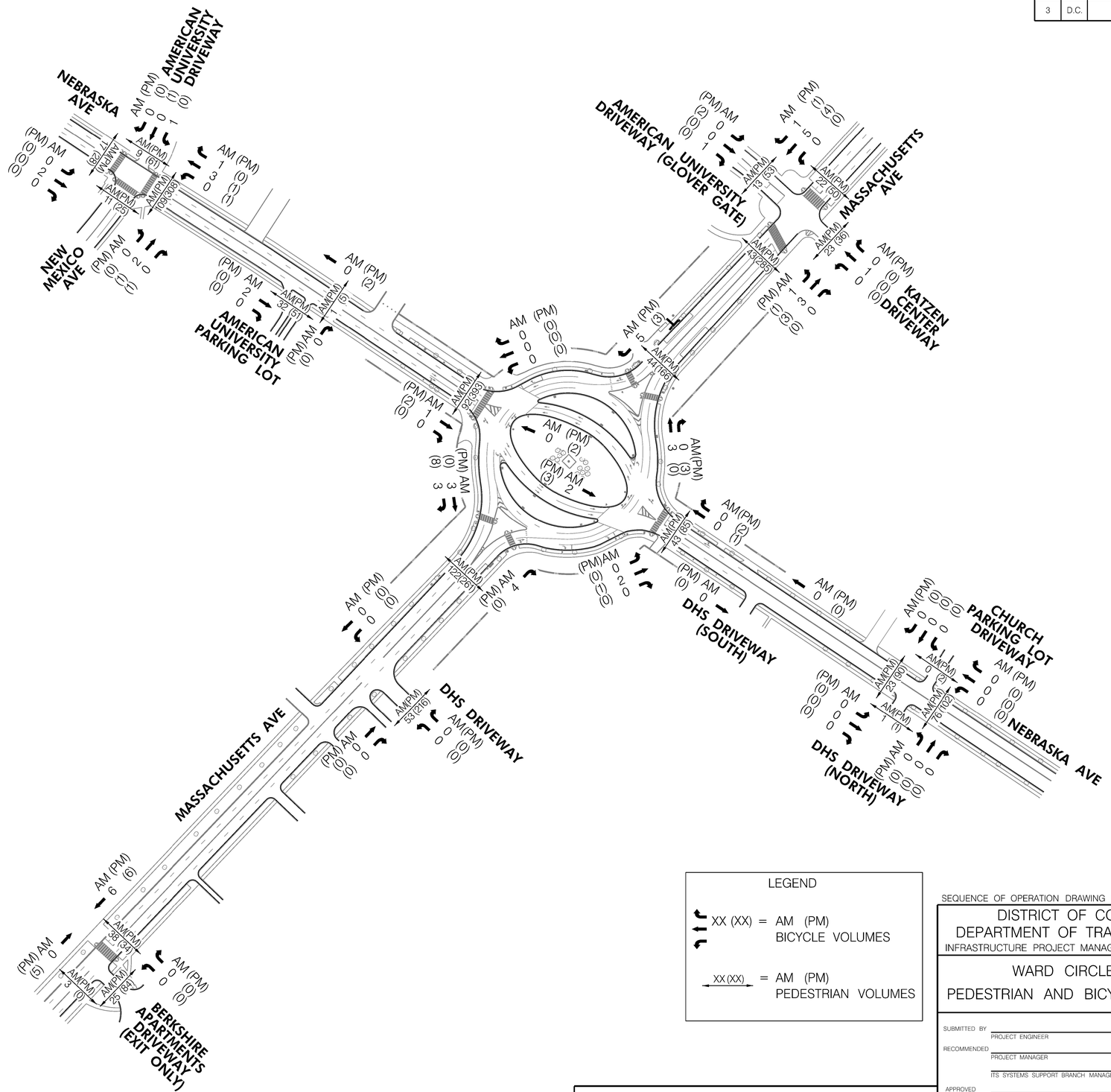

LEGEND

XX (XX) = AM (PM) BICYCLE VOLUMES

XX (XX) = AM (PM) PEDESTRIAN VOLUMES

GRAPHIC SCALE

100 50 0 100 200

1" = 100'-0" HORIZ.

SEQUENCE OF OPERATION DRAWING NO. TS– F

DISTRICT OF COLUMBIA
DEPARTMENT OF TRANSPORTATION
INFRASTRUCTURE PROJECT MANAGEMENT ADMINISTRATION

WARD CIRCLE, N.W.
PEDESTRIAN AND BICYCLE VOLUMES

SUBMITTED BY — PROJECT ENGINEER — DATE
RECOMMENDED — PROJECT MANAGER — DATE
ITS SYSTEMS SUPPORT BRANCH MANAGER — DATE
APPROVED — SAFETY, STANDARDS AND DATA ANALYSIS, MANAGER — DATE
DEPUTY PROGRAM MANAGER — DATE
PROGRAM MANAGER — DATE

FIELD CHECKED BY
DESIGNED BY
DRAWN BY
REVIEWED BY
DATE 05–2013
SCALE 1" = 100'
SHEET 1 OF 1
DRAWING NO.

PARSONS BRINCKERHOFF
1401 K Street NW
Suite 701
Washington DC 20005
(Ph) 202-783-0241
(Fax) 202-783-0229
http://www.pbworld.com

S.L.F. NO.
APPROVED BY — DATE

C:\Users\andrewes\Desktop\Ward Circle\Working\SN2-0002_Ward Circle Traffic Volumes peds and bikes.dgn
Friday, May 31, 2013 AT 09:03 AM

Appendix B – Crash Data Analysis Results

REG	STATE	PROJECT	SHEET NO.	TOTAL SHEETS
	D.C.			

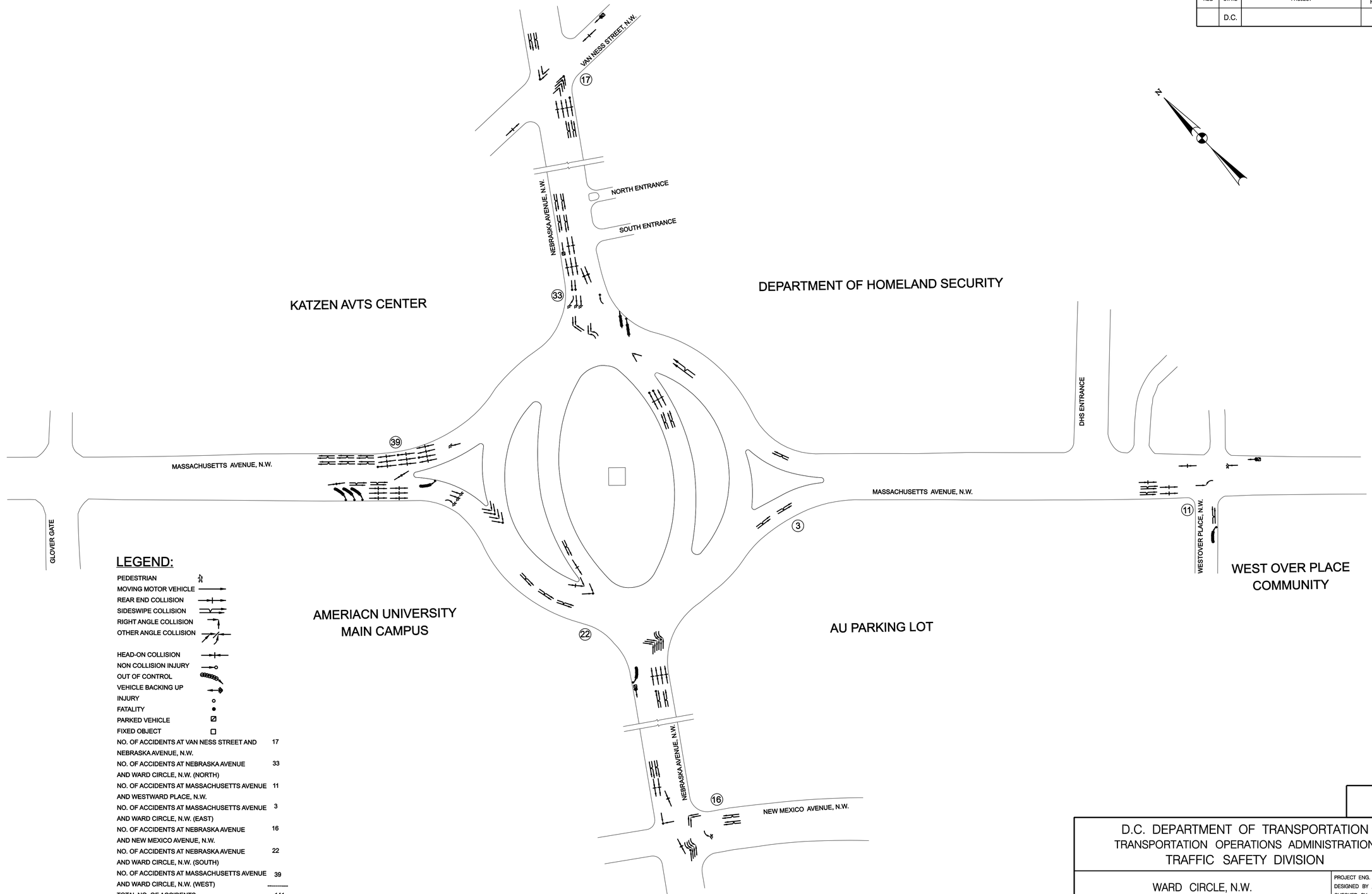

LEGEND:

PEDESTRIAN
MOVING MOTOR VEHICLE
REAR END COLLISION
SIDESWIPE COLLISION
RIGHT ANGLE COLLISION
OTHER ANGLE COLLISION

HEAD-ON COLLISION
NON COLLISION INJURY
OUT OF CONTROL
VEHICLE BACKING UP
INJURY
FATALITY
PARKED VEHICLE
FIXED OBJECT

NO. OF ACCIDENTS AT VAN NESS STREET AND NEBRASKA AVENUE, N.W.	17
NO. OF ACCIDENTS AT NEBRASKA AVENUE AND WARD CIRCLE, N.W. (NORTH)	33
NO. OF ACCIDENTS AT MASSACHUSETTS AVENUE AND WESTWARD PLACE, N.W.	11
NO. OF ACCIDENTS AT MASSACHUSETTS AVENUE AND WARD CIRCLE, N.W. (EAST)	3
NO. OF ACCIDENTS AT NEBRASKA AVENUE AND NEW MEXICO AVENUE, N.W.	16
NO. OF ACCIDENTS AT NEBRASKA AVENUE AND WARD CIRCLE, N.W. (SOUTH)	22
NO. OF ACCIDENTS AT MASSACHUSETTS AVENUE AND WARD CIRCLE, N.W. (WEST)	39
TOTAL NO. OF ACCIDENTS	141

Precision Systems, Inc.
Engineers, Planners and Architects
WASHINGTON, D.C.

NO	DESCRIPTION	NAME	DATE

REVISIONS

D.C. DEPARTMENT OF TRANSPORTATION
TRANSPORTATION OPERATIONS ADMINISTRATION
TRAFFIC SAFETY DIVISION

WARD CIRCLE, N.W.
TRAFFIC SAFETY IMPROVEMENT

COLLISION DIAGRAM

PROJECT ENG. AYY
DESIGNED BY MYH
CHECKED BY AYY
DRAWN BY SG
PROJECT MGR. MYH

DIVISION CHIEF
DATE
FILE
SHEET OF

p:\50230\Ward Circle Traffic Analysis\CollisionDiagram\PCD_50230.dgn
Tuesday, April 23, 2013 AT 03:33 PM
$PENTBLS$
$PLTDRVS$

DC Department of Transportation - Traffic Accident Reporting and Analysis System

Accident Summary Report (R-7)

Intersection: NEBRASKA AVE AND WARD CIR,NW

Time Period Covered: From 2009 to 2011 **Prepared By:** admin TARAS **Prepared Date:** 3/19/2013

Total Number of Accident:	33
Total Number of Fatalities:	0
Total Number of Injuries:	16
Total Number of Disabling Injuries:	1
Total Number of NonDisabling Injuries:	3
Total Number of Pedestrians Involved:	4
Total Number of Bicycles Involved:	0
Total Number of Motorcycles Involved:	0

Collision Type	#ACC	%	Collision Type	#ACC	%
Right Angle:	5	15.2%	Fixed Object:	1	3.0%
Left Turn:	4	12.1%	Ran Off Road:	0	0.0%
Right Turn:	0	0.0%	Ped. Involved:	3	9.1%
Rear End:	6	18.2%	Backing:	0	0.0%
Side Swiped:	8	24.2%	Non Collision:	1	3.0%
Head On:	2	6.1%	Under/Over Ride:	0	0.0%
Parked:	1	3.0%	Unspecified:	2	6.1%

Time of Day	#ACC	%
07:30 ~ 09:30:	5	15.2%
09:30 ~ 11:30:	3	9.1%
11:30 ~ 13:30:	1	3.0%
13:30 ~ 16:00:	6	18.2%
16:00 ~18:30:	5	15.2%
18:30 ~ 07:30:	13	39.4%
Unspecified:	0	0.0%

Day o fweek	#ACC	%
Sunday:	2	6.1%
Monday:	5	15.2%
Tuesday:	7	21.2%
Wednesday:	7	21.2%
Thursday:	4	12.1%
Friday:	5	15.2%
Saturday:	3	9.1%

Weather Condition	#ACC	%
Clear:	26	78.8%
Rain:	5	15.2%
Snow:	1	3.0%
Sleet/Hail:	0	0.0%
Fog/Mist:	0	0.0%
Crosswind/Blowing Sand:	0	0.0%
Unspecified:	1	3.0%

Surface Condition	#ACC	%
Dry:	27	81.8%
Wet:	6	18.2%
Snow/Ice:	0	0.0%
Slush:	0	0.0%
Water/Sand:	0	0.0%
Repairing:	0	0.0%
Unspecified:	0	0.0%

Type of Vehicle	#VEH	%
Passenger Car:	46	71.9%
Bus:	4	6.3%
Truck:	9	14.1%
Taxi:	3	4.7%
Minivan:	0	0.0%
Police/Emergency Vehicle:	1	1.6%
Motorcycle/Moped:	0	0.0%
Bicycle:	0	0.0%
Fixed Object:	0	0.0%
Unspecified:	1	1.6%

Accident Severity Type	#ACC	%
Fatal Collision:	0	0.0%
Injury Collision:	11	33.3%
PDO Collision:	22	66.7%

Light Condition	#ACC	%
Daylight:	18	54.5%
Dawn/Dusk:	1	3.0%
Dark(Lighted):	12	36.4%
Dark(Not Lighted):	1	3.0%
Dark(Unknown Lighting):	0	0.0%
Unspecified:	1	3.0%

Contributing Factor	#VEH	%
Driver: Speed:	0	0.0%
Driver: Alcohol/Drug:	0	0.0%
Driver: Electronic Device:	1	1.6%
Driver: Others:	15	23.4%
Vehicle:	0	0.0%
Roadway:	0	0.0%
Unspecified:	48	75.0%

Pedestrian Actions	#ACC	%
In Crosswalk with Signal:	2	50.0%
In Crosswalk against Signal:	0	0.0%
In Crosswalk no Signal:	1	25.0%
In Unmarked Crosswalk:	0	0.0%
Not in Crosswalk:	1	25.0%
From Between Parked Cars:	0	0.0%
Unspecified:	0	0.0%

Year	Accidents	Fatalities	Injuries	Disabling Injuries	Pedestrians	Bicycles	Motorcycles
2009	3	0	0	0	0	0	0
2010	12	0	6	0	2	0	0
2011	18	0	10	3	2	0	0

19 Records are not approved as of 3/19/2013 3:20:16 PM

DC Department of Transportation - Traffic Accident Reporting and Analysis System

Accident Summary Report (R-7)

Intersection: NEBRASKA AVE AND WARD CIR,NW

Time Period Covered: From 2009 to 2011 **Prepared By:** admin TARAS **Prepared Date:** 3/19/2013

Total Number of Accident:	22
Total Number of Fatalities:	0
Total Number of Injuries:	7
Total Number of Disabling Injuries:	0
Total Number of NonDisabling Injuries:	1
Total Number of Pedestrians Involved:	0
Total Number of Bicycles Involved:	0
Total Number of Motorcycles Involved:	1

Collision Type	#ACC	%	Collision Type	#ACC	%
Right Angle:	3	13.6%	Fixed Object:	1	4.5%
Left Turn:	5	22.7%	Ran Off Road:	0	0.0%
Right Turn:	1	4.5%	Ped. Involved:	0	0.0%
Rear End:	4	18.2%	Backing:	1	4.5%
Side Swiped:	5	22.7%	Non Collision:	1	4.5%
Head On:	0	0.0%	Under/Over Ride:	0	0.0%
Parked:	0	0.0%	Unspecified:	1	4.5%

Time of Day	#ACC	%
07:30 ~ 09:30:	3	13.6%
09:30 ~ 11:30:	3	13.6%
11:30 ~ 13:30:	4	18.2%
13:30 ~ 16:00:	2	9.1%
16:00 ~18:30:	3	13.6%
18:30 ~ 07:30:	7	31.8%
Unspecified:	0	0.0%

Day o fweek	#ACC	%
Sunday:	3	13.6%
Monday:	5	22.7%
Tuesday:	6	27.3%
Wednesday:	2	9.1%
Thursday:	1	4.5%
Friday:	2	9.1%
Saturday:	3	13.6%

Weather Condition	#ACC	%
Clear:	19	86.4%
Rain:	1	4.5%
Snow:	2	9.1%
Sleet/Hail:	0	0.0%
Fog/Mist:	0	0.0%
Crosswind/Blowing Sand:	0	0.0%
Unspecified:	0	0.0%

Surface Condition	#ACC	%
Dry:	18	81.8%
Wet:	3	13.6%
Snow/Ice:	0	0.0%
Slush:	0	0.0%
Water/Sand:	0	0.0%
Repairing:	0	0.0%
Unspecified:	1	4.5%

Type of Vehicle	#VEH	%
Passenger Car:	32	78.0%
Bus:	1	2.4%
Truck:	2	4.9%
Taxi:	4	9.8%
Minivan:	0	0.0%
Police/Emergency Vehicle:	1	2.4%
Motorcycle/Moped:	1	2.4%
Bicycle:	0	0.0%
Fixed Object:	0	0.0%
Unspecified:	0	0.0%

Accident Severity Type	#ACC	%
Fatal Collision:	0	0.0%
Injury Collision:	7	31.8%
PDO Collision:	15	68.2%

Light Condition	#ACC	%
Daylight:	14	63.6%
Dawn/Dusk:	0	0.0%
Dark(Lighted):	8	36.4%
Dark(Not Lighted):	0	0.0%
Dark(Unknown Lighting):	0	0.0%
Unspecified:	0	0.0%

Contributing Factor	#VEH	%
Driver: Speed:	0	0.0%
Driver: Alcohol/Drug:	0	0.0%
Driver: Electronic Device:	2	4.9%
Driver: Others:	4	9.8%
Vehicle:	0	0.0%
Roadway:	0	0.0%
Unspecified:	35	85.4%

Pedestrian Actions	#ACC	%
In Crosswalk with Signal:	0	0.0%
In Crosswalk against Signal:	0	0.0%
In Crosswalk no Signal:	0	0.0%
In Unmarked Crosswalk:	0	0.0%
Not in Crosswalk:	0	0.0%
From Between Parked Cars:	0	0.0%
Unspecified:	0	0.0%

Year	Accidents	Fatalities	Injuries	Disabling Injuries	Pedestrians	Bicycles	Motorcycles
2009	15	0	6	1	0	0	1
2010	4	0	1	0	0	0	0
2011	3	0	0	0	0	0	0

14 Records are not approved as of 3/19/2013 3:20:44 PM

DC Department of Transportation - Traffic Accident Reporting and Analysis System

Accident Summary Report (R-7)

Intersection: MASSACHUSETTS AVE AND WARD CIR,NW

Time Period Covered: From 2009 to 2011 **Prepared By:** admin TARAS **Prepared Date:** 3/19/2013

Total Number of Accident:	3
Total Number of Fatalities:	0
Total Number of Injuries:	0
Total Number of Disabling Injuries:	0
Total Number of NonDisabling Injuries:	0
Total Number of Pedestrians Involved:	0
Total Number of Bicycles Involved:	0
Total Number of Motorcycles Involved:	0

Collision Type	#ACC	%	Collision Type	#ACC	%
Right Angle:	0	0.0%	Fixed Object:	0	0.0%
Left Turn:	0	0.0%	Ran Off Road:	0	0.0%
Right Turn:	1	33.3%	Ped. Involved:	0	0.0%
Rear End:	0	0.0%	Backing:	0	0.0%
Side Swiped:	1	33.3%	Non Collision:	0	0.0%
Head On:	0	0.0%	Under/Over Ride:	0	0.0%
Parked:	0	0.0%	Unspecified:	1	33.3%

Time of Day	#ACC	%
07:30 ~ 09:30:	0	0.0%
09:30 ~ 11:30:	0	0.0%
11:30 ~ 13:30:	1	33.3%
13:30 ~ 16:00:	1	33.3%
16:00 ~18:30:	0	0.0%
18:30 ~ 07:30:	1	33.3%
Unspecified:	0	0.0%

Day o fweek	#ACC	%
Sunday:	0	0.0%
Monday:	0	0.0%
Tuesday:	0	0.0%
Wednesday:	0	0.0%
Thursday:	2	66.7%
Friday:	1	33.3%
Saturday:	0	0.0%

Weather Condition	#ACC	%
Clear:	2	66.7%
Rain:	0	0.0%
Snow:	0	0.0%
Sleet/Hail:	0	0.0%
Fog/Mist:	0	0.0%
Crosswind/Blowing Sand:	0	0.0%
Unspecified:	1	33.3%

Surface Condition	#ACC	%
Dry:	2	66.7%
Wet:	0	0.0%
Snow/Ice:	0	0.0%
Slush:	0	0.0%
Water/Sand:	0	0.0%
Repairing:	0	0.0%
Unspecified:	1	33.3%

Type of Vehicle	#VEH	%
Passenger Car:	5	83.3%
Bus:	0	0.0%
Truck:	1	16.7%
Taxi:	0	0.0%
Minivan:	0	0.0%
Police/Emergency Vehicle:	0	0.0%
Motorcycle/Moped:	0	0.0%
Bicycle:	0	0.0%
Fixed Object:	0	0.0%
Unspecified:	0	0.0%

Accident Severity Type	#ACC	%
Fatal Collision:	0	0.0%
Injury Collision:	0	0.0%
PDO Collision:	3	100.0%

Light Condition	#ACC	%
Daylight:	2	66.7%
Dawn/Dusk:	0	0.0%
Dark(Lighted):	0	0.0%
Dark(Not Lighted):	0	0.0%
Dark(Unknown Lighting):	0	0.0%
Unspecified:	1	33.3%

Contributing Factor	#VEH	%
Driver: Speed:	1	16.7%
Driver: Alcohol/Drug:	0	0.0%
Driver: Electronic Device:	0	0.0%
Driver: Others:	0	0.0%
Vehicle:	0	0.0%
Roadway:	0	0.0%
Unspecified:	5	83.3%

Pedestrian Actions	#ACC	%
In Crosswalk with Signal:	0	0.0%
In Crosswalk against Signal:	0	0.0%
In Crosswalk no Signal:	0	0.0%
In Unmarked Crosswalk:	0	0.0%
Not in Crosswalk:	0	0.0%
From Between Parked Cars:	0	0.0%
Unspecified:	0	0.0%

Year	Accidents	Fatalities	Injuries	Disabling Injuries	Pedestrians	Bicycles	Motorcycles
2010	1	0	0	0	0	0	0
2011	2	0	0	0	0	0	0

2 Records are not approved as of 3/19/2013 3:21:17 PM

DC Department of Transportation - Traffic Accident Reporting and Analysis System

Accident Summary Report (R-7)

Intersection: MASSACHUSETTS AVE AND WARD CIR,NW

Time Period Covered: From 2009 to 2011 **Prepared By:** admin TARAS **Prepared Date:** 3/19/2013

Total Number of Accident:	39
Total Number of Fatalities:	0
Total Number of Injuries:	16
Total Number of Disabling Injuries:	0
Total Number of NonDisabling Injuries:	6
Total Number of Pedestrians Involved:	4
Total Number of Bicycles Involved:	0
Total Number of Motorcycles Involved:	0

Collision Type	#ACC	%	Collision Type	#ACC	%
Right Angle:	5	12.8%	Fixed Object:	3	7.7%
Left Turn:	1	2.6%	Ran Off Road:	1	2.6%
Right Turn:	1	2.6%	Ped. Involved:	4	10.3%
Rear End:	14	35.9%	Backing:	0	0.0%
Side Swiped:	7	17.9%	Non Collision:	0	0.0%
Head On:	1	2.6%	Under/Over Ride:	0	0.0%
Parked:	0	0.0%	Unspecified:	2	5.1%

Time of Day	#ACC	%
07:30 ~ 09:30:	1	2.6%
09:30 ~ 11:30:	2	5.1%
11:30 ~ 13:30:	9	23.1%
13:30 ~ 16:00:	10	25.6%
16:00 ~18:30:	3	7.7%
18:30 ~ 07:30:	14	35.9%
Unspecified:	0	0.0%

Day o fweek	#ACC	%
Sunday:	5	12.8%
Monday:	2	5.1%
Tuesday:	7	17.9%
Wednesday:	8	20.5%
Thursday:	7	17.9%
Friday:	5	12.8%
Saturday:	5	12.8%

Weather Condition	#ACC	%
Clear:	35	89.7%
Rain:	4	10.3%
Snow:	0	0.0%
Sleet/Hail:	0	0.0%
Fog/Mist:	0	0.0%
Crosswind/Blowing Sand:	0	0.0%
Unspecified:	0	0.0%

Surface Condition	#ACC	%
Dry:	35	89.7%
Wet:	4	10.3%
Snow/Ice:	0	0.0%
Slush:	0	0.0%
Water/Sand:	0	0.0%
Repairing:	0	0.0%
Unspecified:	0	0.0%

Type of Vehicle	#VEH	%
Passenger Car:	59	78.7%
Bus:	4	5.3%
Truck:	3	4.0%
Taxi:	3	4.0%
Minivan:	0	0.0%
Police/Emergency Vehicle:	0	0.0%
Motorcycle/Moped:	0	0.0%
Bicycle:	0	0.0%
Fixed Object:	0	0.0%
Unspecified:	6	8.0%

Accident Severity Type	#ACC	%
Fatal Collision:	0	0.0%
Injury Collision:	14	35.9%
PDO Collision:	25	64.1%

Light Condition	#ACC	%
Daylight:	27	69.2%
Dawn/Dusk:	1	2.6%
Dark(Lighted):	8	20.5%
Dark(Not Lighted):	3	7.7%
Dark(Unknown Lighting):	0	0.0%
Unspecified:	0	0.0%

Contributing Factor	#VEH	%
Driver: Speed:	0	0.0%
Driver: Alcohol/Drug:	2	2.7%
Driver: Electronic Device:	0	0.0%
Driver: Others:	13	17.3%
Vehicle:	0	0.0%
Roadway:	0	0.0%
Unspecified:	60	80.0%

Pedestrian Actions	#ACC	%
In Crosswalk with Signal:	0	0.0%
In Crosswalk against Signal:	2	50.0%
In Crosswalk no Signal:	2	50.0%
In Unmarked Crosswalk:	0	0.0%
Not in Crosswalk:	0	0.0%
From Between Parked Cars:	0	0.0%
Unspecified:	0	0.0%

Year	Accidents	Fatalities	Injuries	Disabling Injuries	Pedestrians	Bicycles	Motorcycles
2009	15	0	8	2	2	0	0
2010	12	0	4	1	1	0	0
2011	12	0	4	3	1	0	0

27 Records are not approved as of 3/19/2013 3:21:46 PM

DC Department of Transportation - Traffic Accident Reporting and Analysis System

Accident Summary Report (R-7)

Intersection: NEBRASKA AVE AND NEW MEXICO AVE,NW

Time Period Covered: From 2009 to 2011 **Prepared By:** admin TARAS **Prepared Date:** 3/19/2013

Total Number of Accident:	16
Total Number of Fatalities:	0
Total Number of Injuries:	7
Total Number of Disabling Injuries:	0
Total Number of NonDisabling Injuries:	2
Total Number of Pedestrians Involved:	1
Total Number of Bicycles Involved:	1
Total Number of Motorcycles Involved:	0

Collision Type	#ACC	%	Collision Type	#ACC	%
Right Angle:	4	25.0%	Fixed Object:	0	0.0%
Left Turn:	1	6.3%	Ran Off Road:	0	0.0%
Right Turn:	1	6.3%	Ped. Involved:	1	6.3%
Rear End:	1	6.3%	Backing:	0	0.0%
Side Swiped:	4	25.0%	Non Collision:	0	0.0%
Head On:	1	6.3%	Under/Over Ride:	0	0.0%
Parked:	0	0.0%	Unspecified:	3	18.8%

Time of Day	#ACC	%
07:30 ~ 09:30:	2	12.5%
09:30 ~ 11:30:	2	12.5%
11:30 ~ 13:30:	1	6.3%
13:30 ~ 16:00:	4	25.0%
16:00 ~18:30:	2	12.5%
18:30 ~ 07:30:	5	31.3%
Unspecified:	0	0.0%

Day o fweek	#ACC	%
Sunday:	1	6.3%
Monday:	3	18.8%
Tuesday:	3	18.8%
Wednesday:	2	12.5%
Thursday:	3	18.8%
Friday:	2	12.5%
Saturday:	2	12.5%

Weather Condition	#ACC	%
Clear:	13	81.3%
Rain:	1	6.3%
Snow:	0	0.0%
Sleet/Hail:	0	0.0%
Fog/Mist:	1	6.3%
Crosswind/Blowing Sand:	0	0.0%
Unspecified:	1	6.3%

Surface Condition	#ACC	%
Dry:	13	81.3%
Wet:	3	18.8%
Snow/Ice:	0	0.0%
Slush:	0	0.0%
Water/Sand:	0	0.0%
Repairing:	0	0.0%
Unspecified:	0	0.0%

Type of Vehicle	#VEH	%
Passenger Car:	21	67.7%
Bus:	2	6.5%
Truck:	2	6.5%
Taxi:	2	6.5%
Minivan:	0	0.0%
Police/Emergency Vehicle:	1	3.2%
Motorcycle/Moped:	0	0.0%
Bicycle:	1	3.2%
Fixed Object:	0	0.0%
Unspecified:	2	6.5%

Accident Severity Type	#ACC	%
Fatal Collision:	0	0.0%
Injury Collision:	6	37.5%
PDO Collision:	10	62.5%

Light Condition	#ACC	%
Daylight:	10	62.5%
Dawn/Dusk:	0	0.0%
Dark(Lighted):	6	37.5%
Dark(Not Lighted):	0	0.0%
Dark(Unknown Lighting):	0	0.0%
Unspecified:	0	0.0%

Contributing Factor	#VEH	%
Driver: Speed:	1	3.2%
Driver: Alcohol/Drug:	1	3.2%
Driver: Electronic Device:	0	0.0%
Driver: Others:	9	29.0%
Vehicle:	0	0.0%
Roadway:	0	0.0%
Unspecified:	20	64.5%

Pedestrian Actions	#ACC	%
In Crosswalk with Signal:	0	0.0%
In Crosswalk against Signal:	0	0.0%
In Crosswalk no Signal:	0	0.0%
In Unmarked Crosswalk:	0	0.0%
Not in Crosswalk:	0	0.0%
From Between Parked Cars:	0	0.0%
Unspecified:	1	100.0%

Year	Accidents	Fatalities	Injuries	Disabling Injuries	Pedestrians	Bicycles	Motorcycles
2009	6	0	1	0	0	0	0
2010	3	0	3	0	0	0	0
2011	7	0	3	2	1	1	0

8 Records are not approved as of 3/19/2013 3:13:52 PM

DC Department of Transportation - Traffic Accident Reporting and Analysis System

Accident Summary Report (R-7)

Intersection: MASSACHUSETTS AVE AND WESTOVER PL,NW

Time Period Covered: From 2009 to 2011 **Prepared By:** admin TARAS **Prepared Date:** 3/19/2013

Total Number of Accident:	11
Total Number of Fatalities:	0
Total Number of Injuries:	5
Total Number of Disabling Injuries:	0
Total Number of NonDisabling Injuries:	4
Total Number of Pedestrians Involved:	1
Total Number of Bicycles Involved:	0
Total Number of Motorcycles Involved:	0

Collision Type	#ACC	%	Collision Type	#ACC	%
Right Angle:	0	0.0%	Fixed Object:	1	9.1%
Left Turn:	1	9.1%	Ran Off Road:	0	0.0%
Right Turn:	0	0.0%	Ped. Involved:	1	9.1%
Rear End:	3	27.3%	Backing:	0	0.0%
Side Swiped:	4	36.4%	Non Collision:	0	0.0%
Head On:	0	0.0%	Under/Over Ride:	0	0.0%
Parked:	1	9.1%	Unspecified:	0	0.0%

Time of Day	#ACC	%
07:30 ~ 09:30:	2	18.2%
09:30 ~ 11:30:	1	9.1%
11:30 ~ 13:30:	1	9.1%
13:30 ~ 16:00:	0	0.0%
16:00 ~18:30:	2	18.2%
18:30 ~ 07:30:	5	45.5%
Unspecified:	0	0.0%

Day o fweek	#ACC	%
Sunday:	0	0.0%
Monday:	4	36.4%
Tuesday:	0	0.0%
Wednesday:	0	0.0%
Thursday:	3	27.3%
Friday:	4	36.4%
Saturday:	0	0.0%

Weather Condition	#ACC	%
Clear:	10	90.9%
Rain:	1	9.1%
Snow:	0	0.0%
Sleet/Hail:	0	0.0%
Fog/Mist:	0	0.0%
Crosswind/Blowing Sand:	0	0.0%
Unspecified:	0	0.0%

Surface Condition	#ACC	%
Dry:	10	90.9%
Wet:	1	9.1%
Snow/Ice:	0	0.0%
Slush:	0	0.0%
Water/Sand:	0	0.0%
Repairing:	0	0.0%
Unspecified:	0	0.0%

Type of Vehicle	#VEH	%
Passenger Car:	15	68.2%
Bus:	4	18.2%
Truck:	0	0.0%
Taxi:	0	0.0%
Minivan:	0	0.0%
Police/Emergency Vehicle:	0	0.0%
Motorcycle/Moped:	0	0.0%
Bicycle:	0	0.0%
Fixed Object:	0	0.0%
Unspecified:	3	13.6%

Accident Severity Type	#ACC	%
Fatal Collision:	0	0.0%
Injury Collision:	5	45.5%
PDO Collision:	6	54.5%

Light Condition	#ACC	%
Daylight:	6	54.5%
Dawn/Dusk:	2	18.2%
Dark(Lighted):	2	18.2%
Dark(Not Lighted):	0	0.0%
Dark(Unknown Lighting):	0	0.0%
Unspecified:	1	9.1%

Contributing Factor	#VEH	%
Driver: Speed:	0	0.0%
Driver: Alcohol/Drug:	0	0.0%
Driver: Electronic Device:	0	0.0%
Driver: Others:	6	27.3%
Vehicle:	0	0.0%
Roadway:	0	0.0%
Unspecified:	16	72.7%

Pedestrian Actions	#ACC	%
In Crosswalk with Signal:	0	0.0%
In Crosswalk against Signal:	0	0.0%
In Crosswalk no Signal:	0	0.0%
In Unmarked Crosswalk:	0	0.0%
Not in Crosswalk:	0	0.0%
From Between Parked Cars:	0	0.0%
Unspecified:	1	100.0%

Year	Accidents	Fatalities	Injuries	Disabling Injuries	Pedestrians	Bicycles	Motorcycles
2009	3	0	1	1	0	0	0
2010	5	0	3	3	1	0	0
2011	3	0	1	0	0	0	0

4 Records are not approved as of 3/19/2013 3:48:55 PM

DC Department of Transportation - Traffic Accident Reporting and Analysis System

Accident Summary Report (R-7)

Intersection: NEBRASKA AVE AND VAN NESS ST,NW

Time Period Covered: From 2009 to 2011 **Prepared By:** admin TARAS **Prepared Date:** 3/19/2013

Total Number of Accident:	17
Total Number of Fatalities:	0
Total Number of Injuries:	10
Total Number of Disabling Injuries:	0
Total Number of NonDisabling Injuries:	0
Total Number of Pedestrians Involved:	0
Total Number of Bicycles Involved:	0
Total Number of Motorcycles Involved:	1

Collision Type	#ACC	%	Collision Type	#ACC	%
Right Angle:	5	29.4%	Fixed Object:	0	0.0%
Left Turn:	0	0.0%	Ran Off Road:	1	5.9%
Right Turn:	0	0.0%	Ped. Involved:	0	0.0%
Rear End:	6	35.3%	Backing:	0	0.0%
Side Swiped:	3	17.6%	Non Collision:	0	0.0%
Head On:	0	0.0%	Under/Over Ride:	0	0.0%
Parked:	1	5.9%	Unspecified:	1	5.9%

Time of Day	#ACC	%
07:30 ~ 09:30:	1	5.9%
09:30 ~ 11:30:	2	11.8%
11:30 ~ 13:30:	4	23.5%
13:30 ~ 16:00:	3	17.6%
16:00 ~18:30:	2	11.8%
18:30 ~ 07:30:	5	29.4%
Unspecified:	0	0.0%

Day o fweek	#ACC	%
Sunday:	2	11.8%
Monday:	5	29.4%
Tuesday:	3	17.6%
Wednesday:	4	23.5%
Thursday:	2	11.8%
Friday:	0	0.0%
Saturday:	1	5.9%

Weather Condition	#ACC	%
Clear:	10	58.8%
Rain:	5	29.4%
Snow:	1	5.9%
Sleet/Hail:	0	0.0%
Fog/Mist:	0	0.0%
Crosswind/Blowing Sand:	0	0.0%
Unspecified:	1	5.9%

Surface Condition	#ACC	%
Dry:	10	58.8%
Wet:	6	35.3%
Snow/Ice:	1	5.9%
Slush:	0	0.0%
Water/Sand:	0	0.0%
Repairing:	0	0.0%
Unspecified:	0	0.0%

Type of Vehicle	#VEH	%
Passenger Car:	27	79.4%
Bus:	0	0.0%
Truck:	1	2.9%
Taxi:	1	2.9%
Minivan:	0	0.0%
Police/Emergency Vehicle:	2	5.9%
Motorcycle/Moped:	1	2.9%
Bicycle:	0	0.0%
Fixed Object:	0	0.0%
Unspecified:	2	5.9%

Accident Severity Type	#ACC	%
Fatal Collision:	0	0.0%
Injury Collision:	7	41.2%
PDO Collision:	10	58.8%

Light Condition	#ACC	%
Daylight:	12	70.6%
Dawn/Dusk:	1	5.9%
Dark(Lighted):	2	11.8%
Dark(Not Lighted):	1	5.9%
Dark(Unknown Lighting):	0	0.0%
Unspecified:	1	5.9%

Contributing Factor	#VEH	%
Driver: Speed:	0	0.0%
Driver: Alcohol/Drug:	0	0.0%
Driver: Electronic Device:	0	0.0%
Driver: Others:	4	11.8%
Vehicle:	0	0.0%
Roadway:	0	0.0%
Unspecified:	30	88.2%

Pedestrian Actions	#ACC	%
In Crosswalk with Signal:	0	0.0%
In Crosswalk against Signal:	0	0.0%
In Crosswalk no Signal:	0	0.0%
In Unmarked Crosswalk:	0	0.0%
Not in Crosswalk:	0	0.0%
From Between Parked Cars:	0	0.0%
Unspecified:	0	0.0%

Year	Accidents	Fatalities	Injuries	Disabling Injuries	Pedestrians	Bicycles	Motorcycles
2009	6	0	4	0	0	0	0
2010	5	0	3	0	0	0	0
2011	6	0	3	0	0	0	1

11 Records are not approved as of 3/19/2013 3:19:32 PM

Appendix C - VISSIM Simulation Model Results

2013 Ward Circle NW Existing Traffic Volumes GEH Results

(Massachusetts Ave assumed E-W direction, Nebraska Ave assumed N-S direction)

			AM Peak Hour				PM Peak Hour			
			Volume			GEH	Volume			GEH
Intersection	Approach	Movement	Balanced	Direction	Simulated	GEH <5.0	Balanced	Direction	Simulated	GEH <5.0
Node 12: Int. Massachusetts (E-W) & AU Driveway	NB	L	25	SW-NW	25	0.00	84	SW-NW	83	0.11
		T	2	SW-NE	2	0.00	9	SW-NE	9	0.00
		R	32	SW-SE	37	0.85	59	SW-SE	65	0.76
	SB	L	1	NE-SE	1	0.00	51	NE-SE	51	0.00
		T	14	NE-SW	14	0.00	24	NE-SW	24	0.00
		R	4	NE-NW	4	0.00	33	NE-NW	33	0.00
	EB	L	9	NW-NE	8	0.34	27	NW-NE	28	0.19
		T	1280	NW-SE	1271	0.25	753	NW-SE	758	0.18
		R	56	NW-SW	54	0.27	100	NW-SW	100	0.00
	WB	L	7	SE-SW	14	2.16	26	SE-SW	29	0.57
		T	638	SE-NW	643	0.20	1087	SE-NW	943	4.52
		R	53	SE-NE	51	0.28	51	SE-NE	48	0.43
	Intersection		**2121**	**All**	**2124**	**0.07**	**2304**	**All**	**2171**	**2.81**
Node 13: Int. Massachusetts (E-W) Ave & DHS Driveway	EB	L	26	NW-NE	0	**7.21**	26	NW-NE	0	**7.21**
		T	1221	NW-SE	1196	0.72	773	NW-SE	769	0.14
		T	808	SE-NW	809	0.04	1050	SE-NW	910	4.47
		R	51	SE-NE	51	0.00	7	SE-NE	4	1.28
	SB	L	11	NE-SE	10	0.31	37	NE-SE	30	1.21
		R	15	NE-NW	15	0.00	116	NE-NW	85	3.09
	Intersection		**2132**	**All**	**2081**	**1.11**	**2009**	**All**	**1798**	**4.84**
Node 14: Int. Nebraska (N-S) Ave & AU Parking Lot	NB	T	1250	SW-NE	1218	0.91	1114	SW-NE	1126	0.36
		R	4	SW-E	3	0.53	3	SW-E	3	0.00
	WB	R	18	SE-NE	18	0.00	69	SE-NE	69	0.00
	Intersection		**1272**	**All**	**1239**	**0.93**	**1186**	**All**	**1198**	**0.35**
Node 15: Int. Nebraska (N-S) Ave & New Mexico Ave	EB	L	0	NW-NE	0		12	NW-NE	11	0.29
		T	3	NW-SE	3	0.00	10	NW-SE	10	0.00
		R	2	NW-SW	2	0.00	26	NW-SW	26	0.00
	WB	L	74	SE-SW	73	0.12	95	SE-SW	95	0.00
		T	8	SE-NW	8	0.00	9	SE-NW	8	0.34
		R	270	SE-NE	261	0.55	280	SE-NE	281	0.06
	NB	L	1	SW-NW	1	0.00	4	SW-NW	4	0.00
		T	984	SW-NE	979	0.16	825	SW-NE	836	0.38
		R	40	SW-SE	38	0.32	45	SW-SE	46	0.15
	SB	L	362	NE-SE	357	0.26	319	NE-SE	310	0.51
		T	911	NE-SW	904	0.23	951	NE-SW	938	0.42
		R	19	NE-NW	20	0.23	20	NE-NW	19	0.23
	Intersection		**2674**	**All**	**2646**	**0.54**	**2596**	**All**	**2584**	**0.24**
Node 17: Int. Massachusetts (E-W) Ave & Berkshire Apts	EB	T	1206	NW-SE	1206	0.00	810	NW-SE	800	0.35
	WB	T	848	SE-NW	852	0.14	1038	SE-NW	906	4.23
	SB	L	14	NE-SE	15	0.26	23	NE-SE	23	0.00
		R	11	NE-NW	11	0.00	19	NE-NW	19	0.00
	Intersection		**2079**	**All**	**2084**	**0.11**	**1890**	**All**	**1748**	**3.33**
Node 18: Int. Massachusetts (E-W) Ave (East End of Ward Circle)	WB	R	823	S-N	821	0.07	1166	S-N	1059	3.21
	NB	T	157	SW-N	155	0.16	222	SW-N	215	0.47
		R	1221	W-E	1202	0.55	773	W-E	773	0.00
	Intersection		**2201**	**All**	**2178**	**0.49**	**2161**	**All**	**2047**	**2.49**
Node 19: Int. Massachusetts (E-W) Ave (West End of Ward Circle)	EB	R	1313	N-S	1307	0.17	863	N-S	875	0.41
	SB	T	58	NE-S	56	0.26	86	NE-S	88	0.21
		R	698	E-W	705	0.26	1164	E-W	1007	4.77
	Intersection		**2069**	**All**	**2068**	**0.02**	**2113**	**All**	**1970**	**3.16**

2013 Ward Circle NW Existing Traffic Volumes GEH Results

(Massachusetts Ave assumed E-W direction, Nebraska Ave assumed N-S direction)

			AM Peak Hour				PM Peak Hour			
			Volume			GEH	Volume			GEH
Intersection	Approach	Movement	Balanced	Direction	Simulated	GEH <5.0	Balanced	Direction	Simulated	GEH <5.0
Node 20: Int. Nebraska (N-S) Ave (South End of Ward Circle)	EB	L	68	N-NE	80	1.39	81	N-NE	91	1.08
		T	1056	N-E	1032	0.74	631	N-E	629	0.08
		R	247	N-SW	240	0.45	237	N-SW	238	0.06
	NB	T	946	SW-NE	913	1.08	819	SW-NE	844	0.87
		R	322	SW-E	321	0.06	364	SW-E	357	0.37
	SB	T	1045	N-SW	1058	0.40	1053	N-SW	1029	0.74
	Intersection		**3684**	**All**	**3644**	**0.66**	**3185**	**All**	**3188**	**0.05**
Node 21: Int. Nebraska (N-S) Ave (North End of Ward Circle)	WB	L	183	S-NE	184	0.07	186	S-NE	153	2.53
		T	641	S-W	634	0.28	1097	S-W	997	3.09
		R	156	S-SW	161	0.40	105	S-SW	84	2.16
	NB	T	1014	S-NE	982	1.01	900	S-NE	928	0.93
	SB	T	862	NE-SW	878	0.54	867	NE-SW	883	0.54
		R	115	NE-W	123	0.73	153	NE-W	163	0.80
	Intersection		**2971**	**All**	**2962**	**0.17**	**3308**	**All**	**3208**	**1.75**
Node 29: Int. Nebraska (N-S) Ave and DHS (North Driveway) /Church Driveway	EB	L	8	NW-NE	8	0.00	0	NW-NE	0	
		R	0	NW-SW	0	0.00	3	NW-SW	3	0.00
	WB	L	0	SE-SW	0	0.00	9	SE-SW	9	0.00
		R	1	SE-NE	1	0.00	42	SE-NE	42	0.00
	NB	L	0	SW-NW	0		1	SW-NW	1	0.00
		T	1068	SW-NE	1043	0.77	1003	SW-NE	1009	0.19
		R	102	SW-SE	99	0.30	1	SW-SE	1	0.00
	SB	L	55	NE-SE	55	0.00	12	NE-SE	12	0.00
		T	977	NE-SW	1003	0.83	1008	NE-SW	1031	0.72
		R	0	NE-NW	0	0.00	2	NE-NW	2	0.00
	Intersection		**2211**	**All**	**2209**	**0.04**	**2081**	**All**	**2110**	**0.63**
Node 34: Nebraska (N-S) Ave & DHS (South Driveway)	NB	T	1170	SW-NE	1143	0.79	1005	SW-NE	1012	0.22
	SB	T	977	NE-SW	1004	0.86	1020	NE-SW	1042	0.69
	Intersection		**2147**	**All**	**2147**	**0.00**	**2025**	**All**	**2054**	**0.64**

2013 Ward Circle NW Existing Traffic Volumes, Delay and Level of Service (LOS)

(Massachusetts Ave assumed E-W direction, Nebraska Ave assumed N-S direction)

			AM Peak Hour					PM Peak Hour				
			Delay (s)		Queue Length (ft)			Delay (s)		Queue Length (ft)		
Intersection	Approach	Movement	Stopped	Average	Average	Maximum	LOS	Stopped	Average	Average	Maximum	LOS
Node 12: Int. Massachusetts (E-W) & AU Driveway	NB	L	32.0	36.8	5.0	42.5	D	26.0	31.4	15.0	148.3	C
		T	26.6	29.5	5.0	42.5	C	16.9	22.4	15.0	148.3	C
		R	37.5	48.0	10.4	87.7	D	29.5	38.8	12.7	105.1	D
	SB	L	14.3	28.2	3.2	64.6	C	22.7	30.9	14.9	72.6	C
		T	30.0	35.9	3.2	64.6	D	19.8	25.2	14.9	72.6	C
		R	27.3	32.5	3.2	64.6	C	19.2	22.8	14.9	72.6	C
	EB	L	23.4	42.0	81.5	451.6	D	13.2	20.4	31.7	265.1	C
		T	14.4	24.7	81.5	451.6	C	6.7	11.1	31.7	265.1	B
		R	14.9	23.8	81.5	451.6	C	7.0	10.8	31.7	265.1	B
	WB	L	17.7	31.7	57.7	346.3	C	19.0	31.4	99.4	386.6	C
		T	15.5	24.8	57.7	346.3	C	18.5	28.2	99.4	386.6	C
		R	17.4	26.9	57.7	346.3	C	18.9	28.0	99.4	386.6	C
	Intersection		**15.6**	**25.5**	**37.3**	**451.6**	**C**	**14.5**	**21.7**	**40.1**	**386.6**	**C**
Node 13: Int. Massachusetts (E-W) Ave & DHS Driveway	EB	L	0.0	0.0	0.8	179.0	D	0.0	0.0	0.1	41.0	D
		T	0.1	0.9	0.8	179.0	A	0.1	0.7	0.1	41.0	A
	WB	T	0.1	1.2	0.3	80.7	A	27.5	68.2	332.3	659.5	E
		R	0.0	0.8	0.3	80.7	A	41.8	80.7	332.3	659.5	F
	SB	L	2.2	4.4	0.0	0.0	A	43.1	59.2	1.1	64.1	E
		R	0.4	2.4	0.0	0.0	A	187.7	229.1	100.2	175.8	F
	Intersection		**0.1**	**1.0**	**0.4**	**179.0**	**A**	**23.6**	**46.5**	**127.7**	**659.5**	**D**
Node 14: Int. Nebraska (N-S) Ave & AU Parking Lot	NB	T	15.4	27.4	74.1	337.7	C	0.3	3.0	0.4	105.4	A
		R	13.9	26.8	74.1	337.7	C	0.0	1.1	0.4	105.4	A
	WB	R	10.4	12.6	0.2	23.3	B	0.7	1.4	0.1	23.1	A
	Intersection		**15.3**	**27.2**	**49.5**	**337.7**	**C**	**0.4**	**2.9**	**0.3**	**105.4**	**A**
Node 15: Int. Nebraska (N-S) Ave & New Mexico Ave	EB	L	0.0	0.0	2.2	28.9	A	33.1	38.6	11.4	65.3	D
		T	69.8	76.4	2.2	28.9	E	42.8	48.8	11.4	65.3	D
		R	78.3	83.9	2.2	28.9	F	39.1	44.0	11.4	65.3	D
	WB	L	32.0	38.0	16.5	113.4	D	33.9	40.7	22.6	133.3	D
		T	22.7	28.1	16.5	113.4	C	15.0	20.5	22.6	133.3	C
		R	20.6	30.7	39.6	253.1	C	22.0	33.7	52.2	218.1	C
	NB	L	0.0	1.3	102.3	403.3	A	0.0	0.3	52.5	309.2	A
		T	19.9	30.3	102.3	403.3	C	13.1	18.7	52.5	309.2	B
		R	12.7	20.6	102.3	403.3	C	10.1	14.5	52.5	309.2	B
	SB	L	21.9	37.9	72.3	671.3	D	14.2	23.8	92.1	828.1	C
		T	8.1	16.6	72.3	671.3	B	9.5	15.6	92.1	828.1	B
		R	6.1	12.7	72.3	671.3	B	12.0	19.2	92.1	828.1	B
	Intersection		**16.4**	**26.7**	**50.3**	**671.3**	**C**	**14.1**	**21.0**	**47.1**	**828.1**	**C**
Node 17: Int. Massachusetts (E-W) Ave & Berkshire Apts	EB	T	2.9	7.0	29.0	396.6	A	0.6	2.0	3.4	125.7	A
	WB	T	1.2	3.0	6.7	182.8	A	22.9	57.8	182.3	385.8	E
	SB	L	32.6	36.8	2.7	48.0	D	44.5	49.6	6.3	72.5	D
		R	30.6	35.0	2.1	50.0	C	33.1	43.0	3.5	62.1	D
	Intersection		**2.6**	**5.7**	**10.1**	**396.6**	**A**	**13.1**	**32.0**	**48.9**	**385.8**	**C**
Node 18: Int. Massachusetts (E-W) Ave (East End of Ward Circle)	WB	R	1.7	3.1	0.1	33.2	A	5.5	7.9	6.3	61.3	A
	NB	T	4.5	7.7	1.6	108.2	A	21.1	28.3	23.1	259.9	C
		R	1.3	2.5	38.8	267.0	A	3.5	5.3	36.6	251.7	A
	Intersection		**1.7**	**3.2**	**0.3**	**108.2**	**A**	**7.8**	**10.8**	**7.0**	**259.9**	**B**
Node 19: Int. Massachusetts (E-W) Ave (West End of Ward Circle)	EB	R	7.0	9.9	5.1	62.8	A	3.2	5.5	2.0	58.9	A
	SB	T	15.1	20.1	1.0	64.5	C	5.0	7.5	0.1	69.4	A

2013 Ward Circle NW Existing Traffic Volumes, Delay and Level of Service (LOS)

(Massachusetts Ave assumed E-W direction, Nebraska Ave assumed N-S direction)

Intersection	Approach	Movement	AM Peak Hour					PM Peak Hour				
			Delay (s)		Queue Length (ft)			Delay (s)		Queue Length (ft)		
			Stopped	Average	Average	Maximum	LOS	Stopped	Average	Average	Maximum	LOS
	SB	R	0.2	0.7	2.3	163.6	A	1.4	3.3	27.9	266.7	A
	Intersection		**6.1**	**8.7**	**2.4**	**64.5**	**A**	**2.7**	**4.7**	**1.0**	**69.4**	**A**
Node 20: Int. Nebraska (N-S) Ave (South End of Ward Circle)	EB	L	13.8	18.1	6.6	127.8	B	13.5	18.5	6.3	71.3	B
		T	13.3	21.8	74.6	188.1	C	16.4	25.0	42.1	167.1	C
		R	11.5	15.6	21.5	189.3	B	11.7	20.7	20.5	187.1	C
	NB	T	42.9	55.3	272.3	467.2	E	20.2	27.8	117.1	439.2	C
		R	35.9	49.0	272.3	467.2	D	27.7	38.6	117.1	439.2	D
	SB	T	15.4	18.8	88.1	341.1	B	11.9	14.8	58.9	308.6	B
	Intersection		**23.1**	**31.0**	**85.4**	**467.2**	**C**	**16.7**	**23.4**	**55.0**	**439.2**	**C**
Node 21: Int. Nebraska (N-S) Ave (North End of Ward Circle)	WB	L	27.0	33.4	19.8	126.5	C	20.9	26.2	17.8	147.8	C
		T	13.3	17.5	39.4	173.8	B	13.8	20.5	66.2	172.6	C
		R	11.7	15.1	14.1	196.8	B	16.5	19.8	9.7	189.6	B
	NB	T	10.0	12.4	46.5	327.1	B	12.7	14.9	50.6	290.7	B
	SB	T	24.4	33.0	122.9	278.3	C	20.8	27.8	109.8	274.1	C
		R	20.6	28.6	122.9	278.3	C	19.8	26.6	109.8	274.1	C
	Intersection		**16.5**	**21.6**	**47.9**	**327.1**	**C**	**16.1**	**21.3**	**51.0**	**290.7**	**C**
Node 29: Int. Nebraska (N-S) Ave and DHS (North Driveway) /Church Driveway	EB	L	3.5	7.8	1.2	64.7	A	0.0	0.0	0.0	0.0	A
		R	0.0	0.0	0.3	44.0	A	0.1	3.6	1.1	29.5	A
	WB	L	0.0	0.0	0.3	44.0	A	10.7	19.1	1.1	29.5	B
		R	0.1	4.7	0.0	0.0	A	0.2	4.8	0.0	0.0	A
	NB	L	0.0	0.0	4.2	309.7	A	24.6	31.4	6.2	271.1	C
		T	1.3	4.1	1.2	64.7	A	1.3	6.1	0.8	30.0	A
		R	1.5	4.4	4.2	309.6	A	0.0	14.5	6.2	271.0	B
	SB	L	10.7	20.0	37.0	358.1	B	4.4	11.3	5.5	174.3	B
		T	5.3	13.6	0.3	44.0	B	0.8	4.7	1.1	29.5	A
		R	0.0	0.0	37.0	358.1	A	0.0	2.2	5.5	174.3	A
	Intersection		**3.4**	**8.9**	**8.6**	**358.1**	**A**	**1.1**	**5.5**	**2.8**	**271.1**	**A**
Node 34: Nebraska (N-S) Ave & DHS (South Driveway)	NB	T	0.9	2.5	3.5	159.4	A	0.5	1.9	0.4	76.5	A
	SB	T	13.7	22.7	53.8	315.8	C	5.1	10.2	11.4	249.1	B
	Intersection		**6.9**	**11.9**	**19.1**	**315.8**	**B**	**2.8**	**6.1**	**3.9**	**249.1**	**A**

2013 Ward Circle NW Alternative 1 Traffic Volumes, Delay and Level of Service (LOS)

(Massachusetts Ave assumed E-W direction, Nebraska Ave assumed N-S direction)

Intersection	Approach	Movement	AM Peak Hour									PM Peak Hour								
			Volume				Delay (s)		Queue Length (ft)		LOS	Volume				Delay (s)		Queue Length (ft)		LOS
			Balanced	Direction	Simulated	GEH <5.0	Stopped	Average	Average	Maximum		Balanced	Direction	Simulated	GEH <5.0	Stopped	Average	Average	Maximum	
Node 12: Int. Massachusetts (E-W) Ave & AU Driveway	NB	L	25	SW-NW	25	0.0	33.6	38.6	5.2	42.5	D	84	SW-NW	83	0.11	29.8	35.5	16.5	148.2	D
		T	2	SW-NE	2	0.0	27.6	30.5	5.2	42.5	C	9	SW-NE	9	0.00	20.2	26.1	16.5	148.2	C
		R	32	SW-SE	40	1.3	111.3	130.2	15.3	88.4	F	59	SW-SE	69	1.25	205.4	240.8	86.7	214.9	F
	SB	L	1	NE-SE	1	0.0	44.9	56.0	3.8	64.6	E	51	NE-SE	53	0.28	56.6	68.7	20.7	71.9	E
		T	14	NE-SW	14	0.0	36.9	43.0	3.8	64.6	D	24	NE-SW	24	0.00	26.6	31.8	20.7	71.9	C
		R	4	NE-NW	4	0.0	29.3	34.5	3.8	64.6	C	33	NE-NW	33	0.00	32.1	37.7	20.7	71.9	D
	EB	L	9	NW-NE	2	3.0	156.7	194.6	415.3	518.0	F	27	NW-NE	15	2.62	108.2	146.5	410.2	484.1	F
		T	1280	NW-SE	325	33.7	241.3	296.7	415.3	518.0	F	753	NW-SE	371	16.11	180.7	232.2	410.2	484.1	F
		R	56	NW-SW	12	7.5	328.5	391.2	415.3	518.0	F	100	NW-SW	47	6.18	192.5	247.5	410.2	484.1	F
	WB	L	7	SE-SW	9	0.7	38.0	49.6	16.3	133.7	D	26	SE-SW	18	1.71	61.6	71.6	38.9	194.9	E
		T	638	SE-NW	427	9.1	6.0	9.3	16.3	133.7	A	1087	SE-NW	595	16.97	10.3	16.3	38.9	194.9	B
		R	53	SE-NE	35	2.7	3.1	6.0	16.3	133.7	A	51	SE-NE	36	2.27	12.7	21.7	38.9	194.9	C
	Intersection		2121	All	896	31.5	102.4	126.3	111.0	518.0	F	2304	All	1353	22.24	79.0	101.4	127.4	484.1	F
Node 13: Int. Massachusetts (E-W) Ave & DHS Driveway	EB	L	26	NW-NE		7.2					D	26	NW-NE		7.21					D
		T	1221	NW-SE	475	25.6	0.0	0.1	0.0	0.0	A	773	NW-SE	492	11.17	0.0	0.1	0.0	0.0	A
	WB	T	808	SE-NW	437	14.9	153.4	210.6	570.6	683.7	F	1050	SE-NW	452	21.82	164.7	219.4	581.7	683.5	F
		R	51	SE-NE	32	2.9	172.3	228.5	570.6	683.7	F	7	SE-NE	3	1.79	246.1	303.8	581.7	683.5	F
	SB	L	11	NE-SE	10	0.3	25.6	30.7	0.0	0.0	C	37	NE-SE	33	0.68	111.7	128.4	0.1	52.3	F
		R	15	NE-NW	15	0.0	77.0	87.2	0.0	0.0	F	116	NE-NW	103	1.24	208.0	251.2	100.7	156.1	F
	Intersection		2132	All	969	29.5	76.3	104.3	190.2	683.7	F	2009	All	1083	23.55	92.6	120.3	210.7	683.5	F
Node 14: Int. Nebraska (N-S) Ave & AU Parking Lot		T	1250	SW-NE	1124	3.7	29.1	46.4	105.8	357.3	D	1114	SW-NE	1032	2.50	45.0	69.5	158.2	392.7	E
	NB	R	4	SW-E	1	1.9	0.0	9.3	105.8	357.3	A	3	SW-E	3	0.00	37.4	60.8	158.2	392.7	E
	WB	R	18	SE-NE	18	0.0	9.7	13.7	0.1	29.4	B	69	SE-NE	69	0.00	13.5	18.1	0.6	71.7	B
	Intersection		1272	All	1143	3.7	28.8	45.9	70.6	357.3	D	1186	All	1104	2.42	43.1	66.2	105.6	392.7	E
Node 15: Int. Nebraska (N-S) Ave & New Mexico Ave	EB	L	0	NW-NE	0		0.0	0.0	2.0	29.1	A	12	NW-NE	11	0.29	35.9	43.3	12.2	65.6	D
		T	3	NW-SE	3	0.0	61.8	68.4	2.0	29.1	E	10	NW-SE	10	0.00	45.6	52.0	12.2	65.6	D
		R	2	NW-SW	2	0.0	70.4	75.9	2.0	29.1	E	26	NW-SW	26	0.00	41.8	46.9	12.2	65.6	D
	WB	L	74	SE-SW	73	0.1	29.2	35.0	15.0	117.8	C	95	SE-SW	75	2.17	49.9	61.0	18.6	145.4	E
		T	8	SE-NW	8	0.0	17.7	23.5	15.0	117.8	C	9	SE-NW	6	1.10	33.9	44.1	18.6	145.4	D
		R	270	SE-NE	269	0.1	19.0	30.6	44.9	255.7	C	280	SE-NE	193	5.66	152.7	190.4	249.0	443.5	F
	NB	L	1	SW-NW	1	0.0	52.3	78.7	267.1	445.8	E	4	SW-NW	4	0.00	25.3	38.6	132.4	405.1	D
		T	984	SW-NE	859	4.1	60.9	85.7	267.1	445.8	F	825	SW-NE	831	0.21	33.3	54.1	132.4	405.1	D
		R	40	SW-SE	35	0.8	57.2	80.1	267.1	445.8	F	45	SW-SE	46	0.15	39.7	61.1	132.4	405.1	E
	SB	L	362	NE-SE	258	5.9	15.0	20.7	12.0	178.9	C	319	NE-SE	183	8.58	30.1	45.3	31.7	268.3	D
		T	911	NE-SW	647	9.5	1.6	3.5	12.0	178.9	A	951	NE-SW	583	13.29	5.5	11.1	31.7	268.3	B
		R	19	NE-NW	15	1.0	0.0	0.7	12.0	178.9	A	20	NE-NW	11	2.29	5.4	10.4	31.7	268.3	B
	Intersection		2674	All	2170	10.2	30.9	44.0	76.5	445.8	D	2596	All	1979	12.90	37.3	53.9	67.9	443.5	D
Node 17: Int. Massachusetts (E-W) Ave & Berkshire Apts	EB	T	1206	NW-SE	487	24.7	0.6	0.9	4.3	74.6	A	810	NW-SE	525	11.03	0.5	1.6	2.5	71.6	A
	WB	T	848	SE-NW	451	15.6	157.5	223.3	334.3	393.2	F	1038	SE-NW	440	22.00	160.0	236.8	343.7	394.8	F
	SB	L	14	NE-SE	14	0.0	27.2	33.1	2.6	48.0	C	23	NE-SE	21	0.43	89.6	100.2	9.7	72.5	F
		R	11	NE-NW	11	0.0	39.9	51.0	2.1	50.0	D	19	NE-NW	19	0.00	84.4	98.5	5.1	51.6	F
	Intersection		2079	All	963	28.6	74.9	106.1	85.8	393.2	F	1890	All	1005	23.26	73.8	108.5	90.2	394.8	F
Node 18: Int. Massachusetts (E-W) Ave (East End of Ward Circle)	Intersection		980	All	1473	14.1	0.0	0.3	0.0	0.0	A	1388	All	1587	5.16	0.0	0.4	0.0	0.0	A
Node 19: Int. Massachusetts (E-W) Ave (West End of Ward Circle)	Intersection		1371	All	1288	2.3	0.0	0.4	0.2	25.8	A	949	All	1202	7.71	0.0	0.4	0.0	23.6	A
Node 20: Int. Nebraska (N-S) Ave (South End of Ward Circle)	Intersection		3684	All	2429	22.7	24.0	30.2	107.5	456.6	C	3185	All	2301	16.88	25.6	32.2	108.3	455.1	C
Node 21: Int. Nebraska (N-S) Ave (North End of Ward Circle)	Intersection		2971	All	2356	11.9	15.2	18.8	54.6	276.1	B	3308	All	2250	20.07	17.5	22.5	59.1	275.9	C

2013 Ward Circle NW Alternative 1 Traffic Volumes, Delay and Level of Service (LOS)

(Massachusetts Ave assumed E-W direction, Nebraska Ave assumed N-S direction)

Intersection	Approach	Movement	AM Peak Hour									PM Peak Hour								
			Volume				Delay (s)		Queue Length (ft)		LOS	Volume				Delay (s)		Queue Length (ft)		LOS
			Balanced	Direction	Simulated	GEH <5.0	Stopped	Average	Average	Maximum		Balanced	Direction	Simulated	GEH <5.0	Stopped	Average	Average	Maximum	
Node 29: Int. Nebraska (N-S) Ave and DHS (North Driveway) /Church Driveway	EB	L	8	NW-NE	8	0.0	6.0	10.0	0.7	29.5	A	0	NW-NE	0		0.0	0.0	1.7	136.1	A
		R	0	NW-SW	0	0.0	0.0	0.0	1.5	84.5	A	3	NW-SW	3	0.00	19.4	27.3	1.8	42.3	C
	WB	L	0	SE-SW	0	0.0	0.0	0.0	1.5	84.5	A	9	SE-SW	10	0.00	69.6	81.6	1.8	42.3	F
		R	1	SE-NE	1	0.0	0.1	4.4	0.0	0.0	A	42	SE-NE	42	0.00	0.4	5.0	0.0	0.0	A
	NB	L	0	SW-NW	0		0.0	0.0	2.4	143.1	A	1	SW-NW	1	0.00	0.0	5.1	7.9	231.6	A
		T	1068	SW-NE	861	6.7	0.8	3.8	0.7	29.5	A	1003	SW-NE	873	4.24	2.5	8.2	1.7	136.1	A
		R	102	SW-SE	88	1.4	0.9	3.4	2.4	142.9	A	1	SW-SE	1	0.00	0.0	1.7	9.2	286.7	A
	SB	L	55	NE-SE	45	1.4	35.2	67.4	252.4	428.3	E	12	NE-SE	5	2.40	75.6	132.2	300.5	431.6	F
		T	977	NE-SW	875	3.4	43.8	82.8	1.5	84.5	F	1008	NE-SW	645	12.63	79.4	136.2	1.8	42.3	F
		R	0	NE-NW	0	0.0	0.0	0.0	252.4	428.3	A	2	NE-NW	1	0.00	38.8	86.0	300.5	431.6	F
	Intersection		**2211**	**All**	**1878**	**7.4**	**21.7**	**42.1**	**51.6**	**428.3**	**D**	**2081**	**All**	**1581**	**11.68**	**34.6**	**61.3**	**62.7**	**431.6**	**E**
Node 34: Nebraska (N-S) Ave & DHS (South Driveway)	NB	T	1170	SW-NE	954	6.6	0.2	1.7	0.5	46.1	A	1005	SW-NE	879	4.11	0.1	1.1	0.0	23.0	A
	SB	T	977	NE-SW	881	3.1	60.3	79.4	155.8	317.6	E	1020	NE-SW	661	12.38	90.1	114.7	202.9	322.6	F
	Intersection		**2147**	**All**	**1835**	**7.0**	**29.1**	**39.0**	**52.1**	**317.6**	**D**	**2025**	**All**	**1540**	**11.49**	**38.7**	**49.8**	**67.6**	**322.6**	**D**

2013 Ward Circle NW Alternative 2 Traffic Volumes, Delay and Level of Service (LOS)

(Massachusetts Ave assumed E-W direction, Nebraska Ave assumed N-S direction)

			AM Peak Hour									PM Peak Hour								
			Volume				Delay (s)		Queue Length (ft)			Volume				Delay (s)		Queue Length (ft)		
Intersection	Approach	Movement	Balanced	Direction	Simulated	GEH <5.0	Stopped	Average	Average	Maximum	LOS	Balanced	Direction	Simulated	GEH <5.0	Stopped	Average	Average	Maximum	LOS
Node 12: Int. Massachusetts (E-W) Ave & AU Driveway	NB	L	25	SW-NW	25	0.0	33.5	38.6	5.2	42.5	D	84	SW-NW	83	0.1	29.5	35.2	17.0	148.3	D
		T	2	SW-NE	2	0.0	27.6	30.5	5.2	42.5	C	9	SW-NE	9	0.0	20.2	25.7	17.0	148.3	C
		R	32	SW-SE	38	1.0	100.1	116.9	17.7	109.4	F	59	SW-SE	65	0.8	32.9	43.2	14.7	105.1	D
	SB	L	1	NE-SE	1	0.0	44.1	56.5	3.8	64.6	E	51	NE-SE	51	0.0	25.7	34.3	17.2	72.6	C
		T	14	NE-SW	14	0.0	36.9	43.0	3.8	64.6	D	24	NE-SW	24	0.0	22.9	28.5	17.2	72.6	C
		R	4	NE-NW	4	0.0	29.3	34.6	3.8	64.6	C	33	NE-NW	34	0.2	23.5	27.6	17.2	72.6	C
	EB	L	9	NW-NE	5	1.5	54.0	79.0	291.1	523.1	E	27	NW-NE	28	0.2	8.1	15.5	25.9	266.8	B
		T	1280	NW-SE	845	13.3	80.2	106.8	291.1	523.1	F	753	NW-SE	757	0.1	5.3	10.1	25.9	266.8	B
		R	56	NW-SW	34	3.3	70.4	94.3	291.1	523.1	F	100	NW-SW	100	0.0	5.4	9.1	25.9	266.8	A
	WB	L	7	SE-SW	13	1.9	54.1	65.3	8.1	212.6	E	26	SE-SW	30	0.8	20.2	31.5	48.7	272.2	C
		T	638	SE-NW	630	0.3	3.7	6.7	8.1	212.6	A	1087	SE-NW	946	4.4	10.1	15.3	48.7	272.2	B
		R	53	SE-NE	48	0.7	4.1	8.6	8.1	212.6	A	51	SE-NE	44	1.0	7.6	13.2	48.7	272.2	B
	Intersection		**2121**	**All**	**1659**	**10.6**	**47.6**	**63.7**	**78.1**	**523.1**	**E**	**2304**	**All**	**2171**	**2.8**	**10.5**	**15.8**	**27.0**	**272.2**	**B**
Node 13: Int. Massachusetts (E-W) Ave & DHS Driveway	EB	L	26	NW-NE		7.2					D	26	NW-NE		7.2					D
		T	1221	NW-SE	880	10.5	0.0	0.4	0.0	0.0	A	773	NW-SE	740	1.2	0.0	0.3	0.0	0.0	A
	WB	T	808	SE-NW	806	0.1	14.6	21.7	37.5	360.0	C	1050	SE-NW	982	2.1	57.5	78.3	315.7	656.9	E
		R	51	SE-NE	51	0.0	6.6	10.4	37.5	360.0	B	7	SE-NE	6	0.4	43.6	57.7	315.7	656.9	E
	SB	L	11	NE-SE	10	0.3	19.4	28.8	0.0	0.0	C	37	NE-SE	13	4.8	218.9	242.5	0.0	22.9	F
		R	15	NE-NW	15	0.0	11.8	15.3	0.0	0.0	B	116	NE-NW	33	9.6	816.4	886.8	119.6	177.1	F
	Intersection		**2132**	**All**	**1762**	**8.4**	**7.1**	**10.7**	**12.5**	**360.0**	**B**	**2009**	**All**	**1774**	**5.4**	**48.8**	**61.9**	**125.2**	**656.9**	**E**
Node 14: Int. Nebraska (N-S) Ave & AU Parking Lot	NB	T	1250	SW-NE	878	11.4	47.8	72.9	196.9	385.2	E	1114	SW-NE	969	4.5	49.4	76.5	172.9	321.0	E
		R	4	SW-E	2	1.2	69.0	113.5	196.9	385.2	F	3	SW-E	3	0.0	49.3	78.0	172.9	321.0	E
	WB	R	18	SE-NE	18	0.0	15.9	24.1	0.0	25.4	C	69	SE-NE	69	0.0	16.5	21.1	0.8	29.7	C
	Intersection		**1272**	**All**	**898**	**11.4**	**47.3**	**72.0**	**131.3**	**385.2**	**E**	**1186**	**All**	**1041**	**4.3**	**47.3**	**72.8**	**115.5**	**321.0**	**E**
Node 15: Int. Nebraska (N-S) Ave & New Mexico Ave	EB	L	0	NW-NE	0		0.0	0.0	2.0	29.0	A	12	NW-NE	11	0.3	38.1	45.1	12.2	65.7	D
		T	3	NW-SE	3	0.0	61.8	68.4	2.0	29.0	E	10	NW-SE	10	0.0	45.5	51.6	12.2	65.7	D
		R	2	NW-SW	2	0.0	70.4	75.9	2.0	29.0	E	26	NW-SW	26	0.0	41.8	46.8	12.2	65.7	D
	WB	L	74	SE-SW	73	0.1	29.2	35.3	15.0	117.9	D	95	SE-SW	48	5.6	49.0	61.6	13.2	141.2	E
		T	8	SE-NW	8	0.0	17.7	23.2	15.0	117.9	C	9	SE-NW	5	1.5	56.4	72.6	13.2	141.2	E
		R	270	SE-NE	272	0.1	23.8	39.2	41.8	259.6	D	280	SE-NE	126	10.8	302.9	369.2	324.6	455.0	F
	NB	L	1	SW-NW	1	0.0	49.9	79.1	350.8	438.2	E	4	SW-NW	4	0.0	13.1	19.9	66.6	321.8	B
		T	984	SW-NE	605	13.4	107.4	145.9	350.8	438.2	F	825	SW-NE	831	0.2	16.9	26.6	66.6	321.8	C
		R	40	SW-SE	19	3.9	103.9	143.1	350.8	438.2	F	45	SW-SE	46	0.1	13.8	20.8	66.6	321.8	C
	SB	L	362	NE-SE	324	2.1	5.4	10.4	10.9	328.9	B	319	NE-SE	269	2.9	13.7	25.3	44.9	351.0	C
		T	911	NE-SW	821	3.1	0.6	3.7	10.9	328.9	A	951	NE-SW	829	4.1	6.0	12.8	44.9	351.0	B
		R	19	NE-NW	16	0.7	0.2	2.6	10.9	328.9	A	20	NE-NW	18	0.5	4.2	7.7	44.9	351.0	A
	Intersection		**2674**	**All**	**2144**	**10.8**	**36.5**	**51.9**	**96.9**	**438.2**	**D**	**2596**	**All**	**2223**	**7.6**	**29.8**	**41.7**	**60.2**	**455.0**	**D**
Node 17: Int. Massachusetts (E-W) Ave & Berkshire Apts	EB	T	1206	NW-SE	888	9.8	3.7	6.8	17.4	202.0	A	810	NW-SE	753	2.0	4.2	8.2	17.1	225.6	A
	WB	T	848	SE-NW	852	0.1	1.4	3.4	7.5	185.9	A	1038	SE-NW	991	1.5	13.3	24.0	67.0	386.9	C
	SB	L	14	NE-SE	14	0.0	27.2	31.3	2.5	48.0	C	23	NE-SE	22	0.2	90.0	99.1	12.1	72.5	F
		R	11	NE-NW	11	0.0	28.9	33.3	2.0	50.0	C	19	NE-NW	19	0.0	35.8	43.0	3.6	46.5	D
	Intersection		**2079**	**All**	**1765**	**7.2**	**2.9**	**5.5**	**7.4**	**202.0**	**A**	**1890**	**All**	**1785**	**2.4**	**10.7**	**18.5**	**24.9**	**386.9**	**B**
Node 18: Int. Massachusetts (E-W) Ave (East End of Ward Circle)	**Intersection**		**980**	**All**	**813**	**5.6**	**0.7**	**1.7**	**0.0**	**29.3**	**A**	**1388**	**All**	**1015**	**10.8**	**1.5**	**2.8**	**0.3**	**52.3**	**A**
Node 19: Int. Massachusetts (E-W) Ave (West End of Ward Circle)	**Intersection**		**1371**	**All**	**882**	**14.6**	**1.8**	**2.8**	**0.0**	**29.4**	**A**	**949**	**All**	**879**	**2.3**	**0.1**	**0.8**	**0.0**	**25.5**	**A**

2013 Ward Circle NW Alternative 2 Traffic Volumes, Delay and Level of Service (LOS)

(Massachusetts Ave assumed E-W direction, Nebraska Ave assumed N-S direction)

			AM Peak Hour									PM Peak Hour								
			Volume				Delay (s)		Queue Length (ft)			Volume				Delay (s)		Queue Length (ft)		
Intersection	**Approach**	**Movement**	**Balanced**	**Direction**	**Simulated**	**GEH <5.0**	**Stopped**	**Average**	**Average**	**Maximum**	**LOS**	**Balanced**	**Direction**	**Simulated**	**GEH <5.0**	**Stopped**	**Average**	**Average**	**Maximum**	**LOS**
Node 20: Int. Nebraska (N-S) Ave (South End of Ward Circle)	**Intersection**		**3684**	**All**	**2836**	**14.9**	**38.1**	**47.2**	**125.4**	**467.3**	**D**	**3185**	**All**	**2861**	**5.9**	**35.5**	**43.9**	**114.3**	**467.2**	**D**
Node 21: Int. Nebraska (N-S) Ave (North End of Ward Circle)	**Intersection**		**2971**	**All**	**2549**	**8.0**	**25.2**	**31.4**	**58.8**	**275.5**	**C**	**3308**	**All**	**2865**	**8.0**	**28.9**	**35.5**	**73.7**	**335.4**	**D**
Node 29: Int. Nebraska (N-S) Ave and DHS (North Driveway) /Church Driveway	**EB**	**L**	8	NW-NE	8	0.0	3.7	7.7	0.6	26.7	A	0	NW-NE	0		0.0	0.0	1.3	30.5	A
		R	0	NW-SW	0	0.0	0.0	0.0	32.2	456.3	A	3	NW-SW	3	0.0	6.9	14.2	8.3	85.1	B
	WB	**L**	0	SE-SW	0	0.0	0.0	0.0	32.2	456.3	A	9	SE-SW	10	0.0	100.0	114.7	8.3	85.1	**F**
		R	1	SE-NE	1	0.0	0.1	4.4	0.0	0.0	A	42	SE-NE	42	0.0	0.1	4.6	0.0	0.0	A
	NB	**L**	0	SW-NW	0		0.0	0.0	1.7	197.2	A	1	SW-NW	1	0.0	0.0	2.6	6.7	243.8	A
		T	1068	SW-NE	725	**11.5**	0.6	2.6	0.6	26.7	A	1003	SW-NE	904	3.2	1.9	7.3	1.3	30.5	A
		R	102	SW-SE	64	4.2	0.0	2.3	1.7	197.1	A	1	SW-SE	0	1.4	0.0	0.0	6.6	243.7	A
	SB	**L**	55	NE-SE	53	0.3	8.3	20.2	68.3	379.5	C	12	NE-SE	7	1.6	33.7	74.3	262.9	431.8	**E**
		T	977	NE-SW	976	0.0	9.8	22.2	32.2	456.3	C	1008	NE-SW	835	5.7	46.1	90.6	8.3	85.1	**F**
		R	0	NE-NW	0	0.0	0.0	0.0	68.3	379.5	A	2	NE-NW	1	0.0	44.1	91.2	262.9	431.8	**F**
	Intersection		**2211**	**All**	**1827**	**8.5**	**5.7**	**13.6**	**23.8**	**456.3**	**B**	**2081**	**All**	**1803**	**6.3**	**23.0**	**46.7**	**56.6**	**431.8**	**D**
Node 34: Nebraska (N-S) Ave & DHS (South	**NB**	**T**	1170	SW-NE	789	**12.2**	0.1	0.5	0.0	45.0	A	1005	SW-NE	914	2.9	0.2	1.1	0.6	91.2	A
	SB	**T**	977	NE-SW	974	0.1	30.0	44.1	89.6	321.4	D	1020	NE-SW	848	5.6	59.5	81.5	171.2	315.8	**F**
	Intersection		**2147**	**All**	**1763**	**8.7**	**16.6**	**24.6**	**29.9**	**321.4**	**C**	**2025**	**All**	**1762**	**6.0**	**28.8**	**39.8**	**57.3**	**315.8**	**D**

2013 Ward Circle NW Alternative 3 Traffic Volumes, Delay and Level of Service (LOS)

(Massachusetts Ave assumed E-W direction, Nebraska Ave assumed N-S direction)

			AM Peak Hour									PM Peak Hour								
			Volume				Delay (s)		Queue Length (ft)			Volume				Delay (s)		Queue Length (ft)		
Intersection	Approach	Movement	Balanced	Direction	Simulated	GEH <5.0	Stopped	Average	Average	Maximum	LOS	Balanced	Direction	Simulated	GEH <5.0	Stopped	Average	Average	Maximum	LOS
Node 12: Int. Massachusetts (E-W) & AU Driveway	NB	L	25	SW-NW	25	0.0	29.9	34.3	5.0	41.6	C	84	SW-NW	83	0.1	26.7	33.1	16.1	148.3	C
		T	2	SW-NE	2	0.0	51.5	57.5	5.0	41.6	E	9	SW-NE	9	0.0	17.5	24.8	16.1	148.3	C
		R	32	SW-SE	37	0.9	36.6	46.5	10.0	86.7	D	59	SW-SE	65	0.8	29.4	38.1	13.0	127.5	D
	SB	L	1	NE-SE	1	0.0	74.3	83.0	3.5	64.6	F	51	NE-SE	51	0.0	21.9	29.8	14.9	71.7	C
		T	14	NE-SW	14	0.0	28.6	34.3	3.5	64.6	C	24	NE-SW	24	0.0	24.7	30.1	14.9	71.7	C
		R	4	NE-NW	4	0.0	25.8	31.5	3.5	64.6	C	33	NE-NW	33	0.0	17.9	21.7	14.9	71.7	C
	EB	L	9	NW-NE	9	0.0	8.6	15.1	37.3	295.0	B	27	NW-NE	28	0.2	14.6	22.4	28.4	230.0	C
		T	1280	NW-SE	1294	0.4	5.0	9.0	37.3	295.0	A	753	NW-SE	758	0.2	6.5	10.4	28.4	230.0	B
		R	56	NW-SW	56	0.0	4.6	8.7	37.3	295.0	A	100	NW-SW	100	0.0	6.8	10.4	28.4	230.0	B
	WB	L	7	SE-SW	14	2.2	17.6	27.6	10.1	163.0	C	26	SE-SW	30	0.8	4.4	12.5	27.8	204.2	B
		T	638	SE-NW	606	1.3	1.9	3.6	10.1	163.0	A	1087	SE-NW	1100	0.4	4.5	8.1	27.8	204.2	A
		R	53	SE-NE	49	0.6	2.4	4.1	10.1	163.0	A	51	SE-NE	50	0.1	11.9	18.1	27.8	204.2	B
	Intersection		2121	All	2111	0.2	5.2	8.7	14.4	295.0	A	2304	All	2331	0.6	7.8	12.1	21.5	230.0	B
Node 13: Int. Massachusetts (E-W) Ave & DHS Driveway	EB	L	26	NW-NE	1186	47.1	0.2	0.7	0.8	173.2	D	26	NW-NE	776	37.5	0.0	0.3	0.0	23.0	D
		T	1221	NW-SE	1186	1.0	0.2	0.7	0.8	173.2	A	773	NW-SE	776	0.1	0.0	0.3	0.0	23.0	A
	WB	T	808	SE-NW	810	0.1	0.0	0.5	0.0	0.0	A	1050	SE-NW	1051	0.0	0.0	1.4	0.1	29.6	A
		R	51	SE-NE	51	0.0	0.0	0.4	0.0	0.0	A	7	SE-NE	7	0.0	0.0	0.1	0.1	29.6	A
	SB	L	11	NE-SE	10	0.3	5.5	14.5	0.0	0.0	B	37	NE-SE	36	0.2	7.9	17.5	0.0	25.6	B
		R	15	NE-NW	15	0.0	0.4	2.7	0.0	0.0	A	116	NE-NW	116	0.0	0.9	3.3	0.0	23.6	A
	Intersection		2132	All	2072	1.3	0.2	0.7	0.3	173.2	A	2009	All	1986	0.5	0.2	1.3	0.0	29.6	A
Node 14: Int. Nebraska (N-S) Ave & AU Parking Lot	NB	T	1250	SW-NE	1065	5.4	23.7	48.7	139.8	390.1	D	1114	SW-NE	1120	0.2	4.7	11.0	28.0	335.1	B
		R	4	SW-E	1	1.9	0.0	0.4	139.8	390.1	A	3	SW-E	3	0.0	0.0	0.9	28.0	335.1	A
	WB	R	18	SE-NE	18	0.0	9.9	12.7	0.0	22.5	B	69	SE-NE	69	0.0	0.7	1.5	0.0	0.0	A
	Intersection		1272	All	1084	5.5	23.4	48.1	93.2	390.1	D	1186	All	1192	0.2	4.5	10.4	18.7	335.1	B
Node 15: Int. Nebraska (N-S) Ave & New Mexico Ave	EB	L	0	NW-NE	0		0.0	0.0	0.0	0.0	A	12	NW-NE	12	0.0	2.7	4.4	0.0	0.0	A
		T	3	NW-SE	3	0.0	90.7	98.5	1.4	24.9	F	10	NW-SE	9	0.3	48.6	55.0	3.5	55.0	D
		R	2	NW-SW	2	0.0	0.0	1.2	0.0	0.0	A	26	NW-SW	26	0.0	1.3	2.9	0.0	0.0	A
	WB	L	74	SE-SW	56	2.2	45.9	56.0	14.0	125.0	E	95	SE-SW	94	0.1	32.0	39.3	21.6	168.6	D
		T	8	SE-NW	8	0.0	28.7	36.6	14.0	125.0	D	9	SE-NW	9	0.0	30.0	38.1	21.6	168.6	D
		R	270	SE-NE	204	4.3	105.1	130.1	170.2	414.8	F	280	SE-NE	281	0.1	30.8	45.6	78.6	408.2	D
	NB	L	1	SW-NW	1	0.0	0.0	0.1	212.4	430.7	A	4	SW-NW	4	0.0	15.5	21.0	66.9	403.2	C
		T	984	SW-NE	879	3.4	41.2	62.8	212.4	430.7	E	825	SW-NE	830	0.2	16.0	23.7	66.9	403.2	C
		R	40	SW-SE	35	0.8	31.5	51.8	212.4	430.7	D	45	SW-SE	46	0.1	16.8	25.0	66.9	403.2	C
	SB	L	362	NE-SE	361	0.1	16.1	28.5	94.7	778.1	C	319	NE-SE	322	0.2	11.4	22.7	56.9	520.6	C
		T	911	NE-SW	913	0.1	5.4	13.3	94.7	778.1	B	951	NE-SW	968	0.5	5.9	13.2	56.9	520.6	B
		R	19	NE-NW	21	0.4	4.2	12.1	94.7	778.1	B	20	NE-NW	19	0.2	4.5	10.0	56.9	520.6	A
	Intersection		2674	All	2483	3.8	29.3	44.3	93.4	778.1	D	2596	All	2620	0.5	13.8	22.4	41.4	520.6	C
Node 17: Int. Massachusetts (E-W) Ave & Berkshire Apts	EB	T	1206	NW-SE	1195	0.3	0.6	1.4	3.7	122.6	A	810	NW-SE	806	0.1	0.5	1.0	3.1	230.3	A
	WB	T	848	SE-NW	852	0.1	1.7	4.1	8.9	181.3	A	1038	SE-NW	1041	0.1	2.0	4.7	13.1	183.8	A
	SB	L	14	NE-SE	14	0.0	30.3	34.4	2.7	48.0	C	23	NE-SE	23	0.0	43.9	48.2	6.0	72.5	D
		R	11	NE-NW	11	0.0	30.1	34.5	2.1	46.3	C	19	NE-NW	19	0.0	28.9	34.2	3.3	42.9	C
	Intersection		2079	All	2072	0.2	1.4	2.9	4.3	181.3	A	1890	All	1889	0.0	2.1	3.9	6.4	230.3	A
Node 29: Int. Nebraska (N-S) Ave and DHS (North Driveway) /Church Driveway	EB	L	8	NW-NE	8	0.0	5.5	10.1	1.5	84.4	B	0	NW-NE	0		0.0	0.0	1.1	43.9	A
		R	0	NW-SW	0	0.0	0.0	0.0	1.0	44.1	A	3	NW-SW	3	0.0	7.3	11.9	0.9	27.3	B
	WB	L	0	SE-SW	0	0.0	0.0	0.0	1.0	44.1	A	9	SE-SW	9	0.0	7.6	15.3	0.9	27.3	B
		R	1	SE-NE	1	0.0	0.1	4.4	0.0	0.0	A	42	SE-NE	42	0.0	0.2	5.0	0.0	23.4	A
	NB	L	0	SW-NW	0		0.0	0.0	7.7	276.3	A	1	SW-NW	1	0.0	6.6	13.4	5.3	194.5	B
		T	1068	SW-NE	974	2.9	1.2	5.8	1.5	84.4	A	1003	SW-NE	1026	0.7	1.3	5.7	1.1	43.9	A
		R	102	SW-SE	87	1.5	1.0	5.3	7.6	276.2	A	1	SW-SE	1	0.0	3.6	19.1	5.3	194.4	B
	SB	L	55	NE-SE	53	0.3	3.3	9.8	6.8	258.4	A	12	NE-SE	12	0.0	1.3	5.9	3.8	129.9	A
		T	977	NE-SW	997	0.6	0.8	4.7	1.0	44.1	A	1008	NE-SW	1028	0.6	0.6	3.8	0.9	27.3	A
		R	0	NE-NW	0	0.0	0.0	0.0	6.8	258.4	A	2	NE-NW	2	0.0	0.6	6.2	3.8	129.9	A
	Intersection		2211	All	2120	2.0	1.1	5.4	3.5	276.3	A	2081	All	2124	0.9	1.0	4.9	2.3	194.5	A

2013 Ward Circle NW Alternative 3 Traffic Volumes, Delay and Level of Service (LOS)

(Massachusetts Ave assumed E-W direction, Nebraska Ave assumed N-S direction)

			AM Peak Hour									PM Peak Hour								
			Volume				Delay (s)		Queue Length (ft)			Volume				Delay (s)		Queue Length (ft)		
Intersection	Approach	Movement	Balanced	Direction	Simulated	GEH <5.0	Stopped	Average	Average	Maximum	LOS	Balanced	Direction	Simulated	GEH <5.0	Stopped	Average	Average	Maximum	LOS
Node 34:	NB	T	1170	SW-NE	1059	3.3	0.1	1.2	0.7	156.6	A	1005	SW-NE	1025	0.6	0.2	1.0	1.1	174.6	A
Nebraska (N-S)	SB	T	977	NE-SW	1002	0.8	0.2	2.5	0.2	44.4	A	1020	NE-SW	1039	0.6	0.1	1.4	0.1	25.6	A
Ave & DHS (South	Intersection		2147	All	2061	1.9	0.2	1.8	0.3	156.6	A	2025	All	2064	0.9	0.2	1.2	0.4	174.6	A
		L	68		174	9.6	11.5	16.0	13.9	181.3	B	81		92	1.2	18.8	22.8	12.3	113.2	C
	EB	T	1056		909	4.7	8.2	10.2	38.6	180.8	B	545		550	0.2	16.7	20.2	44.3	187.6	C
		L	183		184	0.1	16.7	23.4	19.7	111.0	C	186		185	0.1	12.3	16.9	16.0	121.8	B
Node 19: Int.	WB	T	641		483	6.7	5.1	6.7	12.0	96.0	A	875		877	0.1	8.0	10.2	33.0	142.9	B
Massachusetts (E-		L	157		117	3.4	56.7	68.8	124.5	212.9	E	222		224	0.1	22.8	31.1	83.9	197.2	C
W) Ave. &	NB	T	946		729	7.5	7.2	8.6	76.3	214.2	A	819		831	0.4	5.0	6.4	50.2	194.4	A
Nebraska (N-S)		L	58		57	0.1	29.6	36.6	9.9	117.7	D	86		86	0.0	22.0	29.4	15.7	188.2	C
Ave.	SB	T	862		875	0.4	8.5	10.1	52.7	197.4	B	867		877	0.3	5.6	7.0	33.8	192.3	A
	Intersection		3971	All	3528	7.2	10.2	12.7	43.4	214.2	B	3681	All	3722	0.7	9.7	12.5	36.2	197.2	B

2013 Ward Circle NW Alternative 4 Traffic Volumes, Delay and Level of Service (LOS)

(Massachusetts Ave assumed E-W direction, Nebraska Ave assumed N-S direction)

			AM Peak Hour									PM Peak Hour								
			Volume				Delay (s)		Queue Length (ft)			Volume				Delay (s)		Queue Length (ft)		
Intersection	Approach	Movement	Balanced	Direction	Simulated	GEH <5.0	Stopped	Average	Average	Maximum	LOS	Balanced	Direction	Simulated	GEH <5.0	Stopped	Average	Average	Maximum	LOS
Node 12: Int. Massachusetts (E-W) & AU Driveway	NB	L	25	SW-NW	25	0.0	36.8	42.2	5.7	42.5	D	84	SW-NW	83	0.11	29.5	35.2	17.0	148.3	D
		T	2	SW-NE	2	0.0	27.6	30.5	5.7	42.5	C	9	SW-NE	9	0.00	20.2	25.7	17.0	148.3	C
		R	32	SW-SE	37	0.9	39.4	48.3	11.3	90.4	D	59	SW-SE	65	0.76	32.4	42.0	14.4	105.1	D
	SB	L	1	NE-SE	1	0.0	14.5	25.6	3.8	64.6	C	51	NE-SE	51	0.00	25.7	34.4	17.3	72.6	C
		T	14	NE-SW	14	0.0	36.9	43.0	3.8	64.6	D	24	NE-SW	24	0.00	22.9	28.4	17.3	72.6	C
		R	4	NE-NW	4	0.0	29.3	34.5	3.8	64.6	C	33	NE-NW	34	0.17	23.5	27.3	17.3	72.6	C
	EB	L	9	NW-NE	7	0.7	33.1	55.8	269.4	513.8	E	27	NW-NE	28	0.19	13.5	21.2	24.7	265.2	C
		T	1280	NW-SE	1166	3.3	41.8	65.1	269.4	513.8	E	753	NW-SE	757	0.15	4.8	9.0	24.7	265.2	A
		R	56	NW-SW	47	1.3	36.3	57.0	269.4	513.8	E	100	NW-SW	100	0.00	5.1	8.5	24.7	265.2	A
	WB	L	7	SE-SW	14	2.2	55.8	72.4	57.7	331.2	E	26	SE-SW	30	0.76	20.3	33.3	98.0	390.9	C
		T	638	SE-NW	631	0.3	14.3	23.8	57.7	331.2	C	1087	SE-NW	1093	0.18	15.6	24.5	98.0	390.9	C
		R	53	SE-NE	48	0.7	13.3	24.0	57.7	331.2	C	51	SE-NE	49	0.28	17.3	26.9	98.0	390.9	C
	Intersection		**2121**	**All**	**1996**	**2.8**	**32.2**	**50.0**	**84.6**	**513.8**	**D**	**2304**	**All**	**2323**	**0.40**	**13.1**	**20.1**	**39.0**	**390.9**	**C**
Node 13: Int. Massachusetts (E-W) Ave & DHS Driveway	EB	L	26	NW-NE	0	7.2	0.0	0.0	0.9	141.5	D	26	NW-NE	0	7.21	0.0	0.0	0.3	112.2	D
		T	1221	NW-SE	1142	2.3	0.2	1.1	0.9	141.5	A	773	NW-SE	782	0.32	0.1	0.5	0.3	112.2	A
	WB	T	808	SE-NW	809	0.0	0.0	1.4	0.0	23.6	A	1050	SE-NW	1047	0.09	1.9	5.9	6.2	191.1	A
		R	51	SE-NE	51	0.0	0.1	0.7	0.0	23.6	A	7	SE-NE	6	0.39	0.0	1.1	6.2	191.1	A
	SB	L	11	NE-SE	10	0.3	4.6	7.7	0.0	0.0	A	37	NE-SE	37	0.00	8.6	19.1	0.0	23.2	B
		R	15	NE-NW	15	0.0	0.3	2.2	0.0	0.0	A	116	NE-NW	116	0.00	4.0	7.7	0.5	78.9	A
	Intersection		**2132**	**All**	**2027**	**2.3**	**0.2**	**1.2**	**0.3**	**141.5**	**A**	**2009**	**All**	**1988**	**0.47**	**1.4**	**4.1**	**2.2**	**191.1**	**A**
Node 14: Int. Nebraska (N-S) Ave & AU Parking Lot	NB	T	1250	SW-NE	1077	5.1	36.9	62.7	182.0	357.5	E	1114	SW-NE	1126	0.36	1.0	4.3	2.7	272.5	A
		R	4	SW-E	1	1.9	0.0	0.9	182.0	357.5	A	3	SW-E	3	0.00	0.0	0.2	2.7	272.5	A
	WB	R	18	SE-NE	18	0.0	12.6	16.8	0.0	0.0	B	69	SE-NE	69	0.00	1.2	2.1	0.0	20.0	A
	Intersection		**1272**	**All**	**1096**	**5.1**	**36.5**	**61.9**	**121.3**	**357.5**	**E**	**1186**	**All**	**1198**	**0.35**	**1.0**	**4.1**	**1.8**	**272.5**	**A**
Node 15: Int. Nebraska (N-S) Ave & New Mexico Ave	EB	L	0	NW-NE	0		0.0	0.0	2.0	28.9	A	12	NW-NE	11	0.29	29.2	34.1	12.4	65.3	C
		T	3	NW-SE	3	0.0	61.8	68.4	2.0	28.9	E	10	NW-SE	10	0.00	45.5	51.5	12.4	65.3	D
		R	2	NW-SW	2	0.0	70.4	75.9	2.0	28.9	E	26	NW-SW	26	0.00	45.4	50.6	12.4	65.3	D
	WB	L	74	SE-SW	73	0.1	38.0	46.7	19.4	139.5	D	95	SE-SW	96	0.10	34.5	41.2	22.5	133.2	D
		T	8	SE-NW	8	0.0	28.3	37.1	19.4	139.5	D	9	SE-NW	8	0.34	16.4	23.1	22.5	133.2	C
		R	270	SE-NE	268	0.1	62.0	96.8	71.7	411.4	F	280	SE-NE	281	0.06	22.5	34.5	52.0	217.6	C
	NB	L	1	SW-NW	1	0.0	48.7	59.2	332.2	437.9	E	4	SW-NW	4	0.00	0.0	0.4	53.0	332.2	A
		T	984	SW-NE	816	5.6	68.8	97.6	332.2	437.9	F	825	SW-NE	836	0.38	13.2	18.7	53.0	332.2	B
		R	40	SW-SE	32	1.3	82.8	117.3	332.2	437.9	F	45	SW-SE	45	0.00	8.8	13.3	53.0	332.2	B
	SB	L	362	NE-SE	353	0.5	24.8	39.9	102.7	774.6	D	319	NE-SE	317	0.11	12.9	23.8	60.7	517.2	C
		T	911	NE-SW	901	0.3	9.2	17.5	102.7	774.6	B	951	NE-SW	963	0.39	8.2	14.7	60.7	517.2	B
		R	19	NE-NW	20	0.2	5.0	9.5	102.7	774.6	A	20	NE-NW	19	0.23	6.4	10.7	60.7	517.2	B
	Intersection		**2674**	**All**	**2477**	**3.9**	**38.7**	**58.0**	**118.4**	**774.6**	**E**	**2596**	**All**	**2616**	**0.39**	**13.5**	**20.7**	**39.6**	**517.2**	**C**
Node 17: Int. Massachusetts (E-W) Ave & Berkshire Apts	EB	T	1206	NW-SE	1156	1.5	4.8	10.4	40.1	379.3	B	810	NW-SE	816	0.21	1.3	5.0	8.2	261.5	A
	WB	T	848	SE-NW	852	0.1	1.4	3.3	7.6	185.7	A	1038	SE-NW	1037	0.03	1.6	3.8	10.7	211.3	A
	SB	L	14	NE-SE	14	0.0	27.2	31.3	2.5	48.0	C	23	NE-SE	23	0.00	39.9	44.1	5.7	72.5	D
		R	11	NE-NW	11	0.0	28.9	33.3	2.0	50.0	C	19	NE-NW	19	0.00	31.5	37.3	3.6	46.5	D
	Intersection		**2079**	**All**	**2033**	**1.0**	**3.7**	**7.7**	**13.1**	**379.3**	**A**	**1890**	**All**	**1895**	**0.11**	**2.3**	**5.2**	**7.0**	**261.5**	**A**
Node 18: Int. Massachusetts (E-W) Ave (East End of Ward Circle)	WB	R	823	S-N	823	0.0	0.0	0.4	0.1	41.1	A	1166	S-N	1162	0.12	0.0	0.6	0.1	57.4	A
	NB	T	157	SW-N	152	0.4	9.0	11.1	8.7	107.5	B	222	SW-N	214	0.54	14.2	17.7	17.8	130.5	B
		R	1221	W-E	1142	2.3	2.6	2.9	1.0	106.0	A	773	W-E	782	0.32	1.7	2.0	0.5	110.9	A
	Intersection		**2201**	**All**	**2117**	**1.8**	**1.3**	**1.9**	**1.3**	**107.5**	**A**	**2161**	**All**	**2158**	**0.06**	**0.0**	**0.0**	**0.1**	**15.0**	**A**
Node 19: Int. Massachusetts (E-W) Ave (West End of Ward Circle)	EB	R	1313	N-S	1209	2.9	0.0	0.5	0.2	50.6	A	863	N-S	876	0.44	0.0	0.3	0.0	23.7	A
	SB	T	58	NE-S	56	0.3	4.1	5.2	1.2	28.2	A	86	NE-S	88	0.21	7.9	9.6	4.0	70.2	A
		R	698	E-W	700	0.1	4.3	5.1	0.1	45.5	A	1164	E-W	1173	0.26	5.2	6.1	3.9	170.0	A
	Intersection		**2069**	**All**	**1965**	**2.3**	**0.4**	**0.9**	**0.3**	**50.6**	**A**	**2113**	**All**	**2137**	**0.52**	**0.7**	**1.3**	**0.6**	**70.2**	**A**

2013 Ward Circle NW Alternative 4 Traffic Volumes, Delay and Level of Service (LOS)

(Massachusetts Ave assumed E-W direction, Nebraska Ave assumed N-S direction)

			AM Peak Hour									PM Peak Hour								
			Volume				Delay (s)		Queue Length (ft)			Volume				Delay (s)		Queue Length (ft)		
Intersection	Approach	Movement	Balanced	Direction	Simulated	GEH <5.0	Stopped	Average	Average	Maximum	LOS	Balanced	Direction	Simulated	GEH <5.0	Stopped	Average	Average	Maximum	LOS
Node 20: Int. Nebraska (N-S) Ave (South End of Ward Circle)	EB	L	68	N-NE	73	0.6	8.3	11.3	3.2	66.1	B	81	N-NE	91	1.08	3.7	6.0	0.7	45.6	A
		T	1056	N-E	962	3.0	4.6	6.8	14.1	124.8	A	631	N-E	636	0.20	5.4	7.4	11.9	152.5	A
		R	247	N-SW	229	1.2	4.4	6.3	5.6	85.6	A	237	N-SW	237	0.00	3.8	8.5	5.8	131.9	A
	NB	T	946	SW-NE	942	0.1	48.7	65.3	331.8	455.9	E	819	SW-NE	847	0.97	21.7	30.0	129.7	447.2	C
		R	322	SW-E	328	0.3	93.9	122.2	331.8	455.9	F	364	SW-E	356	0.42	26.1	35.6	129.7	447.2	D
	SB	T	1045	N-SW	1059	0.4	8.7	11.2	36.3	265.2	B	1053	N-SW	1062	0.28	8.5	10.7	40.6	241.1	B
	Intersection		**3684**	**All**	**3593**	**1.5**	**22.7**	**30.3**	**84.5**	**455.9**	**C**	**3185**	**All**	**3229**	**0.78**	**13.7**	**18.6**	**49.0**	**447.2**	**B**
Node 21: Int. Nebraska (N-S) Ave (North End of Ward Circle)	WB	L	183	S-NE	184	0.1	1.7	3.5	1.4	27.2	A	186	S-NE	184	0.15	7.9	11.1	5.5	46.1	B
		T	641	S-W	631	0.4	7.8	10.3	21.3	155.2	B	1097	S-W	1095	0.06	9.5	12.8	41.3	168.4	B
		R	156	S-SW	162	0.5	3.2	4.0	3.2	46.1	A	105	S-SW	96	0.90	4.9	6.1	2.8	69.7	A
	NB	T	1014	S-NE	835	5.9	10.8	12.9	38.0	220.7	B	900	S-NE	930	0.99	11.7	13.8	43.6	151.7	B
	SB	T	862	NE-SW	878	0.5	15.3	21.1	80.0	262.3	C	867	NE-SW	883	0.54	17.8	23.8	101.5	269.9	C
		R	115	NE-W	123	0.7	27.2	37.1	80.0	262.3	D	153	NE-W	163	0.80	20.1	26.7	101.5	269.9	C
	Intersection		**2971**	**All**	**2813**	**2.9**	**11.0**	**14.5**	**28.7**	**262.3**	**B**	**3308**	**All**	**3351**	**0.75**	**13.1**	**17.0**	**41.2**	**269.9**	**B**
Node 29: Int. Nebraska (N-S) Ave and DHS (North Driveway) /Church Driveway	EB	L	8	NW-NE	8	0.0	1.3	5.5	0.5	29.8	A	0	NW-NE	0		0.0	0.0	0.0	0.0	A
		R	0	NW-SW	0	0.0	0.0	0.0	0.2	39.0	A	3	NW-SW	3	0.00	0.1	3.6	1.0	29.7	A
	WB	L	0	SE-SW	0	0.0	0.0	0.0	0.2	39.0	A	9	SE-SW	9	0.00	5.9	15.0	1.0	29.7	B
		R	1	SE-NE	1	0.0	0.1	5.0	0.0	0.0	A	42	SE-NE	42	0.00	0.1	4.7	0.0	0.0	A
	NB	L	0	SW-NW	0		0.0	0.0	0.6	78.2	A	1	SW-NW	1	0.00	3.5	11.4	7.1	277.4	B
		T	1068	SW-NE	910	5.0	0.4	2.4	0.5	29.8	A	1003	SW-NE	1024	0.66	1.4	6.5	0.9	40.6	A
		R	102	SW-SE	86	1.7	1.5	4.6	0.6	78.1	A	1	SW-SE	1	0.00	0.0	9.1	7.1	277.2	A
	SB	L	55	NE-SE	55	0.0	7.4	13.8	7.5	195.9	B	12	NE-SE	12	0.00	5.8	13.9	6.4	177.4	B
		T	977	NE-SW	1002	0.8	0.9	4.1	0.2	39.0	A	1008	NE-SW	1031	0.72	0.9	4.9	1.0	29.7	A
		R	0	NE-NW	0	0.0	0.0	0.0	7.5	195.9	A	2	NE-NW	2	0.00	0.0	2.3	6.4	177.4	A
	Intersection		**2211**	**All**	**2062**	**3.2**	**0.9**	**3.6**	**1.8**	**195.9**	**A**	**2081**	**All**	**2125**	**0.96**	**1.2**	**5.8**	**3.2**	**277.4**	**A**
Node 34: Nebraska (N-S) Ave & DHS (South	NB	T	1170	SW-NE	997	5.3	0.3	1.3	0.4	63.7	A	1005	SW-NE	1026	0.66	0.3	1.4	0.6	64.7	A
	SB	T	977	NE-SW	1004	0.9	1.7	5.4	2.8	96.6	A	1020	NE-SW	1042	0.69	3.5	8.0	5.1	208.0	A
	Intersection		**2147**	**All**	**2001**	**3.2**	**1.0**	**3.3**	**1.1**	**96.6**	**A**	**2025**	**All**	**2068**	**0.95**	**1.9**	**4.7**	**1.9**	**208.0**	**A**