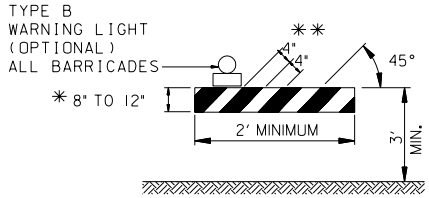

TYPE I BARRICADE

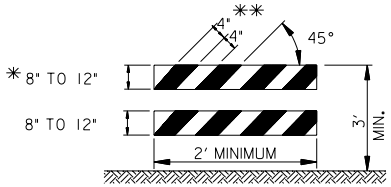

TYPE II BARRICADE

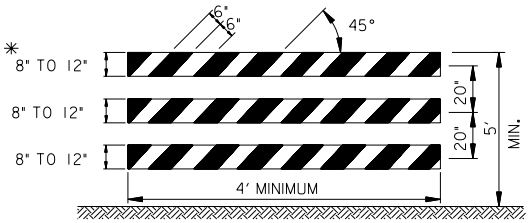

TYPE III BARRICADE

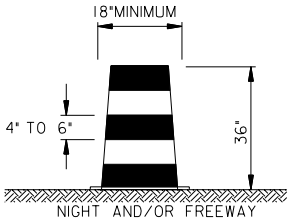

NIGHT AND/OR FREEWAY
HIGH SPEED ROADWAY
(≥ 45 MPH)

DRUM

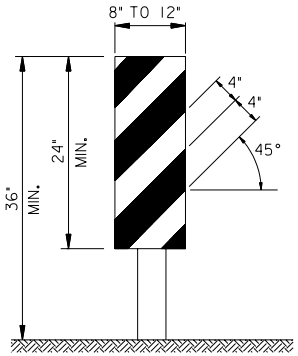

VERTICAL PANEL

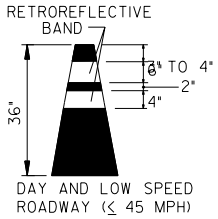

DAY AND LOW SPEED
ROADWAY (≤ 45 MPH)

CONE

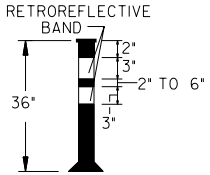

TUBULAR MARKER

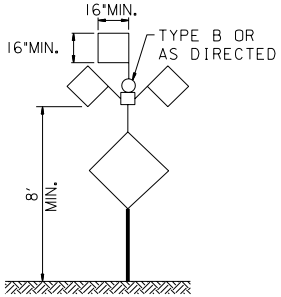

HIGH LEVEL PORTABLE
WARNING DEVICE

* FOR WOODEN BARRICADES, NOMINAL LUMBER DIMENSIONS WILL BE SATISFACTORY.

** FOR RAILS LESS THAN 3 FEET LONG, 4 IN. WIDE STRIPES SHALL BE USED.
FOR RAILS MORE THAN 3 FEET LONG, 6 IN. WIDE STRIPES SHALL BE USED.

WARNING LIGHTS	TYPE B HIGH INTENSITY	TYPE C STEADY BURN (SEE NOTE NO.13)
LENS DIRECTIONAL FACES	1	1 OR 2
FLASHING RATE PER MINUTE	55 TO 75	CONSTANT
FLASH DURATION ***	8%	CONSTANT
MINIMUM EFFECTIVE INTENSITY ****	35 CANDELAS	—
MINIMUM BEAM CANDLE POWER ****	—	2 CANDELAS
HOURS OF OPERATION	24 HRS/DAY	DUSK TO DAWN

*** LENGTH OF TIME THAT INSTANTANEOUS INTENSITY IS EQUAL TO OR GREATER THAN EFFECTIVE INTENSITY.

**** THESE VALUES MUST BE MAINTAINED WITHIN A SOLID ANGLE 9 DEGREES ON EACH SIDE OF THE VERTICAL AXIS, AND 5 DEGREES ABOVE AND 5 DEGREES BELOW THE HORIZONTAL AXIS.

NOTES:

1. FLASHING WARNING LIGHTS MAY BE USED ON BARRICADES, SIGNS AND HIGH LEVEL WARNING DEVICES, AS DIRECTED.
2. MARKING ON WARNING DEVICES SHALL BE REFLECTORIZED ORANGE AND WHITE STRIPES.
3. CONES SHALL BE FLUORESCENT ORANGE.
4. FLAGS SHALL BE ORANGE.
5. STABILITY OF TUBES/CONES MAY BE IMPROVED USING APPROVED ADHESIVE OR SAND BAG RINGS.
6. TIMBER BARRICADES SHALL NOT BE USED ON ANY CONSTRUCTION PROJECT AS A POSITIVE BARRIER, AT ANY SPEED.
7. WHEN POSITIVE BARRIERS ARE NEEDED, TEMPORARY PRECAST CONCRETE BARRIERS OR METAL BEAM SYSTEMS SHALL BE USED.
8. SAFETY DRUMS SHALL BE USED WHEN CHANNELIZATION AND DELINEATION IS THE PRIMARY NEED. DEVICES SUCH AS PORTABLE BARRICADES, CONES, VERTICAL PANELS, ETC., MAY BE USED AS DIRECTED.
9. ALIGNMENT OF STRIPING ON SUCCESSIVE BARRICADES SHALL BE CONSISTENT OR DOWN TOWARDS THE DIRECTION OF TRAFFIC FLOW.
10. ALL REFLECTORIZED SURFACES ON DRUMS, CONES, BARRICADES, ETC., SHALL BE TYPE III, TYPE VI OR TYPE IX SHEETING, ACCORDING TO STANDARD SPECIFICATION 616.
11. WORK ZONE CHANNELIZING DEVICES SHALL MEET THE REQUIREMENTS OF NCHRP REPORT 350, CATEGORIES 1 AND 2.
12. BARRICADES INTENDED FOR USE ON EXPRESSWAYS, FREEWAYS, AND OTHER HIGH SPEED ROADWAYS SHALL HAVE A MINIMUM OF 270 SQUARE IN. OF RELECTIVE AREA FACING TRAFFIC.
13. STEADY BURN LIGHTS SHALL ONLY BE USED INDIVIDUALLY AS SPECIFIED IN THE T.C.P.

DATE	APPR.	REFERENCE
REVISED		
ISSUED:		

RECOMMENDED: DEPUTY CHIEF ENGINEER

APPROVED: CHIEF TRANSPORTATION ENGINEER

WORK ZONE CHANNELIZING DEVICES

d. DISTRICT OF COLUMBIA
DEPARTMENT OF TRANSPORTATION

DWG. NO. 616.06

p:\4035\dc standard drawings\final\616-06.DGN
Friday, April 03, 2009 AT 12:19 PM

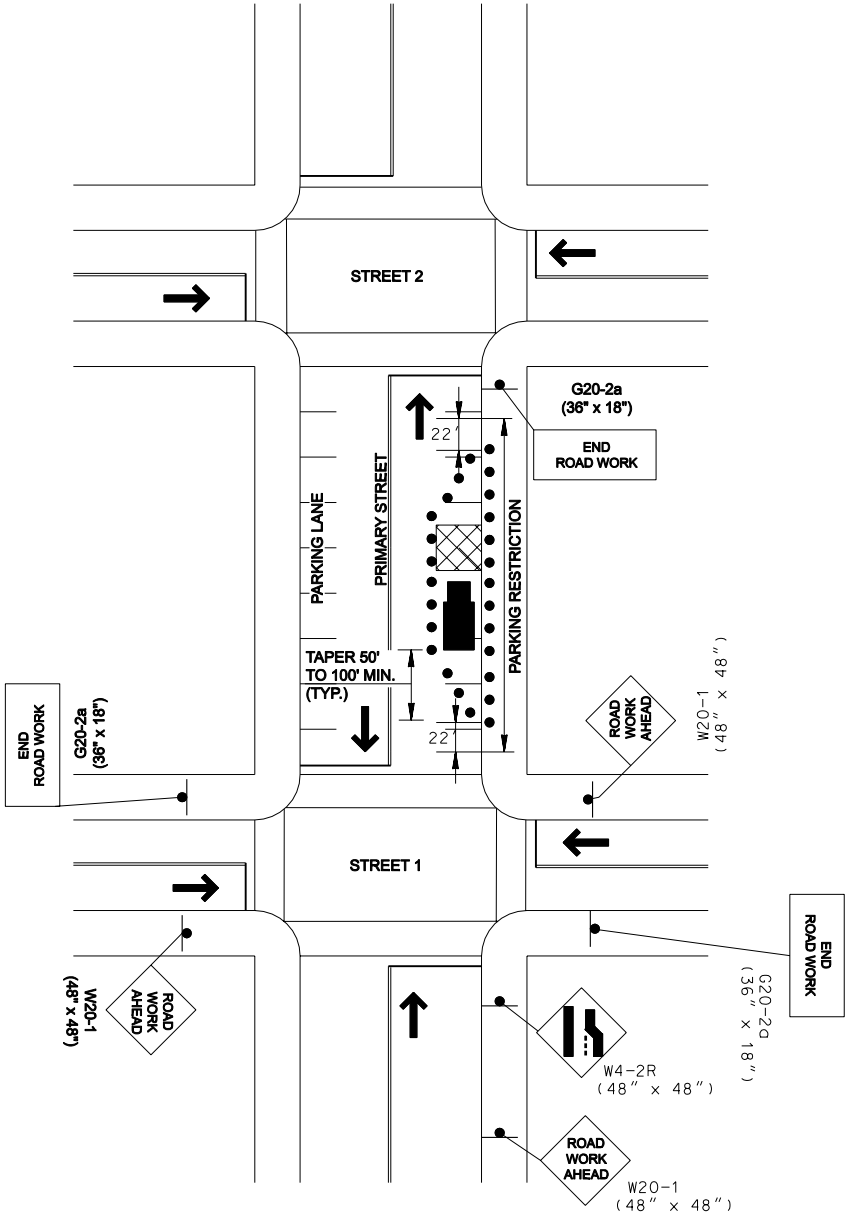

SEE THE GENERAL NOTES ON PAGE DWG. 616.00

LEGEND:

- TRAFFIC DRUMS /CONES
- WORK SITE
- SIGN
- DIRECTION OF TRAFFIC
- TRUCK MOUNTED ATTENUATOR

DATE	APPR.	
REVISED		
ISSUED:		
		REFERENCE

RECOMMENDED: DEPUTY CHIEF ENGINEER

APPROVED: CHIEF TRANSPORTATION ENGINEER

TYPICAL TCP FOR PARKING LANE CLOSURE

DISTRICT OF COLUMBIA
DEPARTMENT OF TRANSPORTATION

DWG. NO. 616.07

p:\4035\dc standard drawings\final\616-07.DGN
Friday, April 03, 2009 AT 12:19 PM

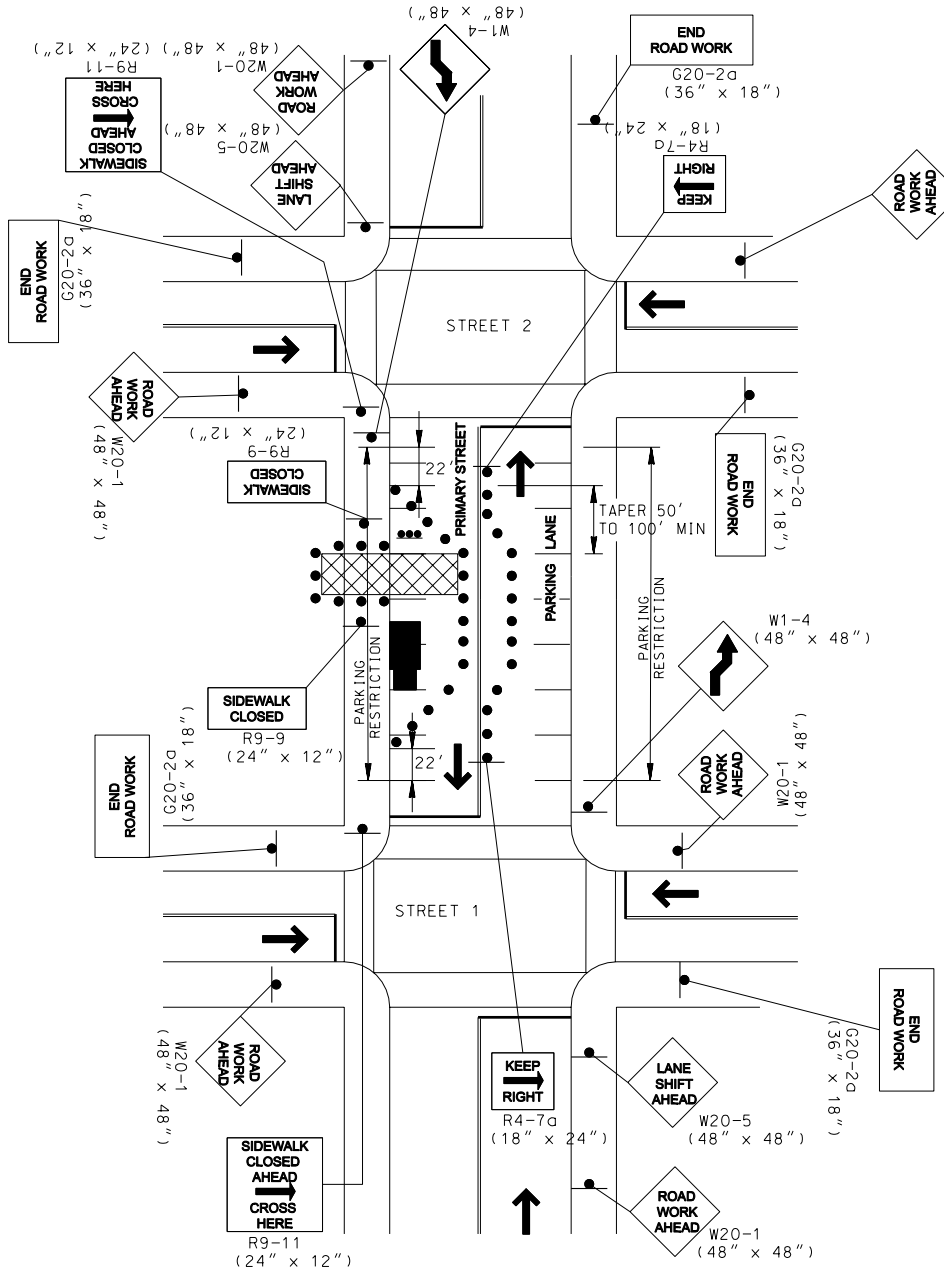

SEE THE GENERAL NOTES
ON PAGE DWG. 616.00

LEGEND:

- ARROW PANEL
- TRAFFIC DRUMS /CONES
- WORK SITE
- SIGN
- DIRECTION OF TRAFFIC
- TRUCK MOUNTED ATTENUATOR

			RECOMMENDED: DEPUTY CHIEF ENGINEER
DATE	APPR.		APPROVED: CHIEF TRANSPORTATION ENGINEER
REVISED			
ISSUED:		REFERENCE	

TYPICAL TCP FOR TRAVEL LANE, PARKING LANE AND SIDEWALK CLOSURE

DISTRICT OF COLUMBIA
DEPARTMENT OF TRANSPORTATION

DWG. NO. **616.08**

p:\4035\dc standard drawings\final\616-08.DGN
Friday, April 03, 2009 AT 1:19 PM

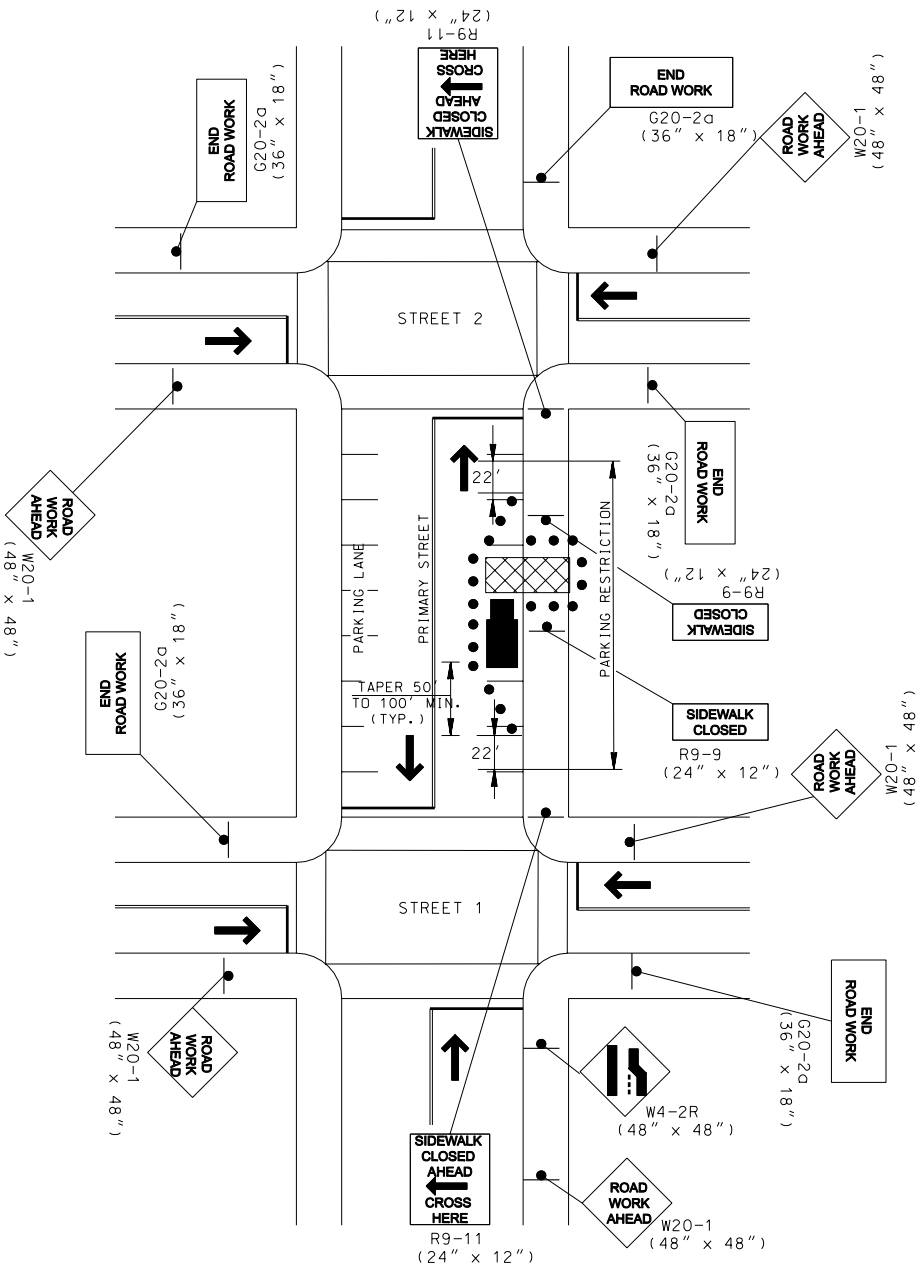

SEE THE GENERAL NOTES
ON PAGE DWG. 616.00

LEGEND:

- TRAFFIC DRUMS /CONES
- WORK SITE
- SIGN
- DIRECTION OF TRAFFIC
- TRUCK MOUNTED ATTENUATOR

DATE	APPR.	
REVISED		
ISSUED:		
		REFERENCE

RECOMMENDED: DEPUTY CHIEF ENGINEER

APPROVED: CHIEF TRANSPORTATION ENGINEER

TYPICAL TCP FOR PARKING LANE/SIDEWALK CLOSURE

d. DISTRICT OF COLUMBIA
DEPARTMENT OF TRANSPORTATION

DWG. NO. 616.09

p:\4035\dc standard drawings\final\616-09.DGN
Friday, April 03, 2009 AT 12:19 PM

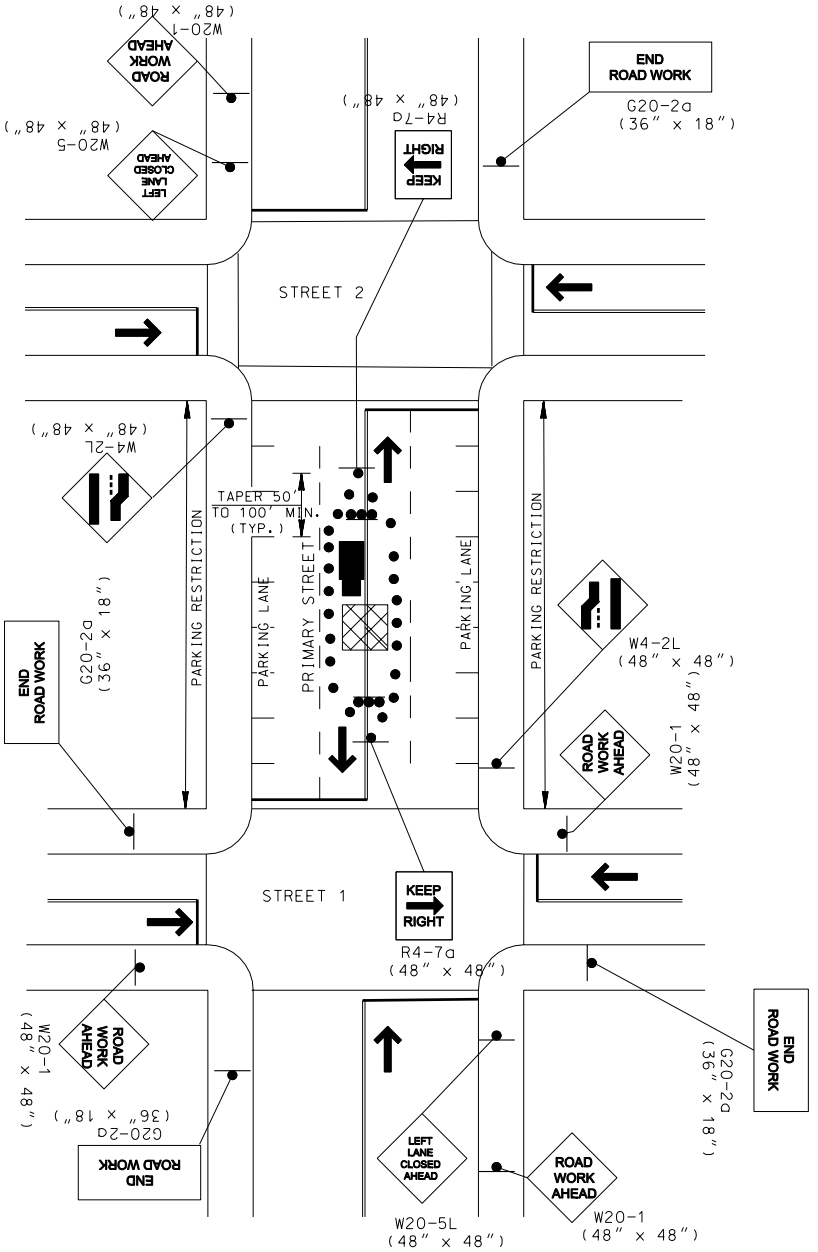

SEE THE GENERAL NOTES ON PAGE DWG. 616.00

LEGEND:

- ARROW PANEL
- TRAFFIC DRUMS /CONES
- WORK SITE
- SIGN
- DIRECTION OF TRAFFIC
- TRUCK MOUNTED ATTENUATOR

DATE	APPR.	REFERENCE
REVISED		
ISSUED:		

RECOMMENDED: DEPUTY CHIEF ENGINEER

APPROVED: CHIEF TRANSPORTATION ENGINEER

TCP FOR INTERIOR LANE CLOSURE ON MULTI-LANE TWO WAY STREET

DISTRICT OF COLUMBIA
DEPARTMENT OF TRANSPORTATION

DWG. NO. **616.10**

p:\4035\dc standard drawings\final\616-10.DGN
Friday, April 03, 2009 AT 12:19 PM

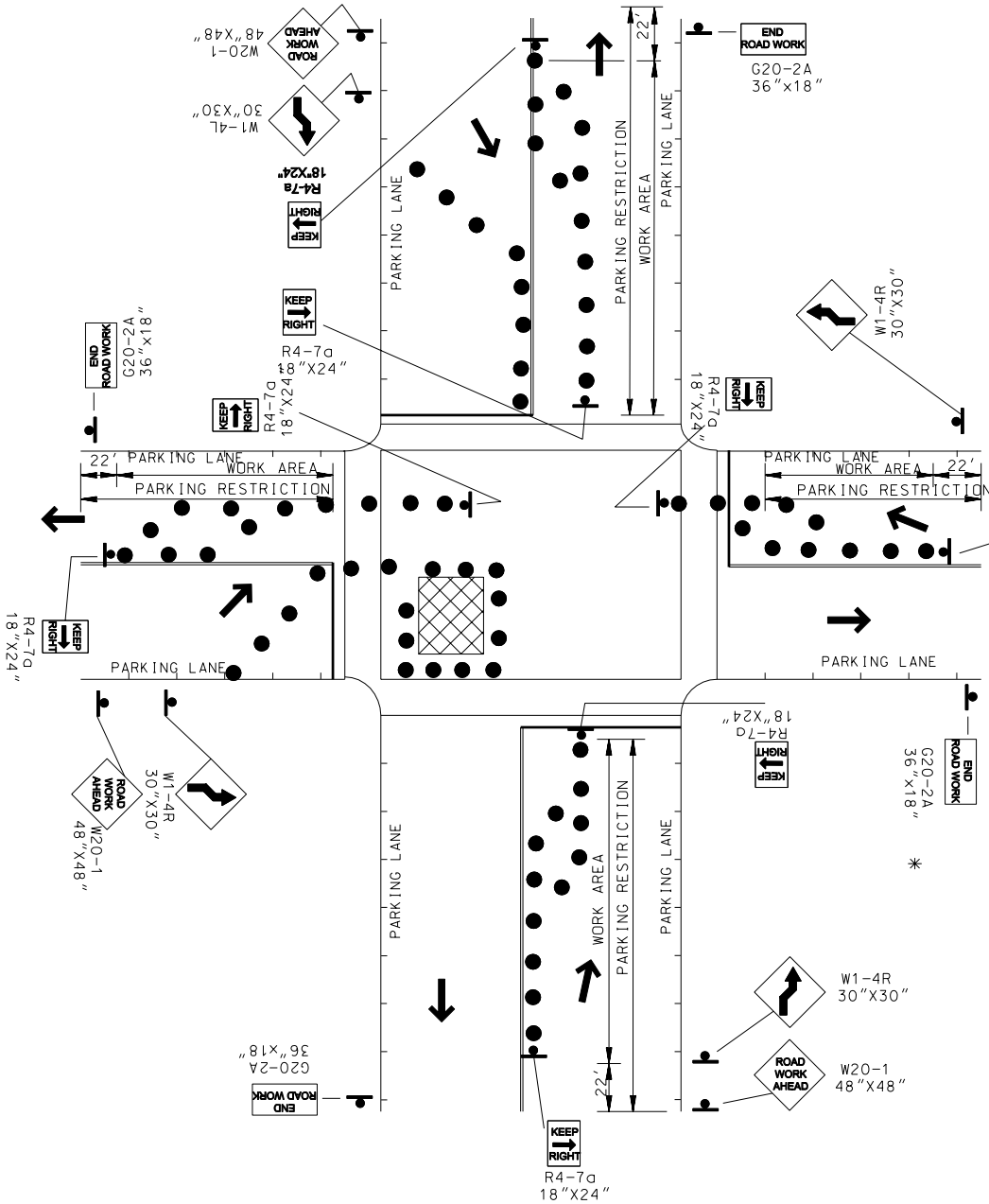

SEE THE GENERAL NOTES ON PAGE DWG. 616.00

THE TRAFFIC MANAGEMENT CENTER (TMC) SHALL BE NOTIFIED 48 HRS. PRIOR TO WORK AT SIGNALIZED INTERSECTIONS. TEL. 202-671-DDOT (3368)

LEGEND:

- TRAFFIC DRUMS /CONES
- WORK SITE
- SIGN
- DIRECTION OF TRAFFIC
- TRUCK MOUNTED ATTENUATOR

DATE	APPR.	REFERENCE
REVISED		
ISSUED:		

RECOMMENDED: DEPUTY CHIEF ENGINEER

APPROVED: CHIEF TRANSPORTATION ENGINEER

TCP FOR CLOSURE AT SIDE OF INTERSECTON

DISTRICT OF COLUMBIA
DEPARTMENT OF TRANSPORTATION

DWG. NO. 616.11

p:\4035\dc standard drawings\final\616-11.DGN
Friday, April 03, 2009 AT 12:20 PM

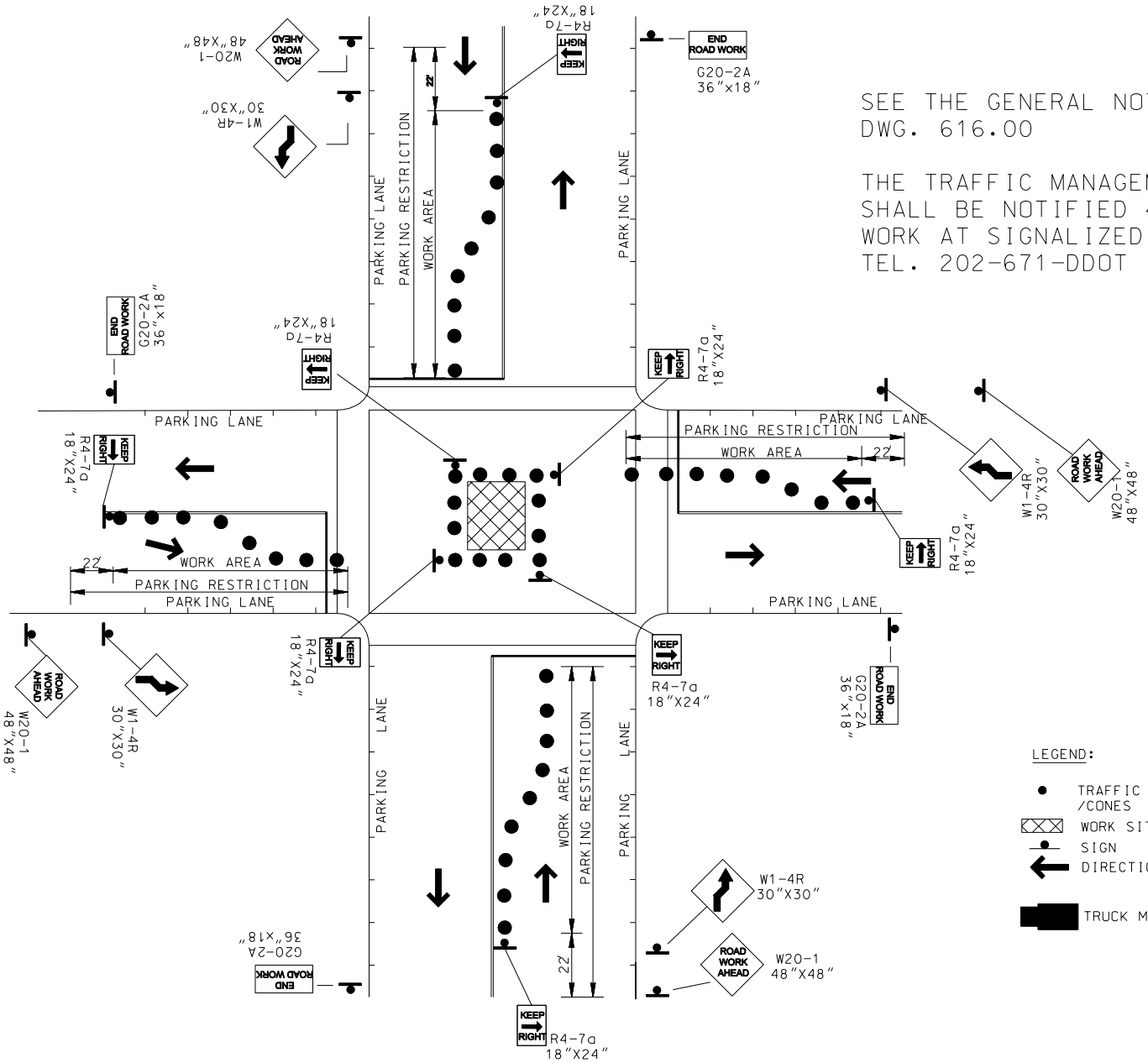

SEE THE GENERAL NOTES ON PAGE DWG. 616.00

THE TRAFFIC MANAGEMENT CENTER (TMC) SHALL BE NOTIFIED 48 HRS. PRIOR TO WORK AT SIGNALIZED INTERSECTIONS. TEL. 202-671-DDOT (3368)

LEGEND:

- TRAFFIC DRUMS /CONES
- WORK SITE
- SIGN
- DIRECTION OF TRAFFIC
- TRUCK MOUNTED ATTENUATOR

DATE	APPR.	
REVISED		
ISSUED:		
		REFERENCE

RECOMMENDED: DEPUTY CHIEF ENGINEER

APPROVED: CHIEF TRANSPORTATION ENGINEER

TCP FOR CLOSURE IN CENTER OF INTERSECTON

d. DISTRICT OF COLUMBIA
DEPARTMENT OF TRANSPORTATION

DWG. NO. 616.12

p:\4035\dc standard drawings\final\616-12.DGN
Friday, April 03, 2009 AT 12:20 PM

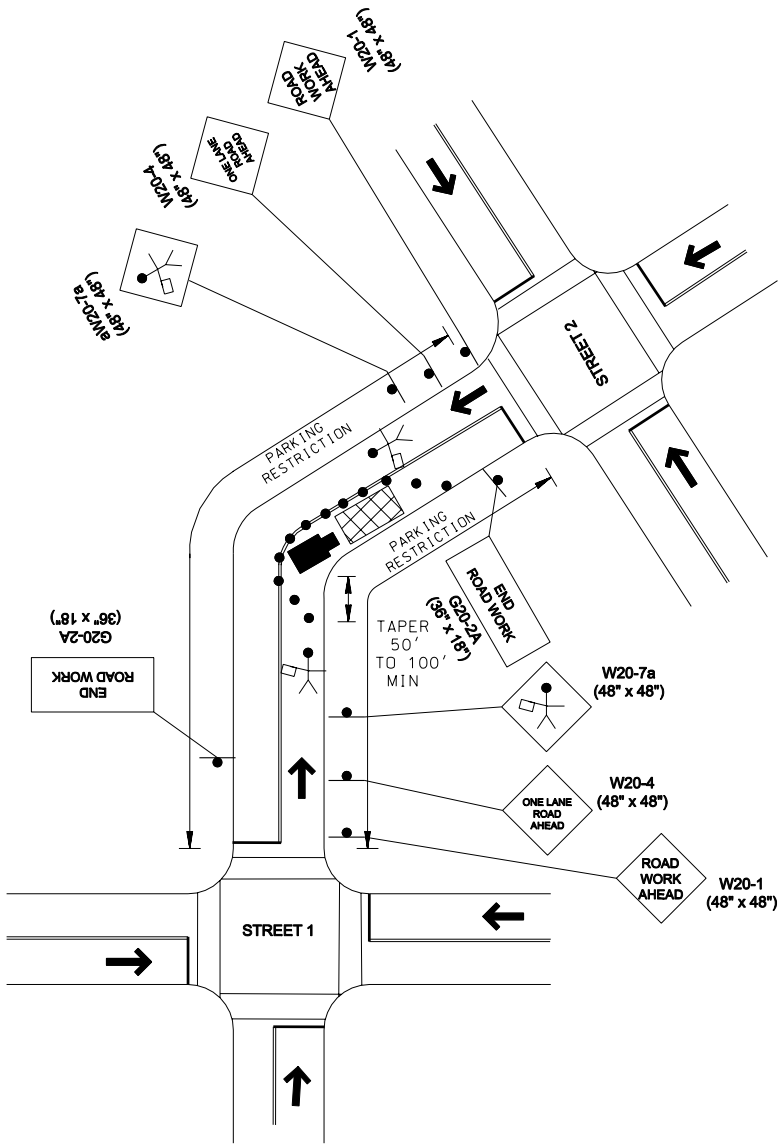

SEE THE GENERAL NOTES
ON PAGE DWG. 616.00

LEGEND:

- TRAFFIC DRUMS /CONES
- WORK SITE
- SIGN
- DIRECTION OF TRAFFIC
- TRUCK MOUNTED ATTENUATOR
- FLAGGER

DATE	APPR.	
REVISED		
ISSUED:		
		REFERENCE

RECOMMENDED: DEPUTY CHIEF ENGINEER

APPROVED: CHIEF TRANSPORTATION ENGINEER

TCP FOR LANE CLOSURE ON TWO-WAY ROAD AND NO EXISTING PARKING, WITH FLAGGERS

d. DISTRICT OF COLUMBIA
DEPARTMENT OF TRANSPORTATION

DWG. NO. 616.13

p:\4035\dc standard drawings\final\616-13.DGN
Friday, April 03, 2009 AT 12:20 PM

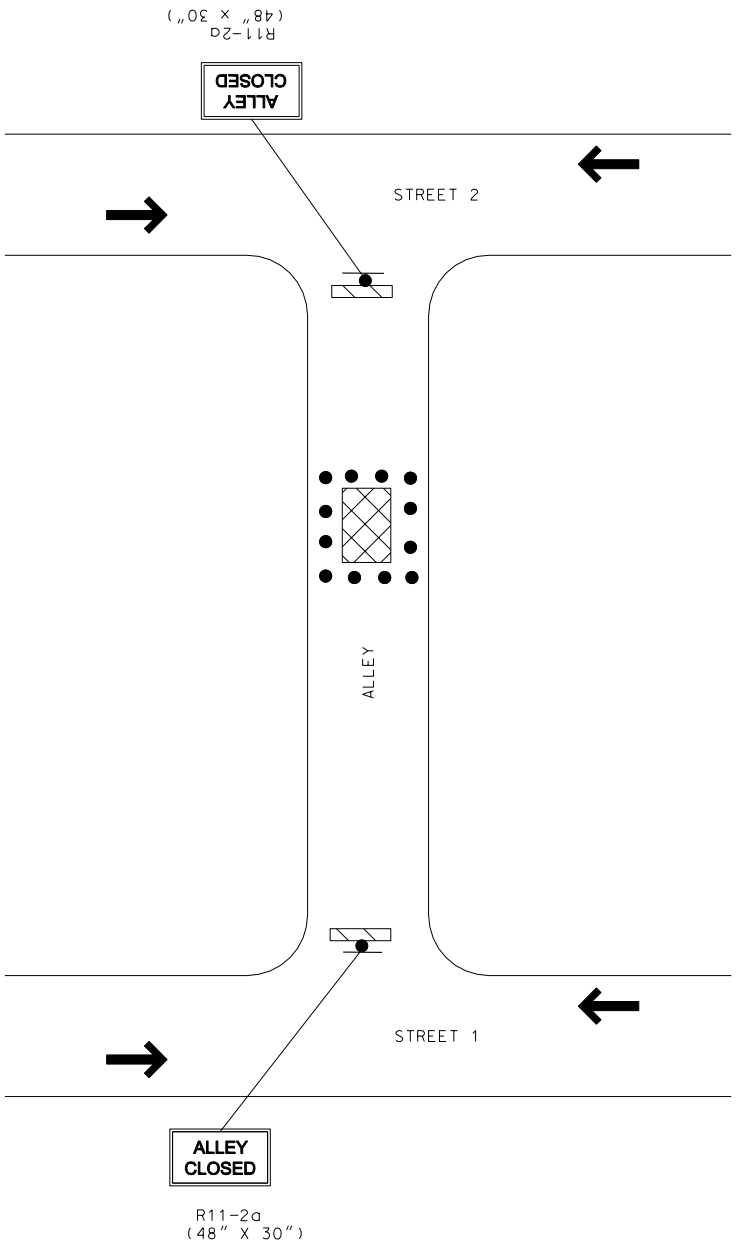

SEE THE GENERAL NOTES ON PAGE DWG. 616.00

MUST NOTIFY DPW 48 HOURS IN ADVANCE BY CALLING 311 OR (202)645-4301 / (202)645-7160 REGARDING TRASH PICKUP.

LEGEND:

- TRAFFIC DRUMS /CONES
- WORK SITE
- SIGN
- DIRECTION OF TRAFFIC
- TYPE 3 BARRICADE

DATE	APPR.	REFERENCE
REVISED		
ISSUED:		

RECOMMENDED: DEPUTY CHIEF ENGINEER

APPROVED: CHIEF TRANSPORTATION ENGINEER

TCP FOR ALLEY CLOSURE

DISTRICT OF COLUMBIA
DEPARTMENT OF TRANSPORTATION

DWG. NO. 616.14

p:\4035\dc standard drawings\final\616-14.DGN
Friday, April 03, 2009 AT 12:20 PM

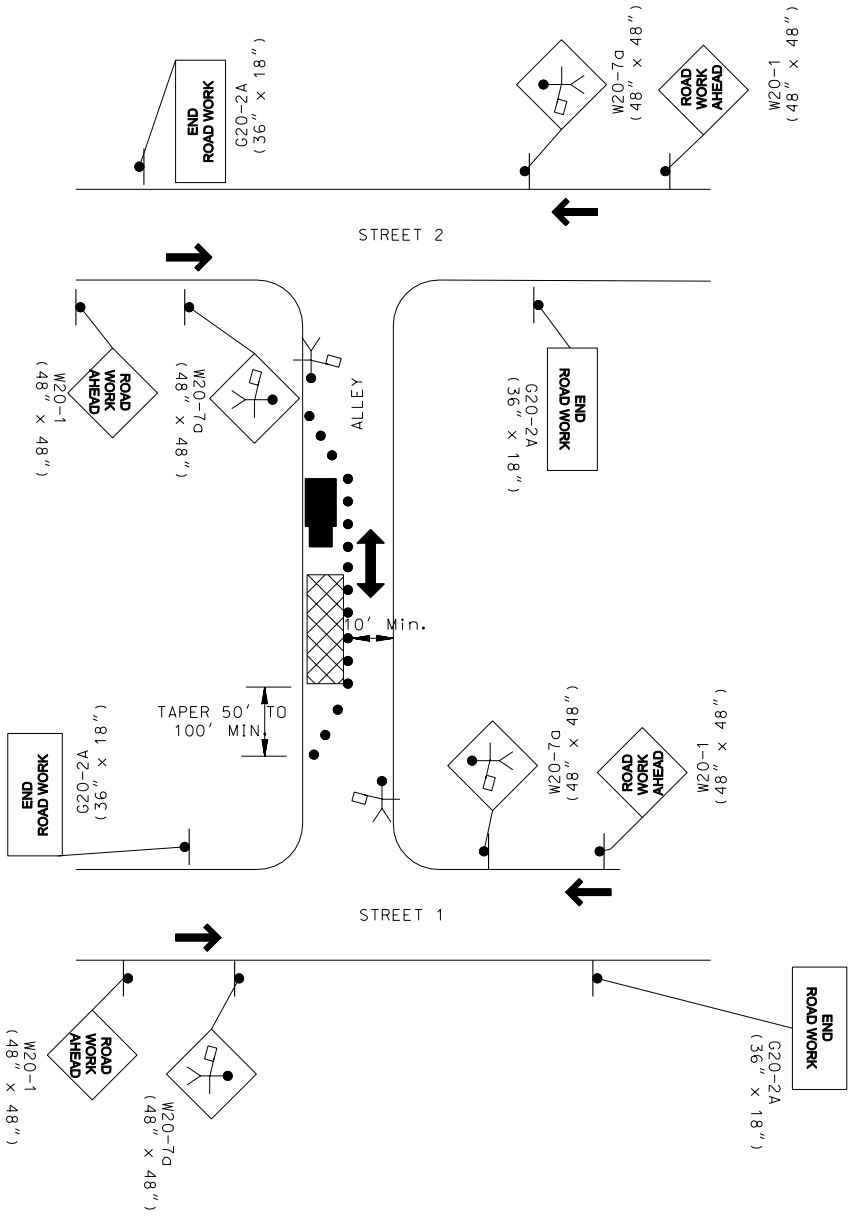

SEE THE GENERAL NOTES ON PAGE DWG. 616.00

LEGEND:

- TRAFFIC DRUMS /CONES
- WORK SITE
- SIGN
- DIRECTION OF TRAFFIC
- TRUCK MOUNTED ATTENUATOR
- FLAGGER

DATE	APPR.	REFERENCE
REVISED		
ISSUED:		

RECOMMENDED: DEPUTY CHIEF ENGINEER

APPROVED: CHIEF TRANSPORTATION ENGINEER

TYPICAL TCP FOR PARTIAL ALLEY CLOSURE

DISTRICT OF COLUMBIA
DEPARTMENT OF TRANSPORTATION

DWG. NO. **616.15**

p:\4035\dc standard drawings\final\616-15.DGN
Friday, April 03, 2009 AT 12:20 PM

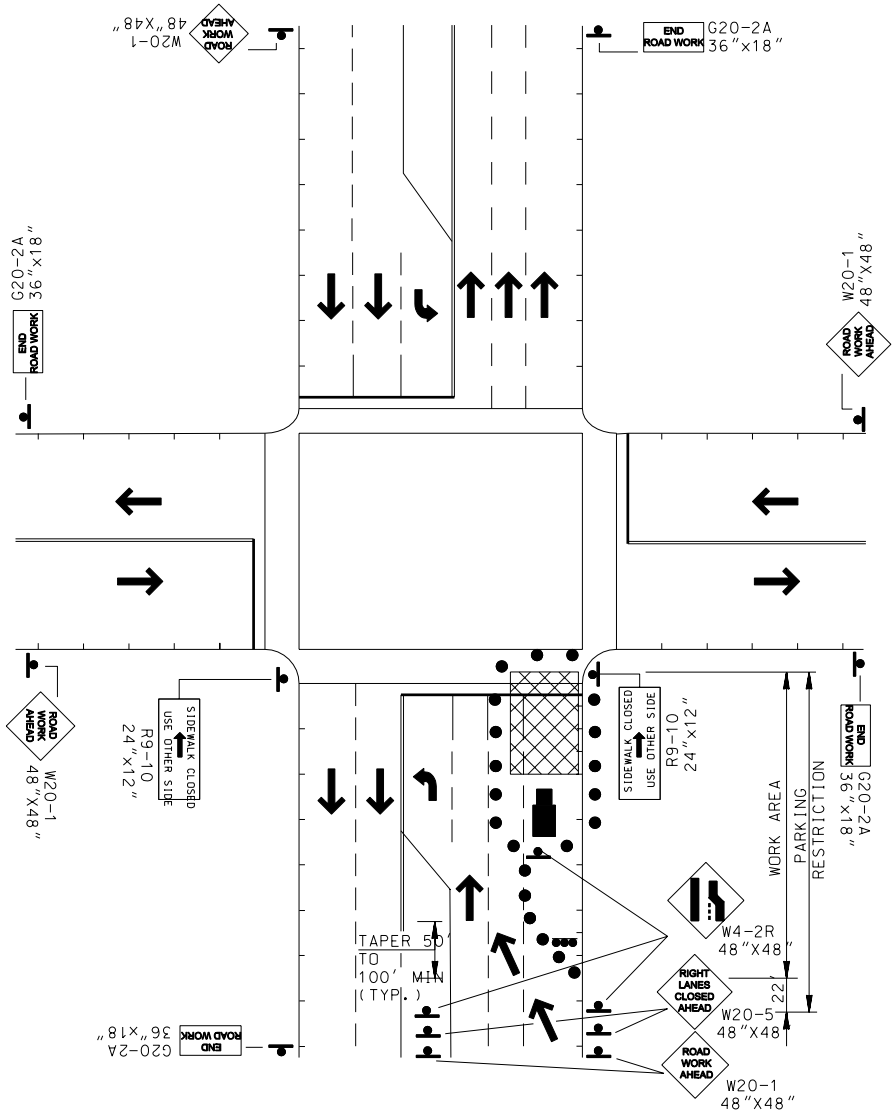

SEE THE GENERAL NOTES
ON PAGE DWG. 616.00

LEGEND:

- ARROW PANEL
- TRAFFIC DRUMS /CONES
- WORK SITE
- SIGN
- DIRECTION OF TRAFFIC
- TRUCK MOUNTED ATTENUATOR

DATE	APPR.	
REVISED		
ISSUED:		
		REFERENCE

RECOMMENDED: _____
DEPUTY CHIEF ENGINEER

APPROVED: _____
CHIEF TRANSPORTATION ENGINEER

TCP FOR RIGHT LANE CLOSURES WITH NO PARKING PERMITTED

DISTRICT OF COLUMBIA
DEPARTMENT OF TRANSPORTATION

DWG. NO. **616.16**

p:\4035\dc standard drawings\final\616-16.DGN
Friday, April 03, 2009 AT 12:20 PM

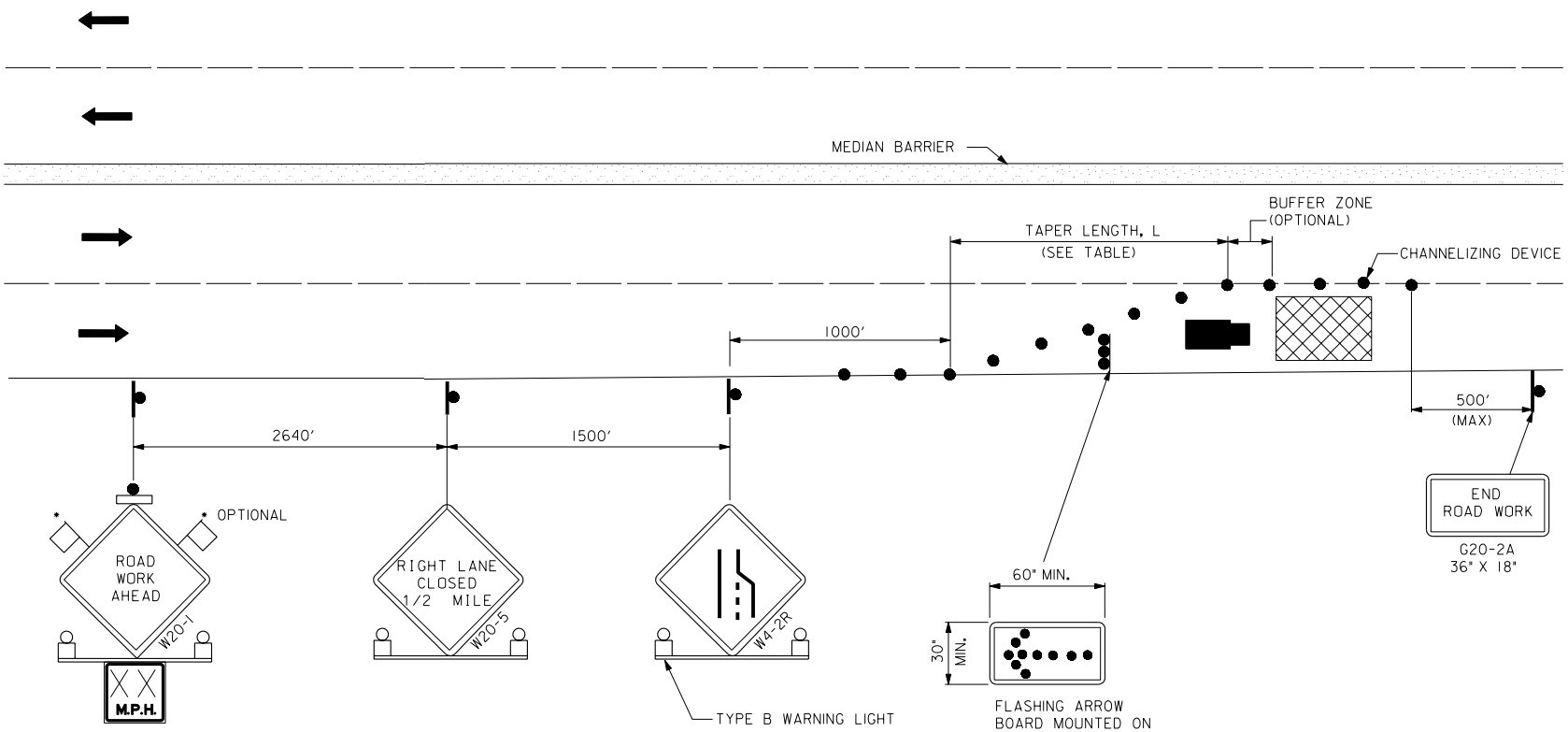

TYPICAL FREEWAY - WARNING SIGN SIZE 48" x 48"

FLASHING ARROW BOARD MOUNTED ON TRUCK OR TRAILER TYPE B TO BE USED ON HIGH SPEED ROADWAYS (60" x 30").

NOTES:

1. FLASHING WARNING LIGHTS TYPE B SHALL BE USED AS DIRECTED.
2. PAVEMENT MARKINGS NO LONGER APPLICABLE SHALL BE REMOVED BEFORE NEW TRAFFIC CONTROL PATTERNS ARE PLACED INTO EFFECT, TEMPORARY MARKINGS SHALL BE USED AS NECESSARY.
3. DIMENSIONS SHOWN ARE TYPICAL UNLESS THERE IS AN APPROVED TRAFFIC CONTROL PLAN IN EFFECT.
4. TYPE OF WARNING DEVICE TO BE USED SHALL BE SHOWN ON THE TRAFFIC CONTROL PLAN OR STATED IN THE SPECIAL PROVISIONS.
5. AN ADVISORY SPEED PLATE SHALL BE PLACED ON THE FIRST WARNING SIGN.
6. TRAFFIC CONTROL DEVICE PLACEMENT SHALL CONFORM TO THE MUTCD PART VI. ALL DEVICES SHALL BE NCHRP REPORT 350 APPROVED FOR CLASS 1 AND 2.

TO DETERMINE L

*SPEED (MPH)	FORMULA
40 OR LESS	$L = \frac{WS^2}{60}$
45 OR GREATER	L= W x S

W= ACTUAL WIDTH OF CLOSURE
S= SPEED

LEGEND:

- ARROW PANEL
- TRAFFIC DRUMS /CONES
- WORK SITE
- SIGN
- DIRECTION OF TRAFFIC
- TRUCK MOUNTED ATTENUATOR

*SPEED IS THE POSTED SPEED LIMIT, THE OFF PEAK 85TH PERCENTILE SPEED PRIOR TO ROAD WORK, OR THE ANTICIPATED OPERATING SPEED.

DATE	APPR.	REFERENCE
REVISED		
ISSUED:		

RECOMMENDED: DEPUTY CHIEF ENGINEER

APPROVED: CHIEF TRANSPORTATION ENGINEER

TYPICAL TCP FOR SINGLE LANE CLOSURE FREEWAY

DISTRICT OF COLUMBIA
DEPARTMENT OF TRANSPORTATION

DWG. NO. 616.17

p:\4035\dc standard drawings\final\616-17.DGN
Friday, April 03, 2009 AT 12:20 PM

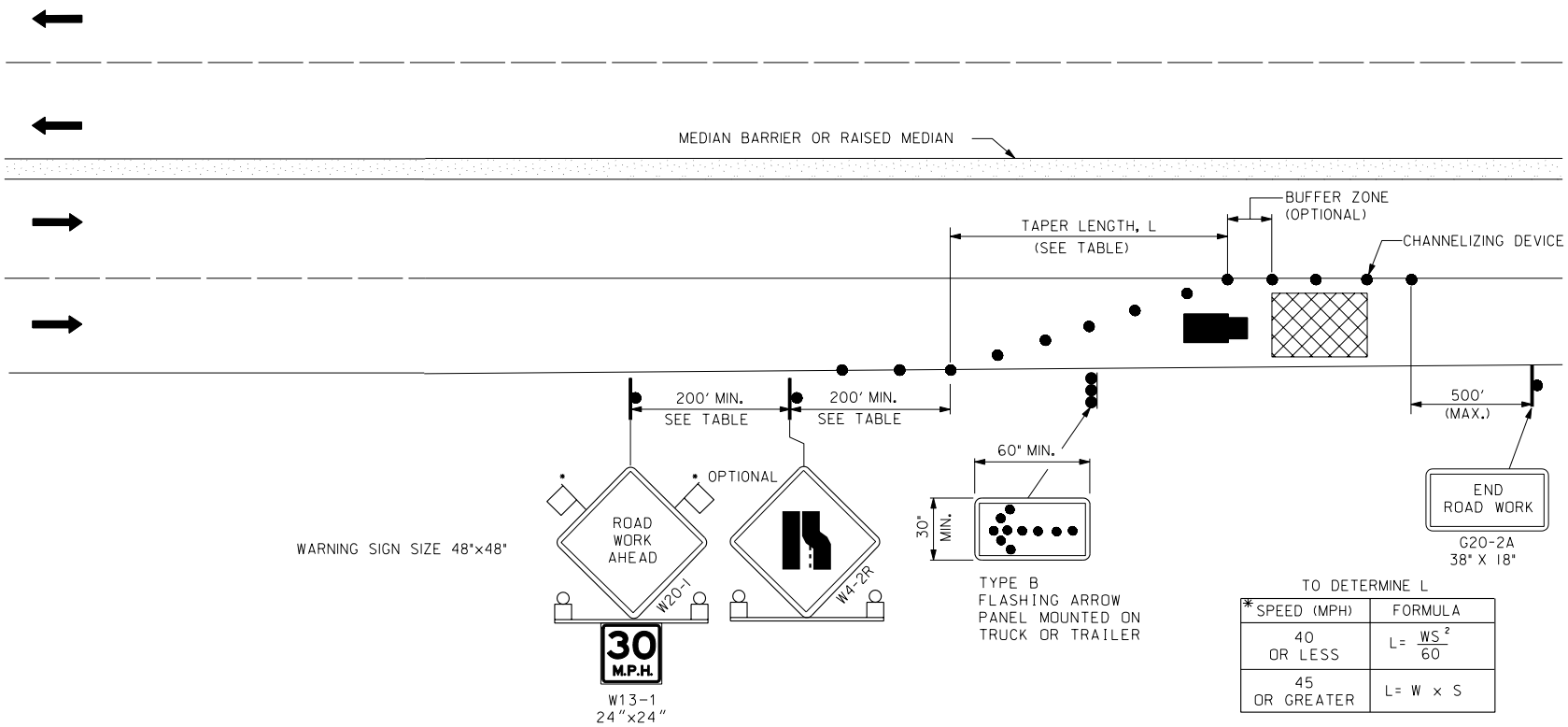

TO DETERMINE L

*SPEED (MPH)	FORMULA
40 OR LESS	$L = \frac{WS^2}{60}$
45 OR GREATER	$L = W \times S$

W= ACTUAL WIDTH OF CLOSURE
S= SPEED IS THE POSTED SPEED LIMIT OR OFF-PEAK 85TH PERCENTILE SPEED PRIOR TO WORK STARTING.

NOTES:

1. FLASHING WARNING LIGHTS TYPE B SHALL BE USED ON ADVANCE WARNING SIGNS AND AT BEGINNING OF TAPER.
2. PAVEMENT MARKINGS NO LONGER APPLICABLE SHALL BE REMOVED BEFORE NEW TRAFFIC CONTROL PATTERNS ARE PLACED INTO EFFECT. TEMPORARY MARKINGS SHALL BE USED AS NECESSARY.
3. DIMENSIONS SHOWN ARE TYPICAL UNLESS THERE IS AN APPROVED TRAFFIC CONTROL PLAN IN EFFECT.
4. TYPE OF WARNING DEVICE TO BE USED SHALL BE SHOWN ON THE TRAFFIC CONTROL PLAN OR STATED IN THE SPECIAL PROVISIONS.
5. AN ADVISORY SPEED PLATE SHALL BE PLACED ON THE FIRST WARNING SIGN.
6. TRAFFIC CONTROL DEVICE PLACEMENT SHALL CONFORM TO THE MUTCD PART VI. ALL DEVICES SHALL BE NCHRP REPORT 350 APPROVED FOR CLASS 1 AND 2.

LEGEND:

- ARROW PANEL
- TRAFFIC DRUMS /CONES
- WORK SITE
- SIGN
- DIRECTION OF TRAFFIC
- TRUCK MOUNTED ATTENUATOR

DATE	APPR.	REFERENCE
REVISED		
ISSUED:		

RECOMMENDED: DEPUTY CHIEF ENGINEER

APPROVED: CHIEF TRANSPORTATION ENGINEER

TYPICAL SINGLE LANE CLOSURE UNCONTROLLED ACCESS ROADS

DISTRICT OF COLUMBIA
DEPARTMENT OF TRANSPORTATION

DWG. NO. 616.18

p:\4035\dc standard drawings\final\616-18.DGN
Friday, April 03, 2009 AT 12:20 PM

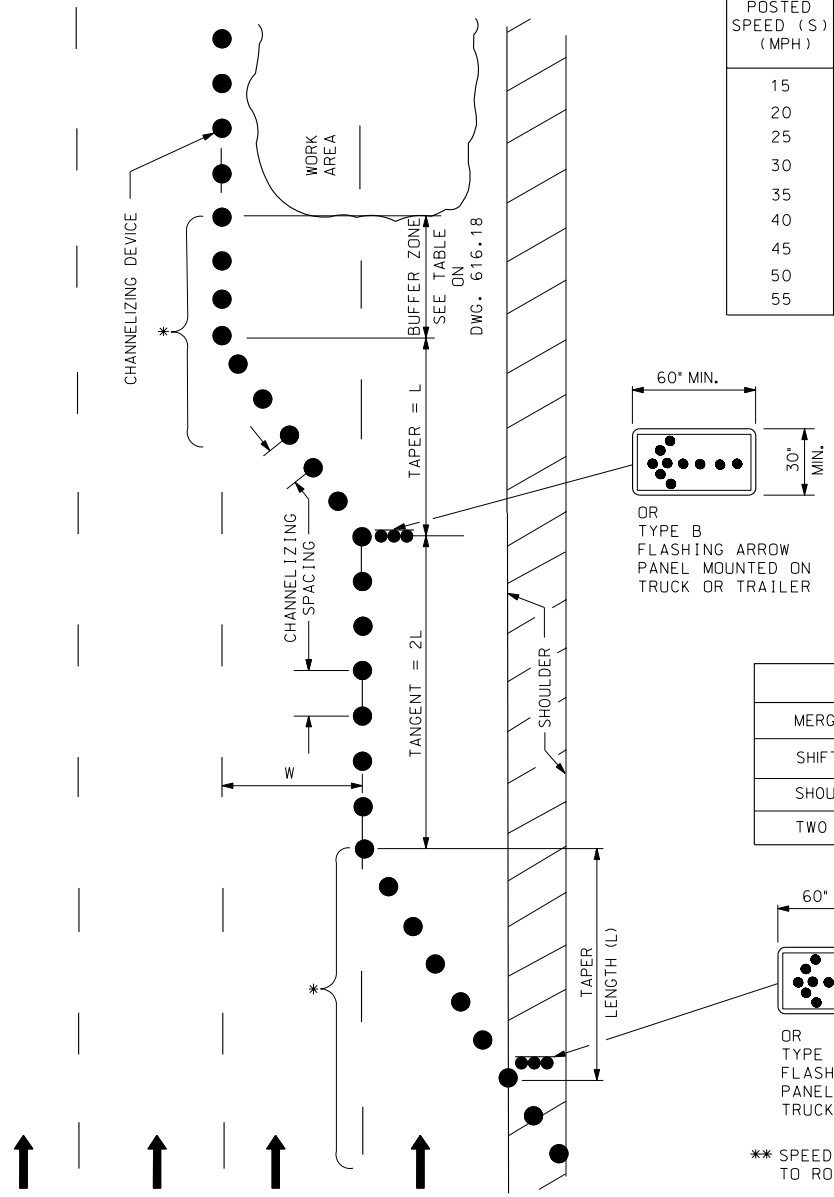

POSTED SPEED (S) (MPH)	MIN. TAPER LENGTHS (L) FOR LANE CLOSURE WIDTHS (W) 10 FT.	11 FT.	12 FT.	CHANNELIZING SPACING-TAPER (APPROX.) (FT.)	CHANNELIZING SPACING-TANGENT (APPROX.) (FT.)
15	37	41	45	15	30
20	67	73	80	20	40
25	104	115	125	25	50
30	150	165	180	30	60
35	204	225	245	35	70
40	267	293	320	40	80
45	450	496	540	45	90
50	500	550	600	50	100
55	550	605	660	55	100

OR
TYPE B
FLASHING ARROW
PANEL MOUNTED ON
TRUCK OR TRAILER

NOTES:

* 1. CONFLICTING LANE MARKINGS SHALL BE REMOVED AS DIRECTED BY THE ENGINEER.

2. DIMENSIONS SHOWN ARE TYPICAL UNLESS THERE IS A TRAFFIC CONTROL PLAN IN EFFECT.

3. CHANNELIZING DEVICES MAY BE CONES OR DRUMS UNLESS OTHERWISE SPECIFIED.

4. ON FREEWAYS, FLASHING ARROW PANEL SHALL BE USED AT EACH LANE CLOSURE.

TYPES OF TAPERS

TYPE	LENGTH
MERGING (LANE CLOSURE)	L
SHIFTING	1/2 L
SHOULDER	1/3 L
TWO WAY TRAFFIC	100 FT.

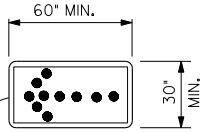

OR
TYPE B
FLASHING ARROW
PANEL MOUNTED ON
TRUCK OR TRAILER

** SPEED IS THE POSTED SPEED LIMIT, THE OFF-PEAK 85TH PERCENTILE SPEED PRIOR TO ROAD WORK OR, THE ANTICIPATED OPERATING SPEED.

DATE	APPR.	
REVISED		
ISSUED:		
		REFERENCE

RECOMMENDED: DEPUTY CHIEF ENGINEER

APPROVED: CHIEF TRANSPORTATION ENGINEER

MULTIPLE LANE CLOSURE TAPER LENGTHS

DISTRICT OF COLUMBIA
DEPARTMENT OF TRANSPORTATION

DWG. NO. 616.19

p:\4035\dc standard drawings\final\UNCHANGED\616-19.DGN
Friday, April 03, 2009 AT 12:20 PM

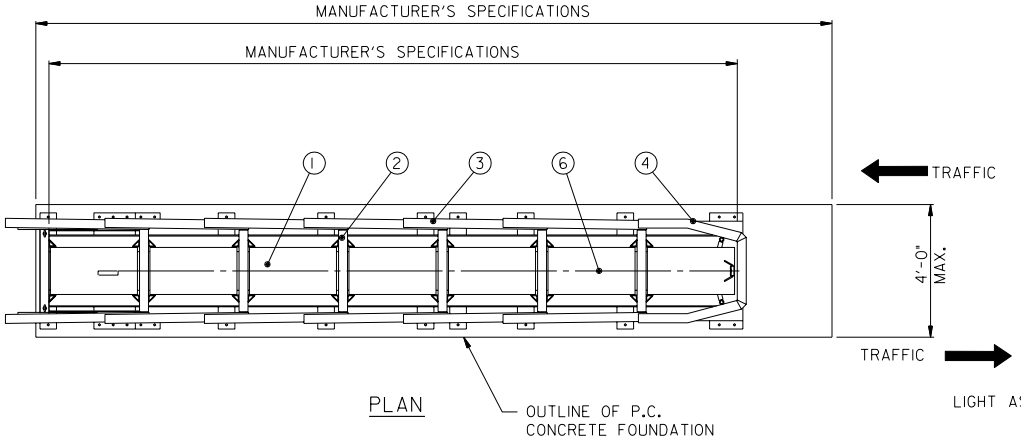

PLAN

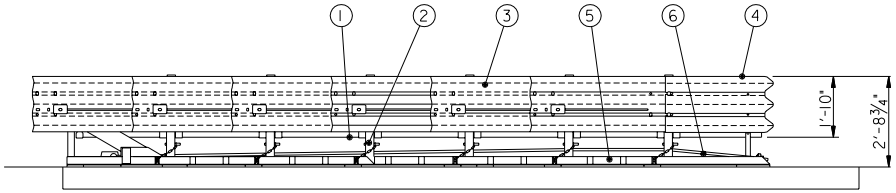

ELEVATION
LEFT SIDE

CONSTRUCTION CRASH CUSHION

NOTES:

1. CRASH CUSHION SHALL BE INSTALLED ACCORDING TO MANUFACTURER'S SPECIFICATIONS.
2. NUMBER OF CARTRIDGES (BAYS) SHALL BE DETERMINED BY THE DESIGN SPEED (6 BAY SHOWN).
3. TRANSITION PANELS FOR THE SPECIFIC SITE BACKUP WALL SHALL BE SUPPLIED WITH THE CRASH CUSHION.
4. REFLECTORIZED TAPE ON NOSE OF CRASH CUSHION TO BE SPECIFIED IN THE SPECIAL PROVISIONS.
5. CROSS SLOPE OF UNIT NOT TO EXCEED 5%.

KEY

1. CRUSHABLE CARTRIDGE
2. DIAPHRAGM
3. FENDER PANEL
4. NOSE COVER
5. RAIL
6. BASE PLATE

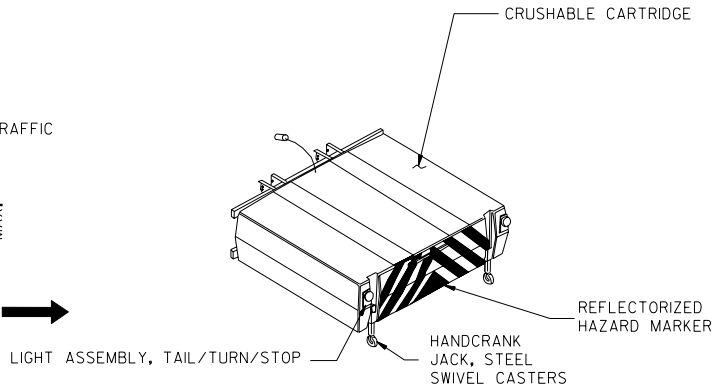

AS REQUIRED BY THE FEDERAL MOTOR VEHICLES SAFETY STANDARDS (FMUSS) 108.

WIDTH: 95" MAX.
APPROXIMATE WEIGHT 1,400 LBS. (TYP.)
ROAD CLEARANCE: 11-13 INCHES (TYP.)

NOTES:

1. THE TMA SHALL BE DESIGNED FOR INSTALLATION AT THE BACK OF TRUCKS WITH A 10,000 TO 35,000 LB. GROSS VEHICLE WEIGHT RATING.
2. ROLL DISTANCE OF THE TRUCK AND TMA COMBINED SHALL BE DESIGNED IN ACCORDANCE WITH TEST VEHICLE WEIGHTS AND SPEEDS AS SPECIFIED IN NCHRP #350, TL-3.

TYPICAL TRUCK MOUNTED ATTENUATOR (TMA)

DATE	APPR.	REFERENCE
REVISED		
ISSUED:		

RECOMMENDED: DEPUTY CHIEF ENGINEER

APPROVED: CHIEF TRANSPORTATION ENGINEER

CONSTRUCTION ZONE CRASH CUSHION AND TRUCK MOUNTED ATTENUATOR (TMA)

d. DISTRICT OF COLUMBIA
DEPARTMENT OF TRANSPORTATION

DWG. NO. 616.20

p:\4035\dc standard drawings\final\UNCHANGED\616-20.DGN
Friday, April 03, 2009 AT 12:20 PM

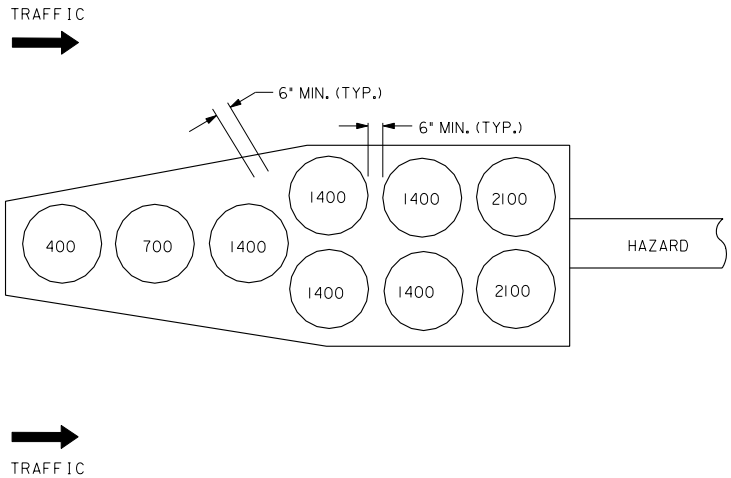

DESIGN SPEED = 40 M.P.H.

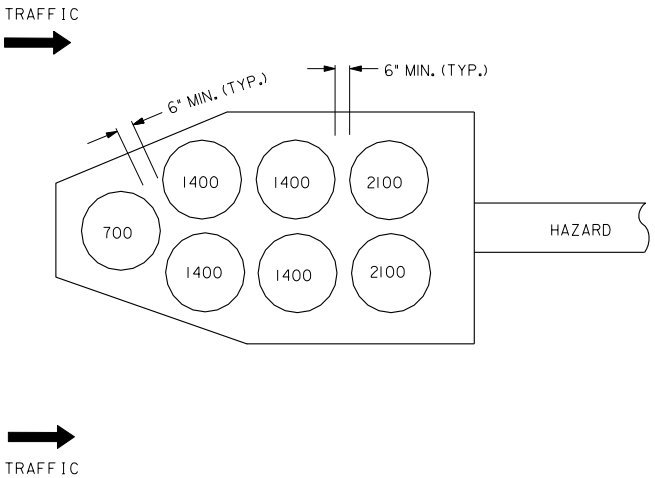

DESIGN SPEED = 30 M.P.H.

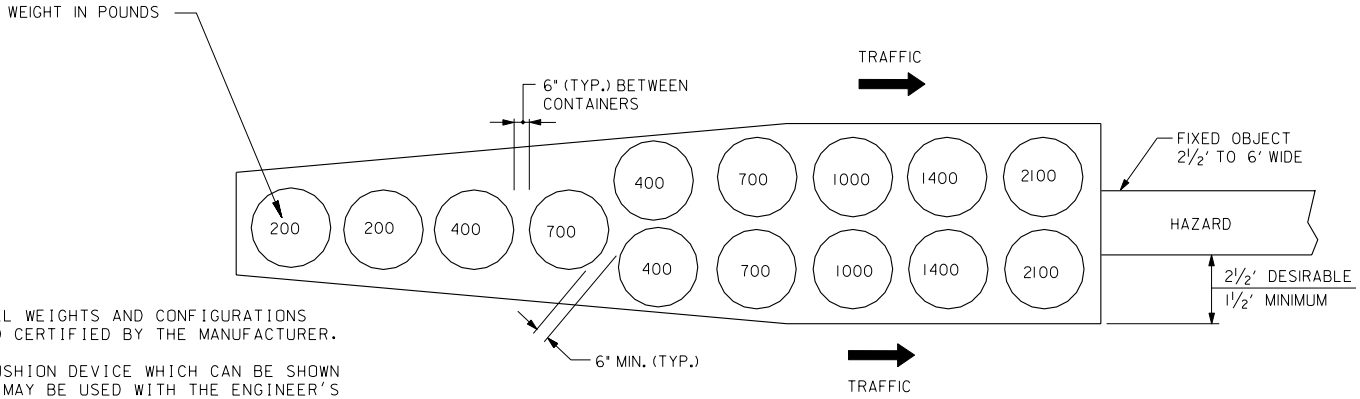

DESIGN SPEED = 50 M.P.H.

NOTES:

1. THE SAND FILLED BARREL WEIGHTS AND CONFIGURATIONS SHALL BE DESIGNED AND CERTIFIED BY THE MANUFACTURER.
2. ANY PORTABLE CRASH CUSHION DEVICE WHICH CAN BE SHOWN TO BE EQUAL OR SAFER MAY BE USED WITH THE ENGINEER'S APPROVAL.
3. REFLECTORIZED TAPE ON FIRST BARREL MAY BE SPECIFIED IN THE SPECIAL PROVISIONS.
4. SAND SHALL BE LOOSE IN COLD WEATHER, ADDITIVE MUST BE USED TO KEEP SAND FROM FREEZING.
5. CRASH CUSHION SHALL CONFORM TO THE REQUIREMENTS OF NCHRP REPORT 350, TL-2 AND TL-3.

DATE	APPR.	REFERENCE
REVISED		
ISSUED:		

RECOMMENDED: DEPUTY CHIEF ENGINEER

APPROVED: CHIEF TRANSPORTATION ENGINEER

CRASH CUSHION INERTIAL SYSTEM UNIDIRECTIONAL

d. DISTRICT OF COLUMBIA
DEPARTMENT OF TRANSPORTATION

DWG. NO. **616.21**

p:\4035\dc standard drawings\final\UNCHANGED\616-21.DGN
Friday, April 03, 2009 AT 12:20 PM

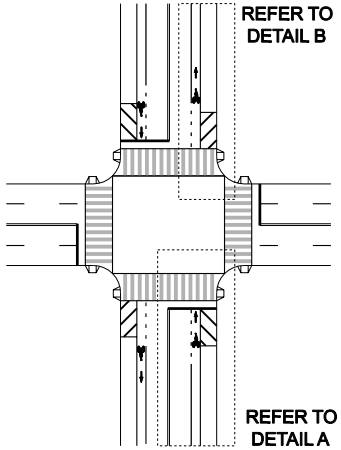

NOTES:

1. TRANSVERSE LINE SHALL MATCH NO PARKING SIGN IF PROVIDE. SEE CHAPTER 46 IN DESIGN AND ENGINEERING MANUAL FOR PARKING DESIGN CRITERIA.

2. SEE DETAIL 616-25. LOCATE ARROW 1' FROM STOP LINE IF NO DETECTOR IS PRESENT.

3. USE DASH LINE WHEN VEHICULAR RIGHT TURNS ARE ALLOWED (FROM ADJACENT ROADWAY), OTHERWISE UTILIZE SOLID LINE. 6" WHITE, DASHED BIKE LANE STRIPE - 2' SOLID WITH 4' GAP

4. SEE DETAIL 616-25. PLACE NEAR BEGINNING OF PARKING ZONE OUTSIDE OF TURNING VEHICLE WHEEL TRACK.

5. SYMBOLS SHALL BE PLACED AFTER EACH INTERSECTION. SYMBOLS MAY BE PLACED EVERY 250' THEREAFTER.

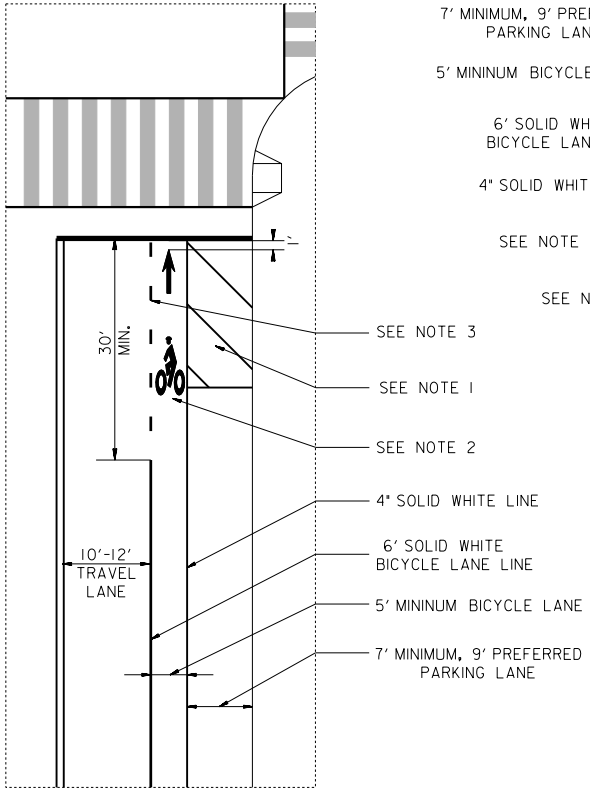

DETAIL A
BICYCLE LANE STRIPING
NEAR SIDE OF INTERSECTION

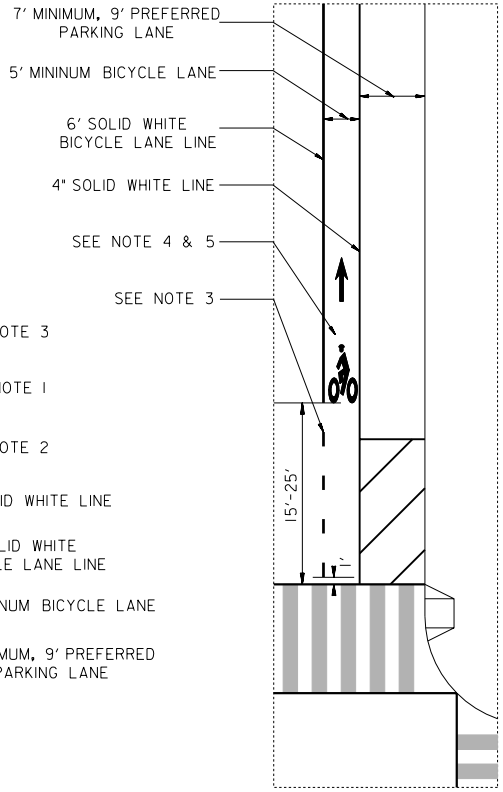

DETAIL B
BICYCLE LANE STRIPING
FAR SIDE OF INTERSECTION

DATE	APPR.	REFERENCE
REVISED		
ISSUED:		

RECOMMENDED: DEPUTY CHIEF ENGINEER

APPROVED: CHIEF TRANSPORTATION ENGINEER

BICYCLE TREATMENT
AT INTERSECTION
DETAIL A & B

d. DISTRICT OF COLUMBIA
DEPARTMENT OF TRANSPORTATION

DWG. NO. 616.22

p:\4035\dc standard drawings\final\616-22.NEW.dgn
Friday, April 03, 2009 AT 12:20 PM

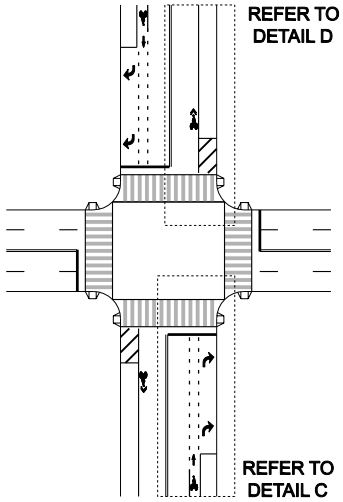

NOTES:

1. TRANSVERSE LINE SHALL MATCH NO PARKING SIGN IF PROVIDE. SEE CHAPTER 46 IN DESIGN AND ENGINEERING MANUAL FOR PARKING DESIGN CRITERIA.

2. SEE DETAIL 616-25. LOCATE SYMBOL ADJACENT TO BEGINNING OF RIGHT TURN LANE.

3. SEE DETAIL 616-25. PLACE NEAR BEGINNING OF PARKING ZONE OUTSIDE OF TURNING VEHICLE WHEEL TRACK.

4. SYMBOLS SHALL BE PLACED AFTER EACH INTERSECTION. SYMBOLS MAY BE PLACED EVERY 250' THEREAFTER.

5. IF USED ON ROADWAYS WITH ON-STREET PARKING, SYMBOLS SHALL BE PLACED SO THAT THEIR CENTERS ARE A MINIMUM OF 11' FROM THE ADJACENT CURBFACE.

6. SYMBOLS PLACED IN A SHARED LANE WITHOUT PARKING SHALL BE PLACED SO THAT THEIR CENTERS ARE A MINIMUM OF 4' FROM THE ADJACENT CURBFACE.

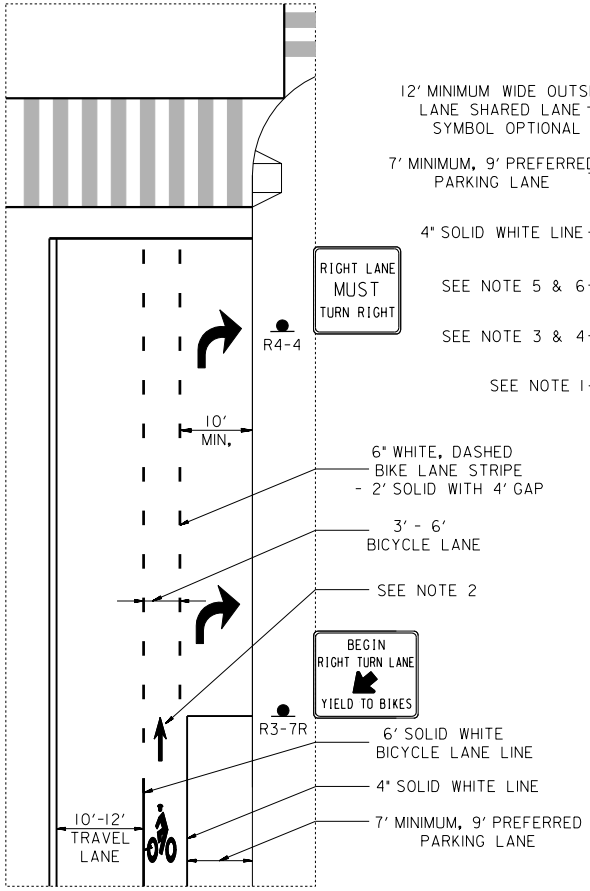

DETAIL C
BICYCLE LANE STRIPING ADJACENT
TO SEPARATE RIGHT TURN LANE

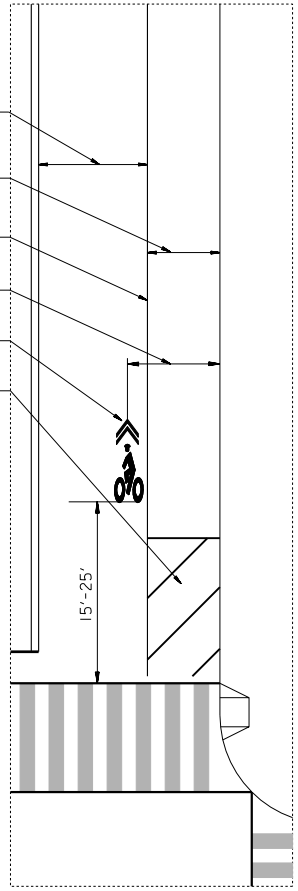

DETAIL D
BICYCLE LANE STRIPING
SHARED LANE SYMBOL PLACEMENT

DATE	APPR.	REFERENCE
REVISED		
ISSUED:		

RECOMMENDED: DEPUTY CHIEF ENGINEER

APPROVED: CHIEF TRANSPORTATION ENGINEER

BICYCLE TREATMENT
AT INTERSECTION
DETAIL C & D

d. DISTRICT OF COLUMBIA
DEPARTMENT OF TRANSPORTATION

DWG. NO. 616.23

p:\4035\dc standard drawings\final\616-23.NEW.dgn
Friday, April 03, 2009 AT 12:20 PM

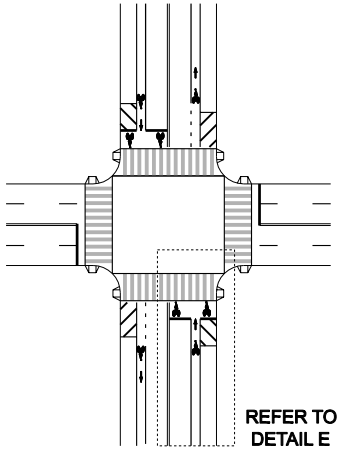

NOTES:

1. TRANSVERSE LINE SHALL MATCH NO PARKING SIGN IF PROVIDE. SEE CHAPTER 46 IN DESIGN AND ENGINEERING MANUAL FOR PARKING DESIGN CRITERIA.

2. SEE DETAIL 616-25. SYMBOLS SHALL BE PLACED AFTER EACH INTERSECTION. SYMBOLS MAY BE PLACED EVERY 250' THEREAFTER.

3. PLACE MULTIPLE SYMBOLS WITHOUT ARROW TO IDENTIFY BICYCLE BOX. UTILIZE WHERE BICYCLISTS ARE EXPERIENCING CONFLICTS WITH VEHICULAR TURNING MOVEMENTS.

4. PLACE 8' - 10' IN ADVANCE OF CROSSWALK WITH R10-6A SIGN. BREAK STOP LINE AT BICYCLE LANE.

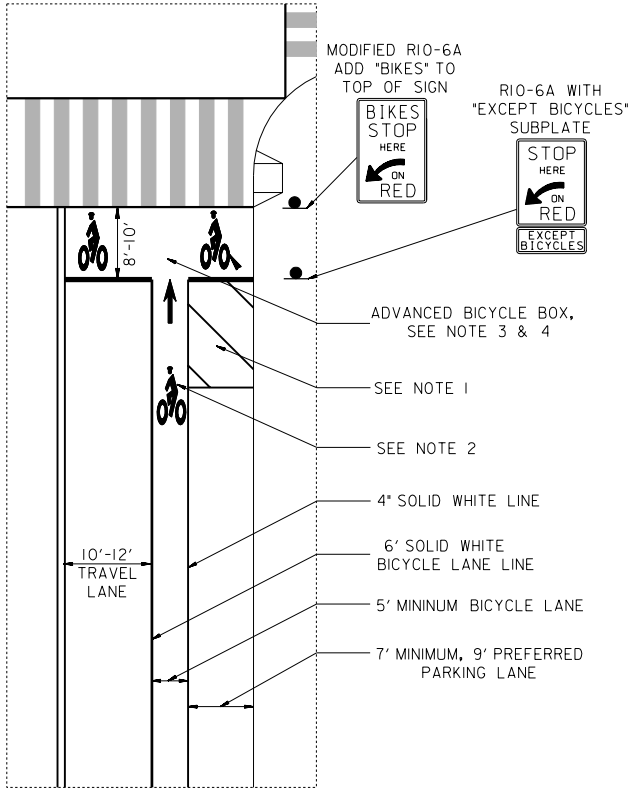

DETAIL E
EXPERIMENTAL ADVANCED BICYCLE BOX
AT SIGNALIZED INTERSECTIONS

p:\4035\dc standard drawings\final\616-24.NEW.dgn
Friday, April 03, 2009 AT 12:20 PM

DATE	APPR.	
REVISED		
ISSUED:		
		REFERENCE

RECOMMENDED: DEPUTY CHIEF ENGINEER

APPROVED: CHIEF TRANSPORTATION ENGINEER

BICYCLE TREATMENT
AT INTERSECTION
DETAIL E

d. DISTRICT OF COLUMBIA
DEPARTMENT OF TRANSPORTATION

DWG. NO. 616.24

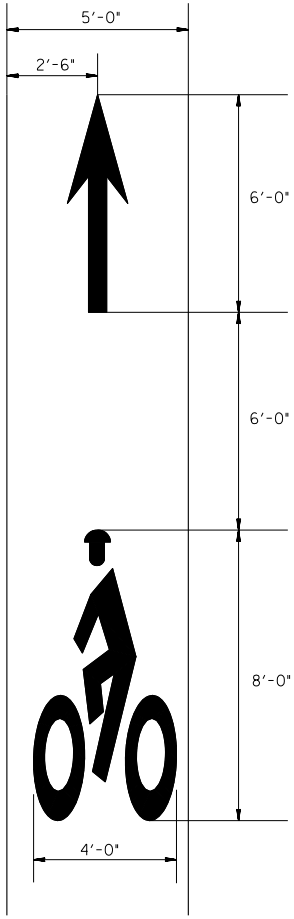

BIKE LANE SYMBOL

BIKE LANE SYMBOL SHALL HAVE A
BIKER FACING LEFT OR CENTER OF ROAD

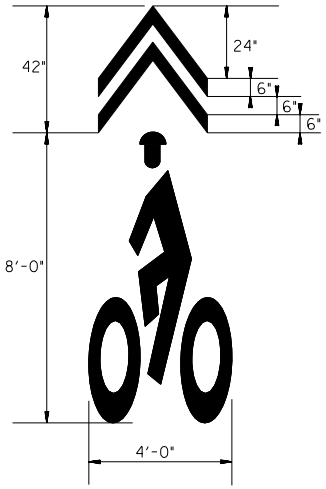

SHARED LANE SYMBOL

R4-4

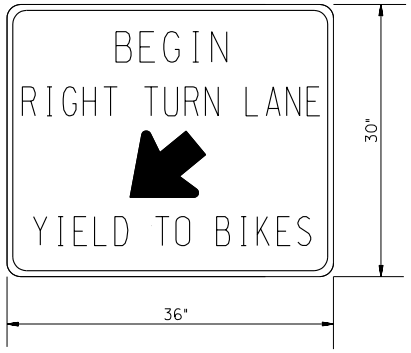

D11-1 & D1-1A

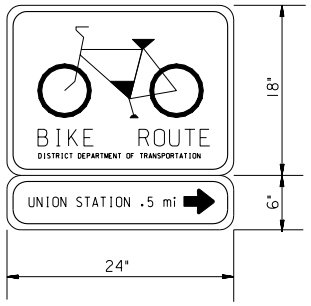

R4-4 GUIDANCE:
IF USED, BEGIN RIGHT TURN LANE - YIELD TO BIKES (R4-4) SIGNS SHOULD BE PROVIDED AT THE BEGINNING OF A RIGHT TURN LANE TO INFORM BICYCLISTS AND MOTORISTS OF THE MERGING AREA. THESE SIGNS SHOULD ONLY BE INSTALLED AT LOCATIONS WHERE THERE IS A DEDICATED RIGHT TURN AREA (BUSES MAY BE EXCEPTED). THEY SHOULD ALWAYS BE INSTALLED WHERE THERE IS A DEDICATED BICYCLE FACILITY MARKED AS A BICYCLE LANE OR SHARED ROADWAY.

R4-4 SIGN DESIGN:
SOURCE: STANDARD MUTCD
SIZE: 36"x30"
COLOR: BLACK LETTERS ON WHITE REFLECTIVE BACKGROUND

D11-1 GUIDANCE:
BICYCLE ROUTE GUIDE (D11-1) SIGNS SHOULD BE PROVIDED AT DECISION POINTS ALONG DESIGNATED BICYCLE ROUTES, INCLUDING SIGNS TO INFORM BICYCLISTS OF BICYCLE ROUTE DIRECTION CHANGES AND CONFIRMATION SIGNS FOR ROUTE DIRECTION, DISTANCE, AND DESTINATION.

D11-1 SIGN DESIGN:
SOURCE: MODIFIED MUTCD
SIZE: 18"x24"
COLOR: WHITE LETTERS ON GREEN REFLECTIVE BACKGROUND

D1-1A GUIDANCE:
DESTINATION (D1-1 AND D1-1A) SIGNS SHALL BE MOUNTED BELOW BICYCLE ROUTE GUIDE SIGNS TO FURNISH ADDITIONAL INFORMATION SUCH AS DIRECTIONAL CHANGES IN ROUTE, OR INTERMITTENT DISTANCE AND DESTINATION INFORMATION.

D1-1A SIGN DESIGN:
SOURCE: STANDARD MUTCD
SIZE: 6"x24"
COLOR: WHITE LETTERS ON GREEN REFLECTIVE BACKGROUND

p:\4035\dc standard drawings\final\616-25.NEW.dgn
Friday, April 03, 2009 AT 12:20 PM

DATE	APPR.	REFERENCE
REVISED		
ISSUED:		

RECOMMENDED: DEPUTY CHIEF ENGINEER

APPROVED: CHIEF TRANSPORTATION ENGINEER

DETAILS OF BICYCLE SYMBOLS AND SIGNS

d. DISTRICT OF COLUMBIA
DEPARTMENT OF TRANSPORTATION

DWG. NO. 616.25

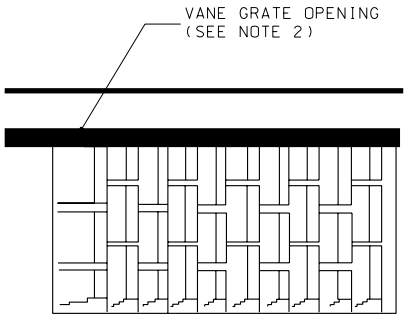

TYPE L

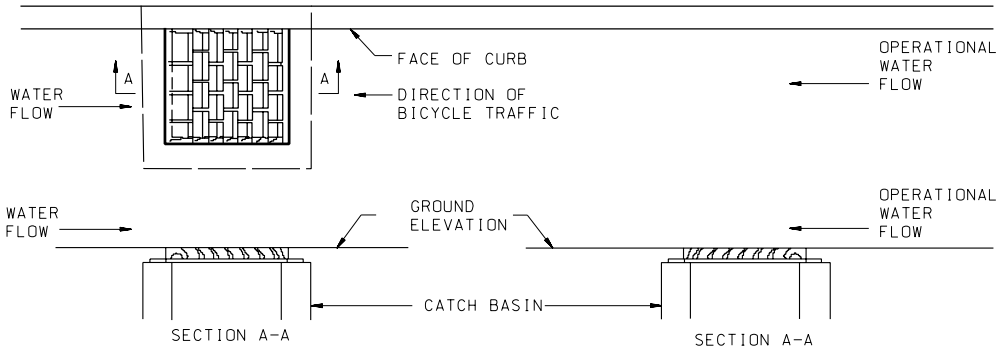

NOTES:
1. GRATE TYPES ARE ONLY CONSIDERED BICYCLE SAFE WITH THE CURB ORIENTATION AS SHOWN.

2. VANE GRATE OPENINGS ARE DESIRABLE IN LOCATIONS WHERE HIGHER HYDRAULIC CAPACITY IS NEEDED. THE GATE MUST BE ORIENTED WITH THE DIRECTION OF FLOW AS SHOWN IN THE DETAIL.

3. GRATE TYPES SHOWN ARE BASED UPON NEENAH FOUNDRY MODEL NUMBERS. OTHER MANUFACTURER GRATES MAY BE INSTALLED IF THEY MEET THE GRATE DESIGN SPECIFICATIONS SHOWN HERE.

DATE	APPR.	REFERENCE
REVISED		
ISSUED:		

RECOMMENDED: DEPUTY CHIEF ENGINEER

APPROVED: CHIEF TRANSPORTATION ENGINEER

BICYCLE SAFE STORMWATER GRATES

DISTRICT OF COLUMBIA
DEPARTMENT OF TRANSPORTATION

DWG. NO. 616.26

p:\4035\dc standard drawings\final\616-26.NEW.dgn
Friday, April 03, 2009 AT 12:20 PM

COVERED WALKWAY STREET SIDE VIEW

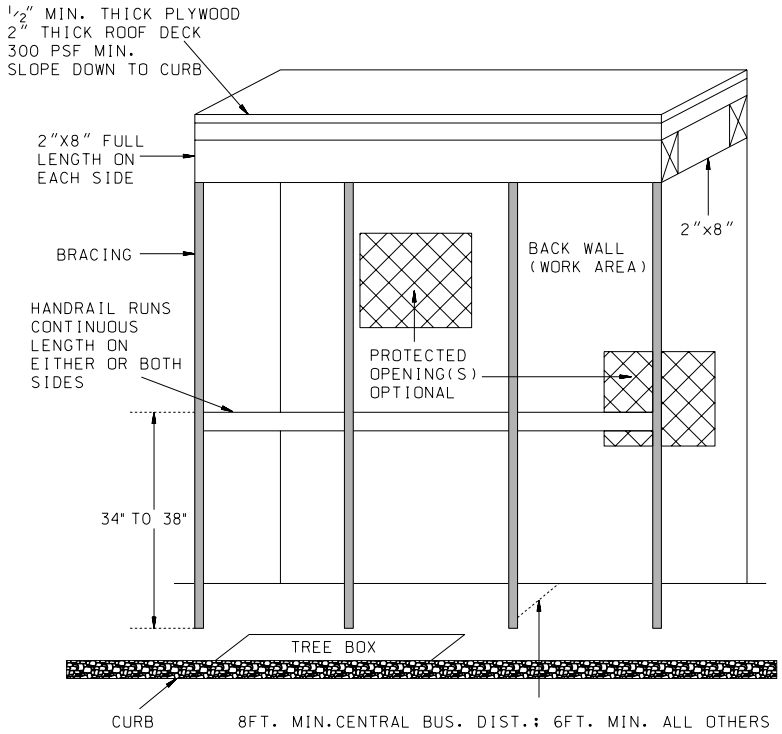

COVERED WALKWAY SIDEWALK END VIEW

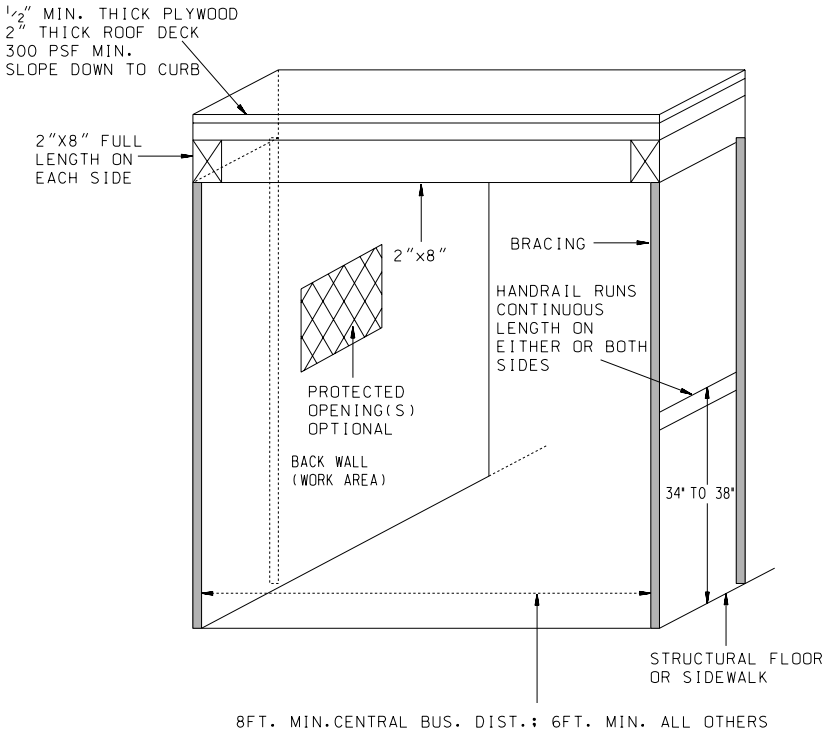

NOTE:
1. IF ALTERNATE MATERIALS FOR WALKWAY ARE PROPOSED CONTRACTOR MUST PROVIDE PE STAMPED SHOP DRAWING DETAIL OF COVERED WALKWAY MEETING LOAD BEARING AND STRUCTURAL SPECIFICATIONS.
2. IF A STRUCTURAL FLOOR IS INSTALLED WALKWAY MUST INCLUDE ADA-COMPLIANT CONTINUOUS RAILINGS AS PER COVERED WALKWAY STANDARDS.
3. THE INTERIOR OF THE COVERED WALKWAY SHALL BE LIGHTED AT ALL TIMES. LIGHTS MUSH BE INSTALLED ON EITHER THE ROOF OR BACK WALL IN VANDAL-PROOF FIXTURES AT LEST 8 FEET FROM THE FLOOR. CONNECTION TO POWER SHOULD BE SUBMITTED FOR PEPCO APPROVAL.
4. THE SIDE OF THE COVERED WALKWAY FACING THE CONSTRUCTION AREA MAY HAVE OPENINGS, AT THE DISCRETION OF THE PERMIT HOLDER AND ADEQUATELY PROTECTED BY SCREENING, THAT ALLOW PEDESTRIANS TO VIEW THE WORK SITE.
5. ALL COVERED WALKWAYS CONSTRUCTED UNDER THIS PROVISION MUST PROVIDE AN ACCESSIBLE PEDESTRIAN ROUTE IN ACCORDING WITH THE REQUIREMENTS OF ADA, INCLUDING STRUCTURAL FLOORS, SLOPE AND COUNTER SLOPE, VERTICAL CLEARANCES, TURNING RADII AND SURFACE AND RAMP CONTINUITY.

DATE	APPR.	REFERENCE
REVISED		
ISSUED:		

RECOMMENDED: DEPUTY CHIEF ENGINEER

APPROVED: CHIEF TRANSPORTATION ENGINEER

COVERED WALKWAY
STANDARD DRAWINGS

d. DISTRICT OF COLUMBIA
DEPARTMENT OF TRANSPORTATION

DWG. NO. **616.27**

p:\4035\dc standard drawings\final\616-27.NEW.dgn
Friday, April 03, 2009 AT 12:20 PM

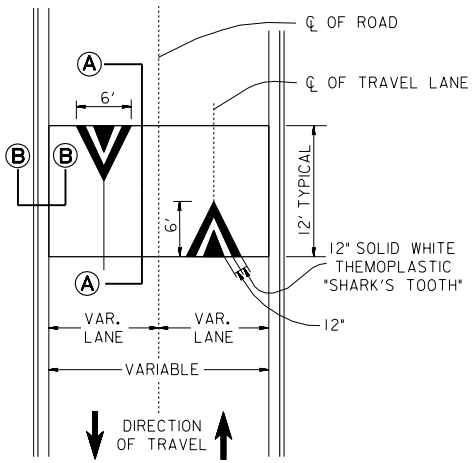

SPEED HUMP (HORIZONTAL)

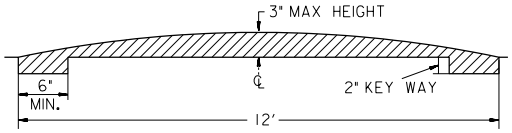

SECTION A–A

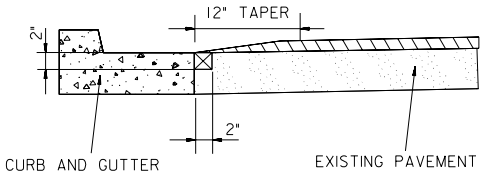

SECTION B–B

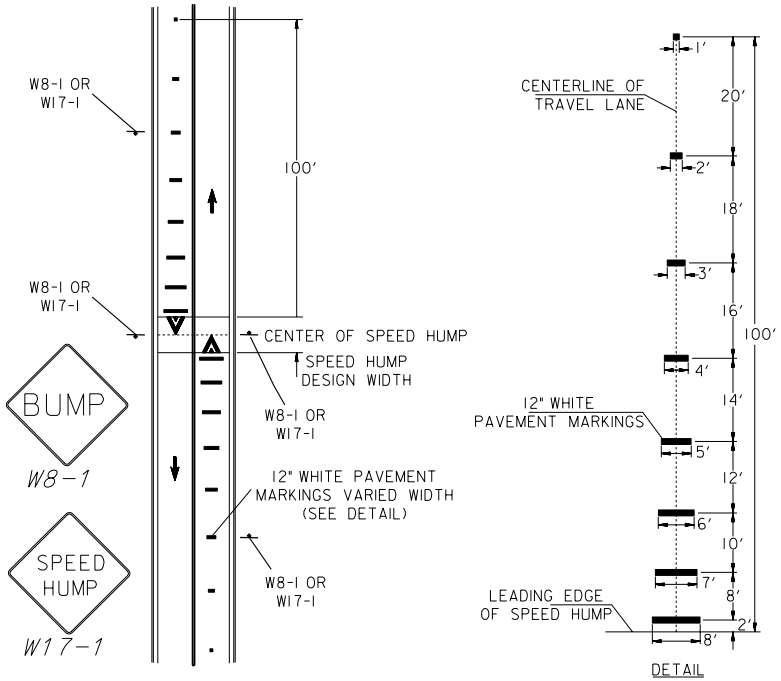

TYPICAL WARNING MARKINGS AND SIGNINGS FOR SPEED HUMP

NOTE:

1. SPEED BUMPS - NARROW MOUNTABLE OBSTRUCTIONS INSTALLED ON THE PAVEMENT SURFACE, ACROSS THE TRAVELED LANES, AND INTENDED TO CAUSE VEHICLES TO SLOW. SPEED BUMPS ARE USUALLY LESS THAN 14 INCHES WIDE AND 4 INCHES HIGH.
2. SPEED HUMPS - THEY ARE SIMILAR TO SPEED BUMPS, BUT UTILIZE LARGER VERTICAL RADII THAT RESULT IN WIDER WIDTHS AND A MORE GENTLE CROSSING BY VEHICLES.
3. SPEED TABLES - WIDE MOUNTABLE OBSTRUCTIONS INSTALLED ON THE PAVEMENT SURFACE ACROSS THE TRAVEL LANES, AND INTENDED TO CAUSE VEHICLES TO SLOW. THEY ARE SIMILAR TO SPEED HUMPS, EXCEPT FOR THE FLAT-TOPPED SECTION LOCATED BETWEEN THE APPROACH AND FAR EDGES. SPEED TABLES ARE GENERALLY WIDER THAN SPEED HUMPS AND ARE MORE GENTLE ON VEHICLES.
4. SPEED BUMPS/HUMPS/TABLES SHOULD NOT BE CONSIDERED ON: EMERGENCY AND EVACUATION ROUTES; ROADWAYS WITH GRADES OF 7% OR MORE; ARTERIALS OR COLLECTOR STREETS AND THROUGH TRUCK ROUTES; AT DRIVEWAY, ENTRANCE AND/OR ALLEY.
5. SPEED BUMPS/HUMPS/TABLES SHOULD NOT BE PLACED WITHIN 150 FEET OF AN UNSIGNALIZED INTERSECTION OR 250 FEET OF A SIGNALIZED INTERSECTION.
6. SPEED BUMPS/HUMPS/TABLES ARE TYPICALLY PLACED 250-350 FEET APART.
7. REFER TO "DESIGN GUIDELINES FOR TRAFFIC CALMING MEASURES FOR RESIDENTIAL STREETS IN THE DISTRICT OF COLUMBIA (JUNE 2005)" FOR ADDITIONAL INFORMATION.

DATE	APPR.	REFERENCE
REVISED		
ISSUED:		

RECOMMENDED: DEPUTY CHIEF ENGINEER

APPROVED: CHIEF TRANSPORTATION ENGINEER

TRAFFIC CALMING SPEED HUMP STANDARD DRAWINGS

DISTRICT OF COLUMBIA
DEPARTMENT OF TRANSPORTATION

DWG. NO. 616.28

p:\4035\dc standard drawings\final\616-28.NEW.dgn
Friday, April 03, 2009 AT 12:20 PM

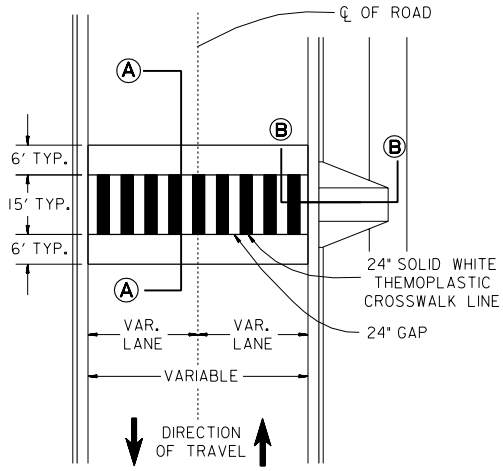

RAISED CROSSWALK (HORIZONTAL)

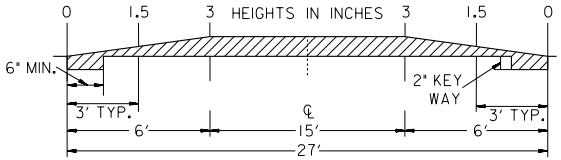

SECTION A–A

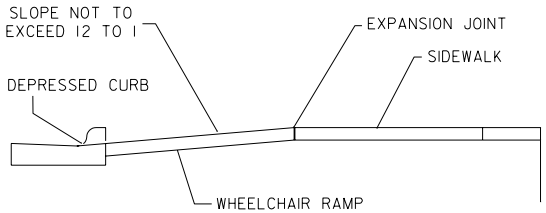

SECTION B–B

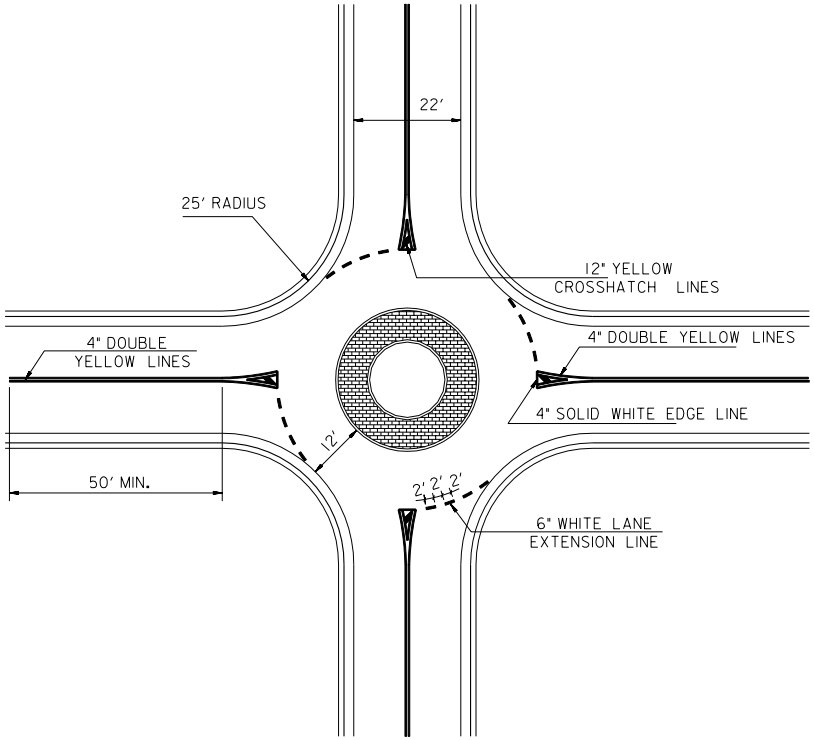

TYPICAL TRAFFIC CIRCLE MARKINGS

NOTE:

1. RAISED CROSSWALK - A TRADITIONAL PEDESTRIAN CROSSING AREA PURPOSELY RAISED ABOVE THE NORMAL PAVEMENT SURFACE LEVEL IN ORDER TO GIVE MOTORIST AND PEDESTRIANS A BETTER VIEW OF THE CROSSING AREA.
2. TRAFFIC CIRCLE - A SMALL CIRCULAR ISLAND, USUALLY LESS THAN 26 FT IN DIAMETER, USED IN MIDDLE OF INTERSECTIONS AND INTENDED TO FORCE VEHICULAR TRAFFIC TO SLOW AND NEGOTIATE AROUND IT. WHEN USED IN RESIDENTIAL AREAS, THEY CAN BE LANDSCAPED FOR AESTHETIC OR BARRIER PURPOSES, AND MAY HAVE MOUNTABLE CURBS TO FACILITATE MOVEMENT OF EMERGENCY VEHICLES.
3. IT IS RECOMMENDED THAT THE "PEDESTRIAN CROSSING WARNING SIGN" W11-2, (MUTCD) BE USED WITH EACH RAISED PEDESTRIAN CROSSING.
4. REFER TO "DESIGN GUIDELINES FOR TRAFFIC CALMING MEASURES FOR RESIDENTIAL STREETS IN THE DISTRICT OF COLUMBIA (JUNE 2005)" FOR ADDITIONAL INFORMATION.

DATE	APPR.	REFERENCE
REVISED		
ISSUED:		

RECOMMENDED: DEPUTY CHIEF ENGINEER

APPROVED: CHIEF TRANSPORTATION ENGINEER

TRAFFIC CALMING
RAISED CROSSWALK AND TYPICAL CIRCLE
STANDARD DRAWINGS

d. DISTRICT OF COLUMBIA
DEPARTMENT OF TRANSPORTATION

DWG. NO. 616.29

p:\4035\dc standard drawings\final\616-29.NEW.dgn
Friday, April 03, 2009 AT 12:20 PM

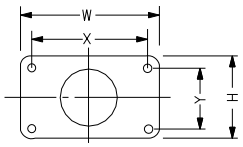

SECTION "A-A"

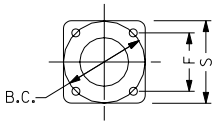

SECTION "B-B"

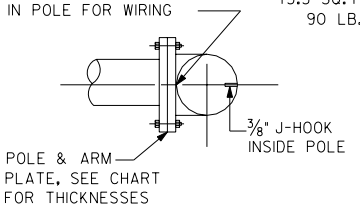

VIEW "C-C"

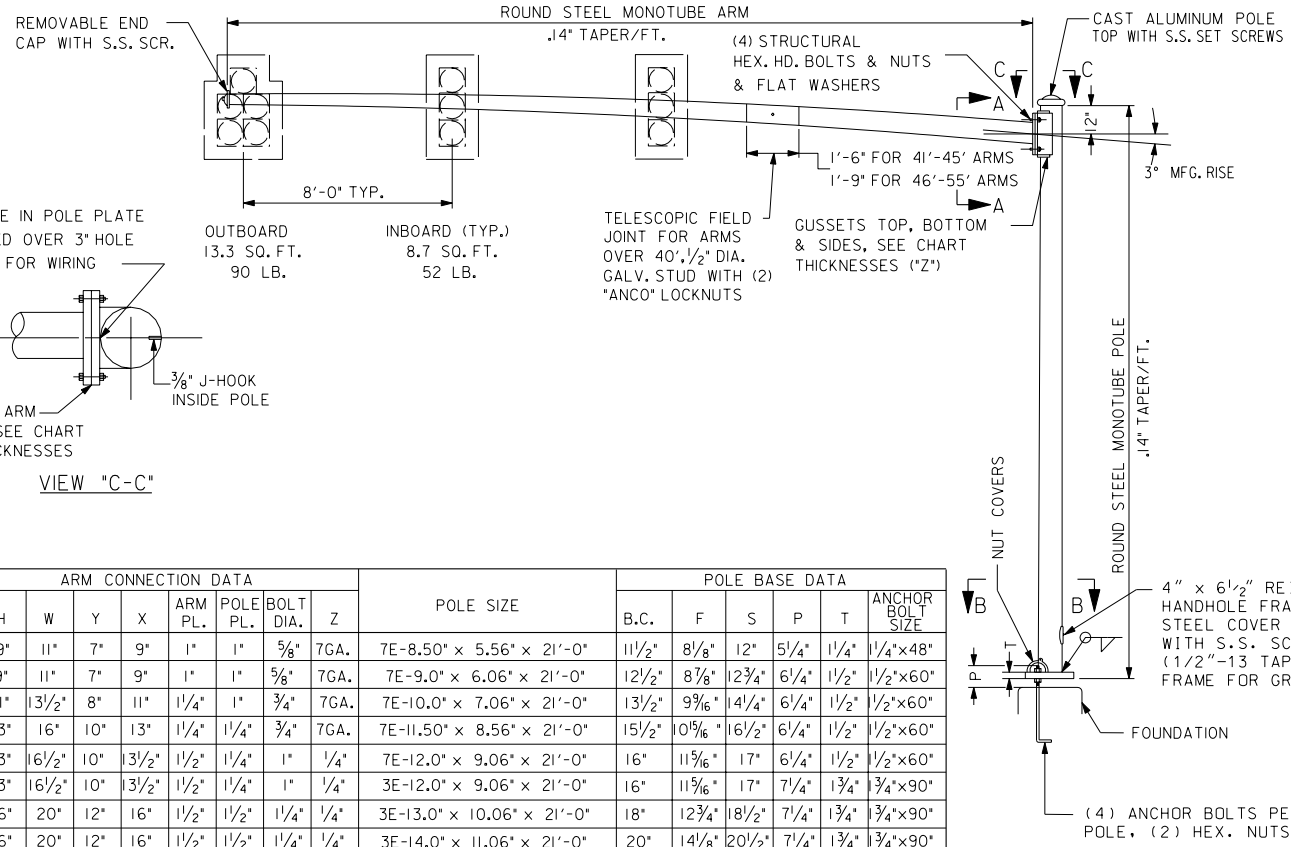

ARM SPREAD (FT.)	INBOARD SIGNAL MAX. QTY.	ARM SIZE	ARM SPREAD RANGE (FT.)	ARM CONNECTION DATA								POLE SIZE	POLE BASE DATA					
				H	W	Y	X	ARM PL.	POLE PL.	BOLT DIA.	Z		B.C.	F	S	P	T	ANCHOR BOLT SIZE
15	1	11E-6.0"	11-15	9"	11"	7"	9"	1"	1"	⅝"	7GA.	7E-8.50" x 5.56" x 21'-0"	11½"	8⅛"	12"	5¼"	1¼"	1¼"x48"
20	1	11E-6.50"	16-20	9"	11"	7"	9"	1"	1"	⅝"	7GA.	7E-9.0" x 6.06" x 21'-0"	12½"	8⅞"	12¾"	6¼"	1½"	1½"x60"
25	2	11E-7.50"	21-25	11"	13½"	8"	11"	1¼"	1"	¾"	7GA.	7E-10.0" x 7.06" x 21'-0"	13½"	9 9/16"	14¼"	6¼"	1½"	1½"x60"
30	2	11E-9.0"	26-30	13"	16"	10"	13"	1¼"	1¼"	¾"	7GA.	7E-11.50" x 8.56" x 21'-0"	15½"	10 15/16"	16½"	6¼"	1½"	1½"x60"
35	3	7E-8.50"	31-35	13"	16½"	10"	13½"	1½"	1¼"	1"	¼"	7E-12.0" x 9.06" x 21'-0"	16"	11 5/16"	17"	6¼"	1½"	1½"x60"
40	3	7E-9.50"	36-40	13"	16½"	10"	13½"	1½"	1¼"	1"	¼"	3E-12.0" x 9.06" x 21'-0"	16"	11 5/16"	17"	7¼"	1¾"	1¾"x90"
45	4	SEE BELOW	41-45	16"	20"	12"	16"	1½"	1½"	1¼"	¼"	3E-13.0" x 10.06" x 21'-0"	18"	12¾"	18½"	7¼"	1¾"	1¾"x90"
50	4		46-50	16"	20"	12"	16"	1½"	1½"	1¼"	¼"	3E-14.0" x 11.06" x 21'-0"	20"	14⅛"	20½"	7¼"	1¾"	1¾"x90"
55	4		51-55	18"	21½"	14"	17½"	1¾"	1¾"	1¼"	5/16"	3E-15.0" x 12.06" x 21'-0"	22"	15 9/16"	23"	8¼"	2"	2"x90"

41-45 { 7E-10.25" x 7.24" x 21'-6"
{ W11E-7.73" x x

46-50 { 7E-11.25" x 7.86" x 24'-3"
{ W11E-8.38" x x

51-55 { 7E-12.50" x 8.76" x 26'-9"
{ W11E-9.28" x x

DESIGN CRITERIA

DESIGNED IN ACCORDANCE WITH THE CURRENT REVISION OF AASHTO "STANDARD SPECIFICATIONS FOR STRUCTURAL SUPPORTS FOR HIGHWAY SIGNS, LUMINAIRES AND TRAFFIC SIGNALS "FOR 80 M.P.H. WIND ZONE TO SUPPORT FIXED SIGNALS WITH BACK PLATES, ACTUAL AREAS AS SHOWN.

DATE	APPR.	
REVISED		
ISSUED:		
		REFERENCE

RECOMMENDED: DEPUTY CHIEF ENGINEER

APPROVED: CHIEF TRANSPORTATION ENGINEER

TRAFFIC SIGNAL POLE MAST ARM

d. DISTRICT OF COLUMBIA
DEPARTMENT OF TRANSPORTATION

DWG. NO. 617.01

p:\4035\dc standard drawings\final\UNCHANGED\617-01.DGN
Friday, April 03, 2009 AT 12:20 PM

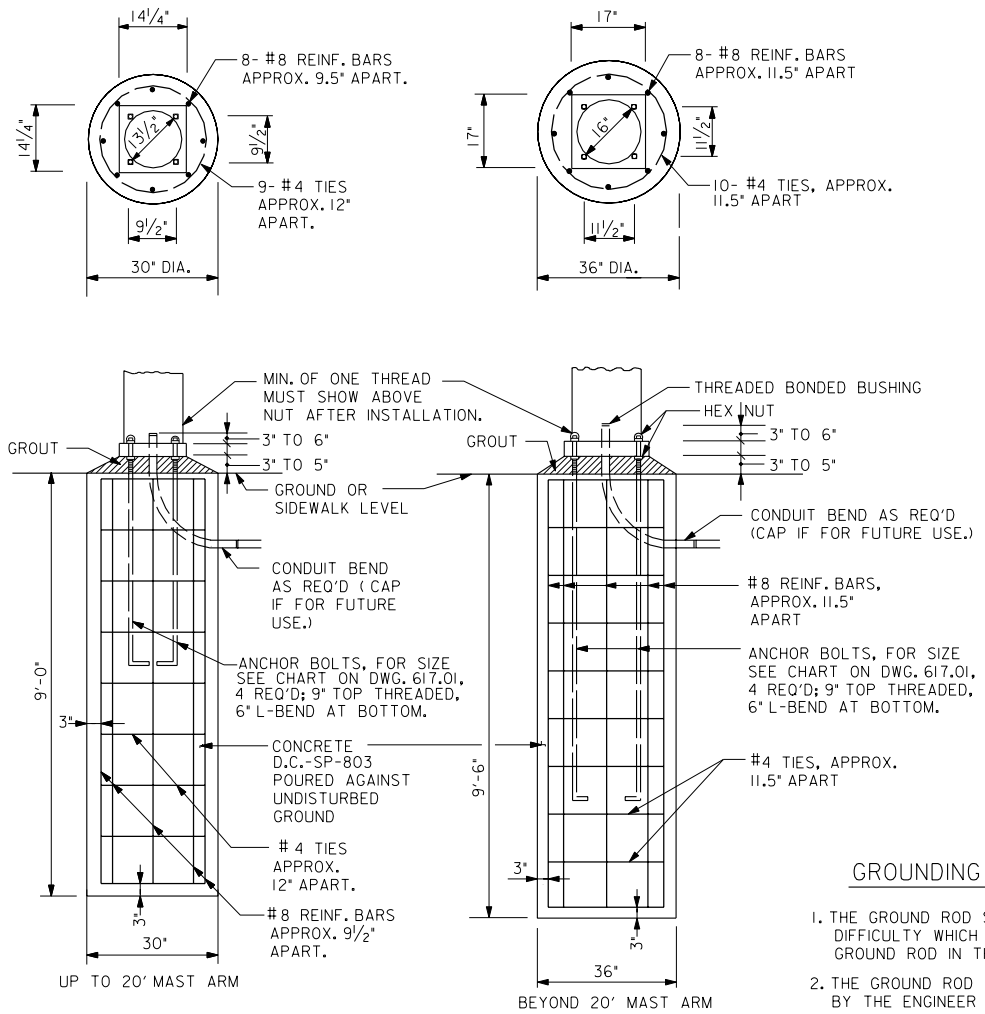

MAST ARM POLE FOUNDATION

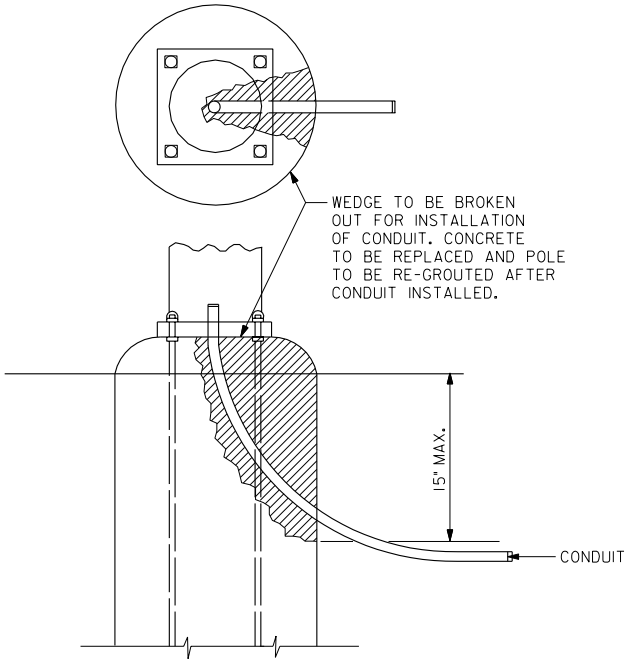

METHOD OF CONDUIT ENTRANCE INTO EXISTING POLE FOUNDATION

GROUNDING NOTES FOR MAST ARM POLE FOUNDATIONS

1. THE GROUND ROD SHALL NOT BE INCLUDED WITHIN THE ACTUAL FOUNDATION GIVEN THE DIFFICULTY WHICH WOULD BE ENCOUNTERED IN EMBEDDING AN 8 FOOT LONG SECTION OF GROUND ROD IN THE SOIL.
2. THE GROUND ROD SHALL BE DRIVEN IN THE CLOSEST PULL BOX OR MANHOLE AS DIRECTED BY THE ENGINEER IN THE FIELD.
3. THE GROUND ROD SHALL BE ¾" DIAMETER COPPER CLAD, 10'-0" IN LENGTH.
4. A 2" LONG SEGMENT OF THE GROUND ROD SHALL EXTEND ABOVE THE BOTTOM OF THE PULLBOX/MANHOLE.
5. A SEGMENT OF NO. 6 SOLID GROUND CABLE SHALL BE AFFIXED TO THE 2" SEGMENT OF GROUND ROD EXTENDING ABOVE THE BOTTOM OF THE PULLBOX/MANHOLE AND BE INSTALLED THROUGH THE PVC CONDUIT TO THE MAST ARM POLE FOUNDATION AND INTO THE MAST ARM POLE, WHERE THE GROUND CABLE IS TO BE CONNECTED.

NOTE:

THE PCC CONCRETE FOR THE FOUNDATIONS SHALL BE RATED AT 3500 PSI AND CONFORM WITH THE PROVISIONS OF D.C. SPECIFICATION 803.01. FOUNDATION DESIGNS SPECIFIED BY POLE MANUFACTURERS SUPERSEDE THESE DESIGNS.

DATE	APPR.	REFERENCE
REVISED		
ISSUED:		

RECOMMENDED: DEPUTY CHIEF ENGINEER

APPROVED: CHIEF TRANSPORTATION ENGINEER

TRAFFIC SIGNAL POLE MAST ARM POLE FOUNDATION AND CABLE ENTRANCE

d. DISTRICT OF COLUMBIA
DEPARTMENT OF TRANSPORTATION

DWG. NO. 617.02

p:\4035\dc standard drawings\final\UNCHANGED\617-02.DGN
Friday, April 03, 2009 AT 12:20 PM

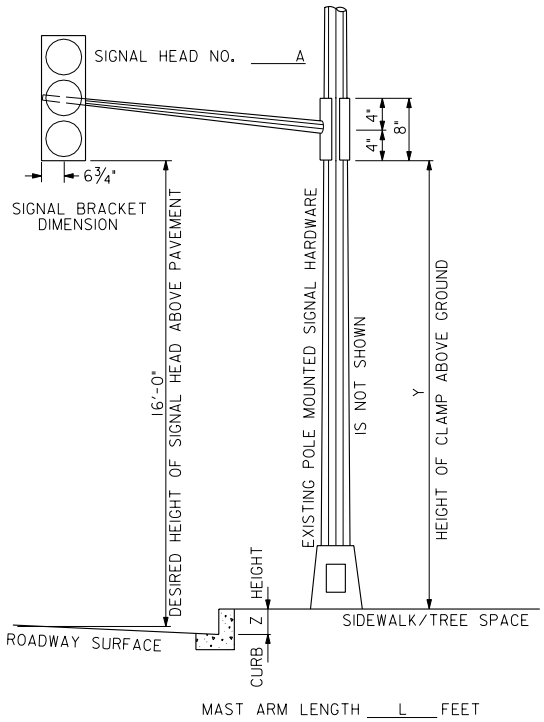

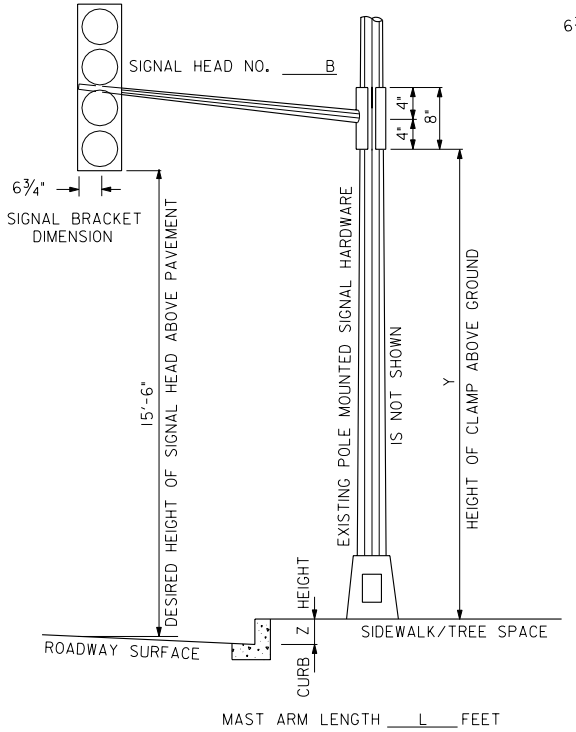

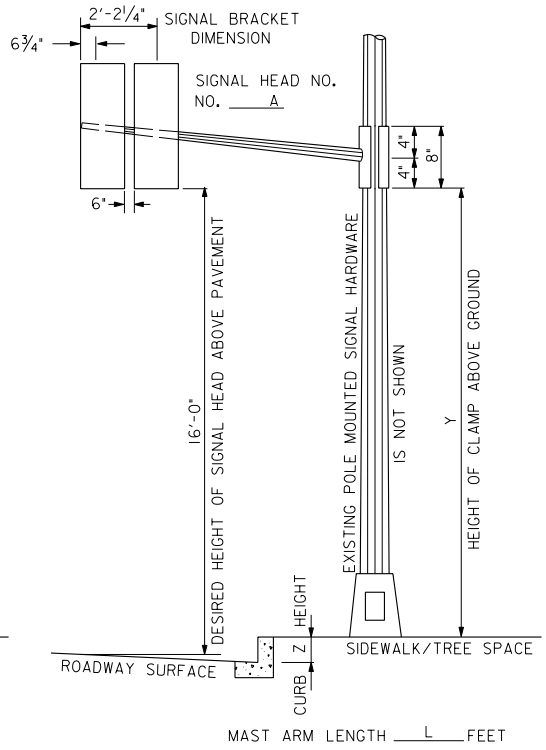

NOTES:

1. MAST ARM LENGTHS ARE 6', 8', 10' AND 12'.
2. HEIGHT OF CLAMP ABOVE GROUND (Y) IS CALCULATED AS FOLLOWS:
   - A: FOR SIGNAL HEIGHT 16'-0" ABOVE ROAD — $Y = 17'\text{-}3\tfrac{1}{2}" - (Z + 1.67L)"$
   - B: FOR SIGNAL HEIGHT 15'-6" ABOVE ROAD — $Y = 17'\text{-}4" - (Z + 1.67L)"$
   - C: FOR SIGNAL HEIGHT 15'-0" ABOVE ROAD — $Y = 17'\text{-}4\tfrac{1}{2}" - (Z + 1.67L)"$

   WHERE Z = CURB HEIGHT MEASURED IN INCHES
   L = MAST ARM LENGTH MEASURED IN FEET
3. APPROVED STAINLESS STEEL SIGNAL BRACKETS SHALL BE USED TO AFFIX VEHICLE SIGNAL HEAD TO MAST ARM.

DATE	APPR.	
REVISED		
ISSUED:		
		REFERENCE

RECOMMENDED: DEPUTY CHIEF ENGINEER

APPROVED: CHIEF TRANSPORTATION ENGINEER

TRAFFIC SIGNAL POLE SHORT MAST ARM HARDWARE MOUNTING DETAILS

d. DISTRICT OF COLUMBIA
DEPARTMENT OF TRANSPORTATION

DWG. NO. 617.03

p:\4035\dc standard drawings\final\UNCHANGED\617-03.DGN
Friday, April 03, 2009 AT 12:20 PM

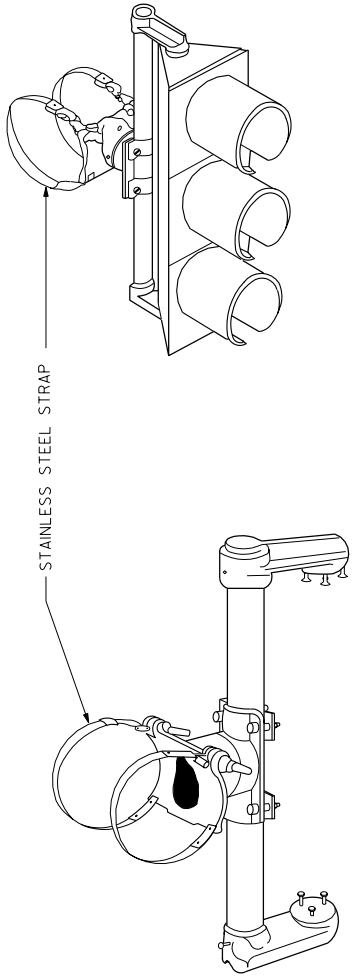

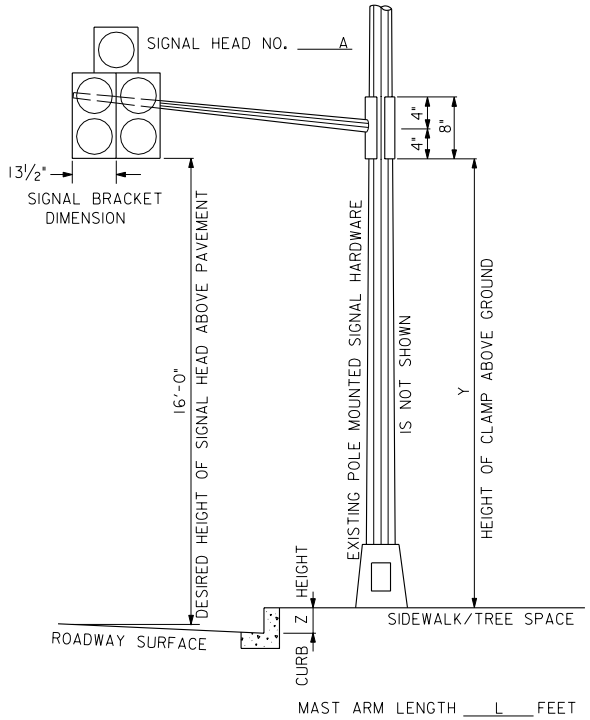

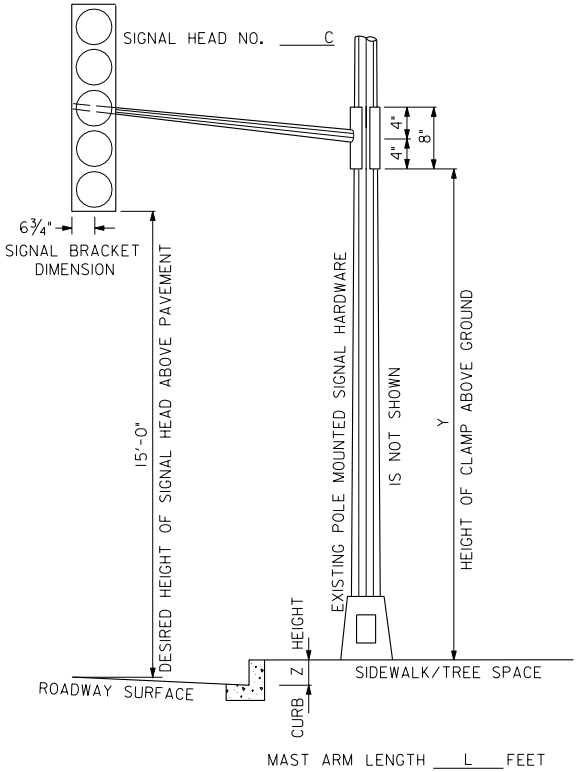

RIGID MAST ARM MOUNTING DETAILS

NOTE:
FOR MAST ARM NOTES, SEE DWG. 617.03.

DATE	APPR.	
REVISED		
ISSUED:		
		REFERENCE

RECOMMENDED: DEPUTY CHIEF ENGINEER

APPROVED: CHIEF TRANSPORTATION ENGINEER

TRAFFIC SIGNAL POLE SHORT MAST ARM HARDWARE MOUNTING DETAILS

d. DISTRICT OF COLUMBIA
DEPARTMENT OF TRANSPORTATION

DWG. NO. 617.04

p:\4035\dc standard drawings\final\UNCHANGED\617-04.DGN
Friday, April 03, 2009 AT 12:20 PM

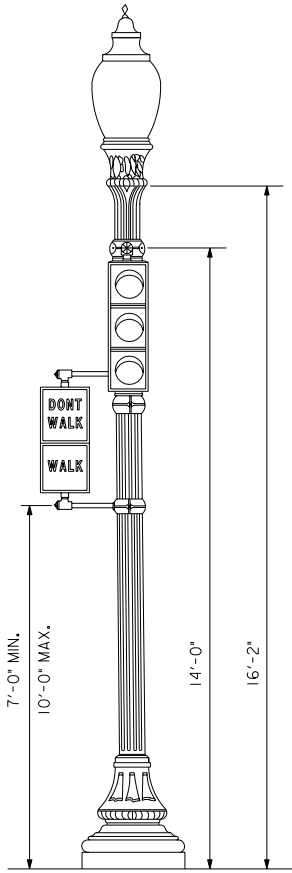

NO.18 DECORATIVE STREET LIGHT POLE

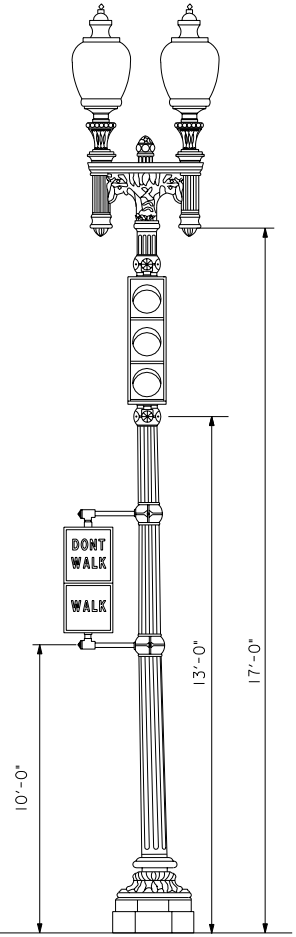

TWIN 20 DECORATIVE STREET LIGHT POLE

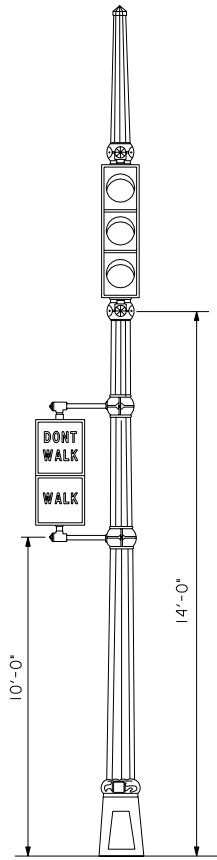

18 FOOT TALL STEEL TRAFFIC SIGNAL POLE

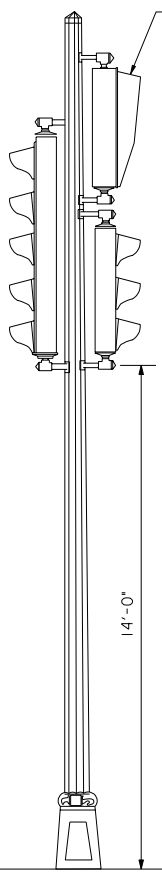

25 FOOT TALL STEEL TRAFFIC SIGNAL POLE

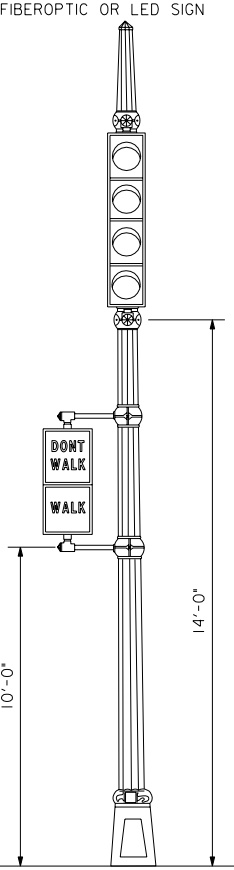

20 FOOT TALL STEEL TRAFFIC SIGNAL POLE

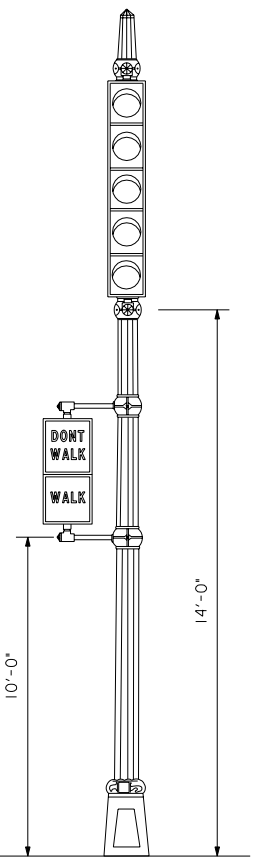

25 FOOT TALL STEEL TRAFFIC SIGNAL POLE

NOTES:

1. 25 FOOT TALL STEEL TRAFFIC SIGNAL POLE IS SIMILAR TO A TYPICAL DC PENDANT POST STREET LIGHT POLE.
2. ALL STEEL TRAFFIC SIGNAL POLES SHALL BE MOUNTED ON A TRANSFORMER EXCEPT WHEN A TEMPORARY PORTABLE CONCRETE BASE IS SPECIFIED IN THE PROJECT PLANS. SEE DWG. NO. 617.08 FOR TRANSFORMER BASE DETAILS. SEE DWG. NO. 617.24 FOR TEMPORARY CONCRETE BASE DETAILS.
3. DECORATIVE STREET LIGHT POLES MAY EXIST IN THE FIELD WITH OR WITHOUT LUMINAIRE.
4. NO. 16 DECORATIVE TRAFFIC SIGNAL POLE IS NOT SHOWN ON THIS DETAIL, MOUNTING TRAFFIC SIGNALS ON THIS POLE IS LIMITED TO SPECIAL APPLICATIONS.
5. UNLESS OTHERWISE SPECIFIED, STAINLESS STEEL STRAPPING SHALL BE USED TO AFFIX HARDWARE TO POLES.

DATE	APPR.	REFERENCE
REVISED		
ISSUED:		

RECOMMENDED: DEPUTY CHIEF ENGINEER

APPROVED: CHIEF TRANSPORTATION ENGINEER

TRAFFIC SIGNAL HARDWARE ARRANGEMENT ON METAL POLES

d. DISTRICT OF COLUMBIA
DEPARTMENT OF TRANSPORTATION

DWG. NO. **617.05**

p:\4035\dc standard drawings\final\UNCHANGED\617-05.DGN
Friday, April 03, 2009 AT 12:20 PM

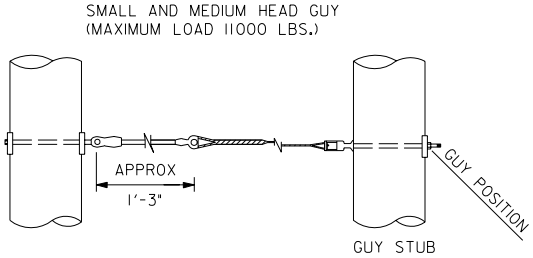

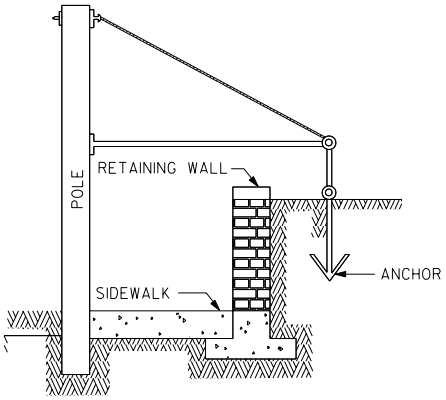

SIDEWALK GUY

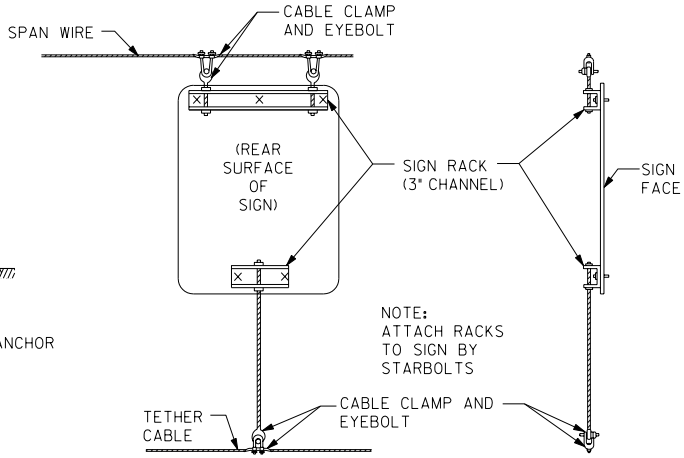

SPAN-WIRE MOUNTED SIGN

1. INSULATED GUYS CONNECTED TO A LINE CONDUCTOR POLE REQUIRE AN INSULATOR AT THAT POLE.

2. SIDEWALK GUYS SHALL EITHER BE INSULATED OR GROUNDED.

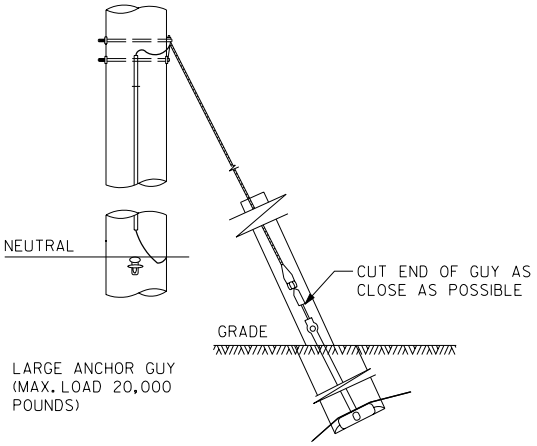

NON-INSULATED (GROUNDED)
ANCHOR GUYS

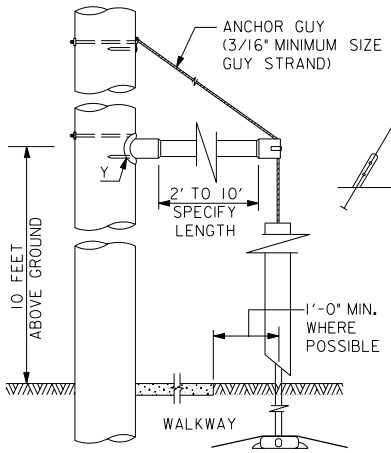

SIDEWALK ANCHOR GUY BRACE

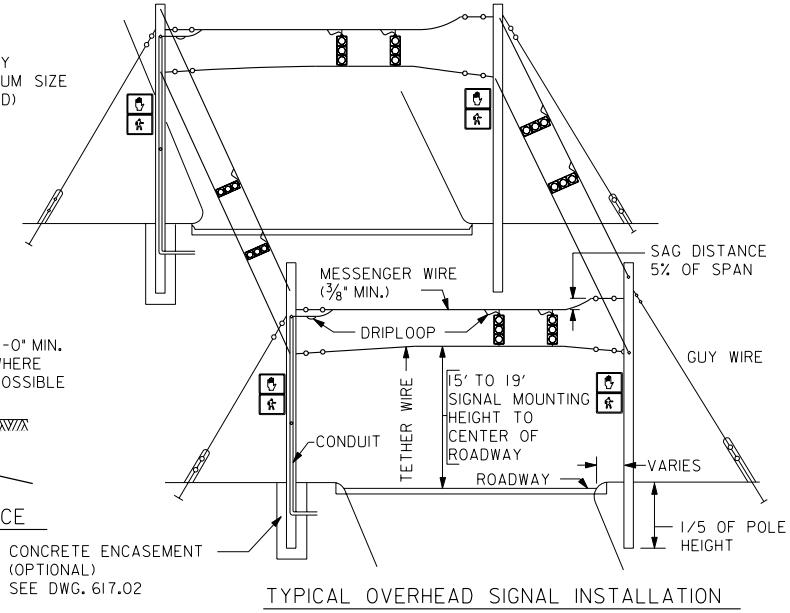

TYPICAL OVERHEAD SIGNAL INSTALLATION

DATE	APPR.	REFERENCE
REVISED		
ISSUED:		

RECOMMENDED: DEPUTY CHIEF ENGINEER

APPROVED: CHIEF TRANSPORTATION ENGINEER

TRAFFIC SIGNAL SPAN WIRE WOOD POLE INSTALLATION

d. DISTRICT OF COLUMBIA
DEPARTMENT OF TRANSPORTATION

DWG. NO. 617.06

p:\4035\dc standard drawings\final\UNCHANGED\617-06.DGN
Friday, April 03, 2009 AT 12:20 PM

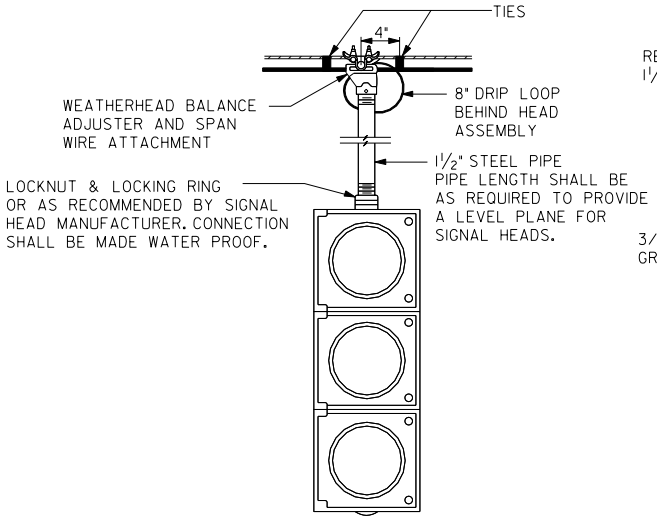

SIGNAL HEAD MOUNTING DETAILS FOR SPAN WIRE

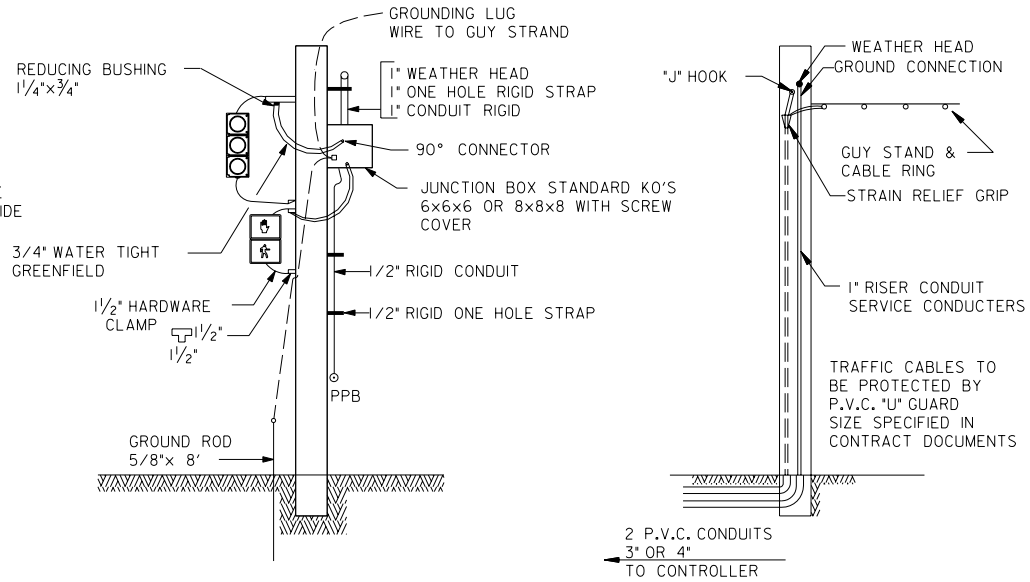

TYPICAL WOOD POLE INSTALLATION

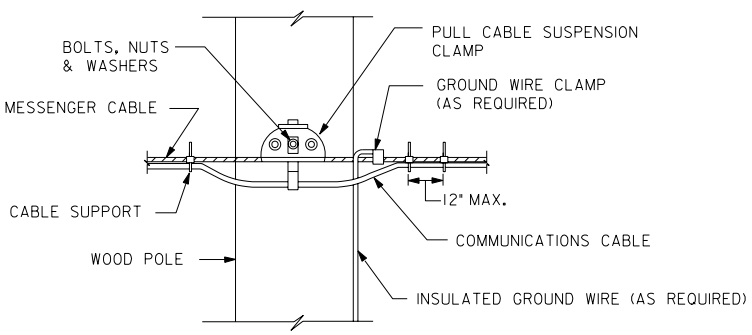

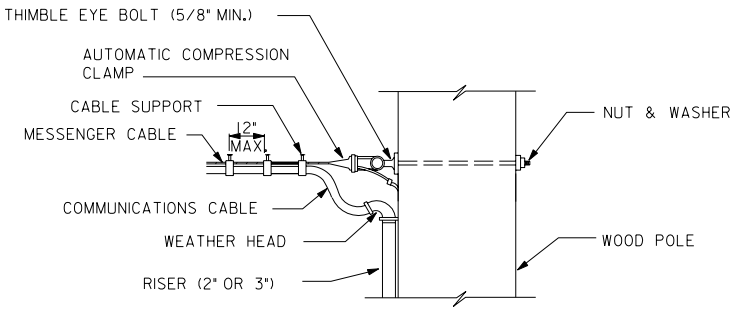

TYPICAL COMMUNICATIONS CABLE INSTALLATION ON WOOD POLE

DATE	APPR.	REFERENCE
REVISED		
ISSUED:		

RECOMMENDED: DEPUTY CHIEF ENGINEER

APPROVED: CHIEF TRANSPORTATION ENGINEER

TRAFFIC SIGNAL SPAN WIRE WOOD POLE INSTALLATION

d. DISTRICT OF COLUMBIA
DEPARTMENT OF TRANSPORTATION

DWG. NO. **617.07**

p:\4035\dc standard drawings\final\UNCHANGED\617-07.DGN
Friday, April 03, 2009 AT 12:20 PM

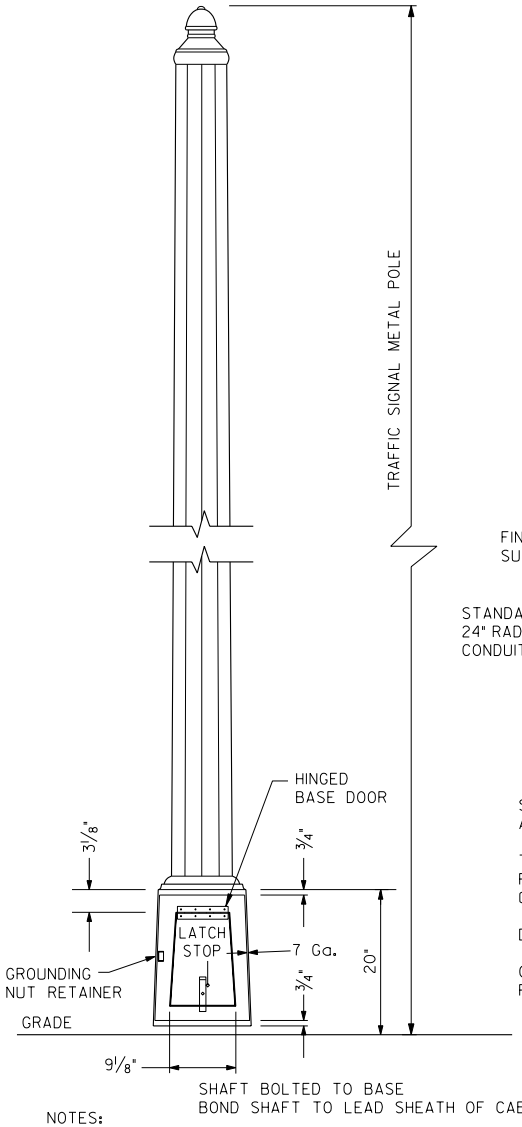

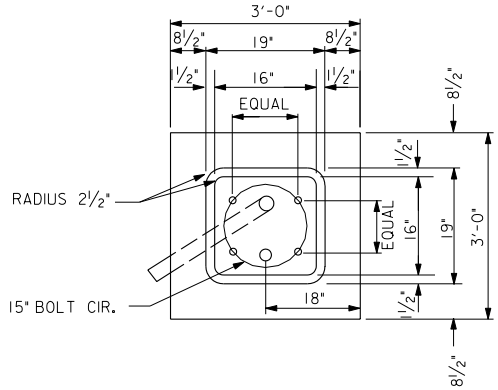

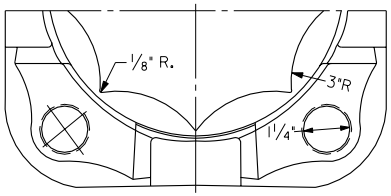

HALF PLAN

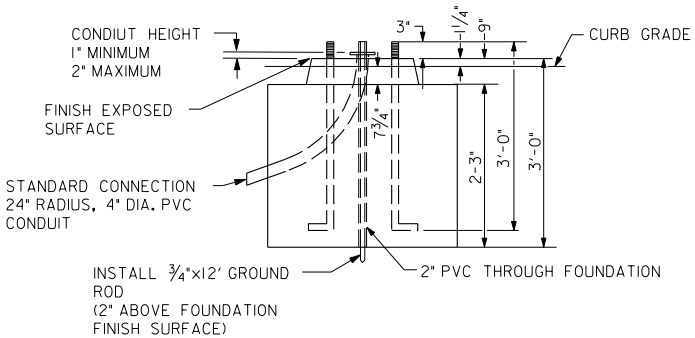

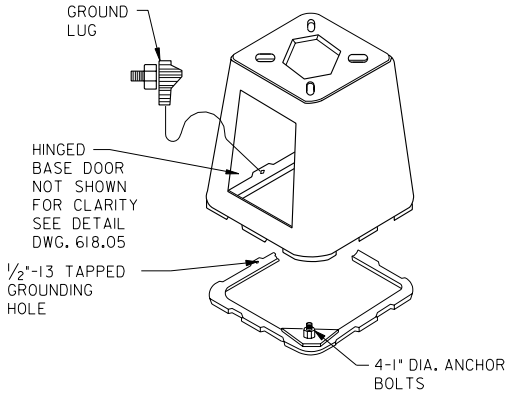

SEE CONST. DWG. TO CHECK BOLT CENTERS AND RELATED INFORMATON ON THIS DRAWING.

THE DISTANCE OF CENTER OF FOUNDATION TO FACE OF CURB TO BE 3'-6" EXCEPT AS NOTED ON CONST. DWG.

DOOR OF TRANSFORMER BASE TO BE 90° FROM CURB.

QUARTER BEND TO BE ON CURB OR SIDEWALK SIDE 4" FROM ℄ OF FOUNDATION USE TEMPLATE NO. U.M.T. 1.

CONCRETE FOUNDATION

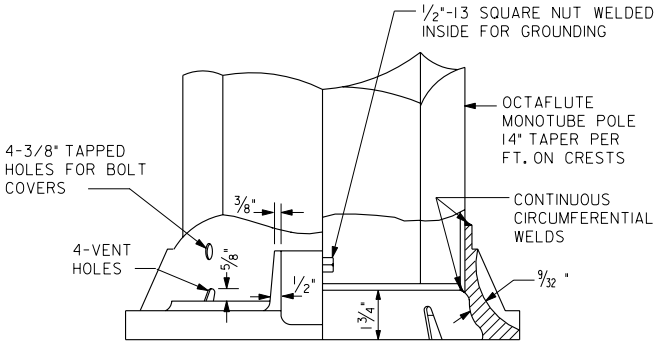

NOTE:

TRANSFORMER BASE DOOR MUST FACE SIDEWALK OR TREE SPACE

STEEL TRANSFORMER BASE

NOTES:

1. CONTRACTOR SHALL INSTALL DUCT SEAL IN CONDUIT AFTER CABLE HAS BEEN PULLED.
2. GROUND ROD IS POSITIONED IN 2" DIAMETER PVC CONDUIT EXTENDING THROUGH THE FOUNDATION.
3. 3/4" DIAMETER COPPER CLAD GROUND ROD SHALL BE 12'-0" LONG TO ENSURE THAT AT LEAST 8 FEET OF THE ROD IS EMBEDDED IN SOIL. THE NO. 6 SOLID GROUND CABLE SHALL BE AFFIXED TO THAT PORTION OF THE GROUND ROD EXTENDING ABOVE THE FOUNDATION SURFACE.

DATE	APPR.	REFERENCE
REVISED		
ISSUED:		

RECOMMENDED: DEPUTY CHIEF ENGINEER

APPROVED: CHIEF TRANSPORTATION ENGINEER

TRAFFIC SIGNAL METAL POLE FOUNDATION AND TRANSFORMER BASE

d. DISTRICT OF COLUMBIA
DEPARTMENT OF TRANSPORTATION

DWG. NO. 617.08

p:\4035\dc standard drawings\final\UNCHANGED\617-08.DGN
Friday, April 03, 2009 AT 12:20 PM

NOTE:

1. PUSH BUTTON AND SIGN TO FACE IN SAME DIRECTION AS THE PEDESTRIAN SIGNAL ALL ON SAME POLE.

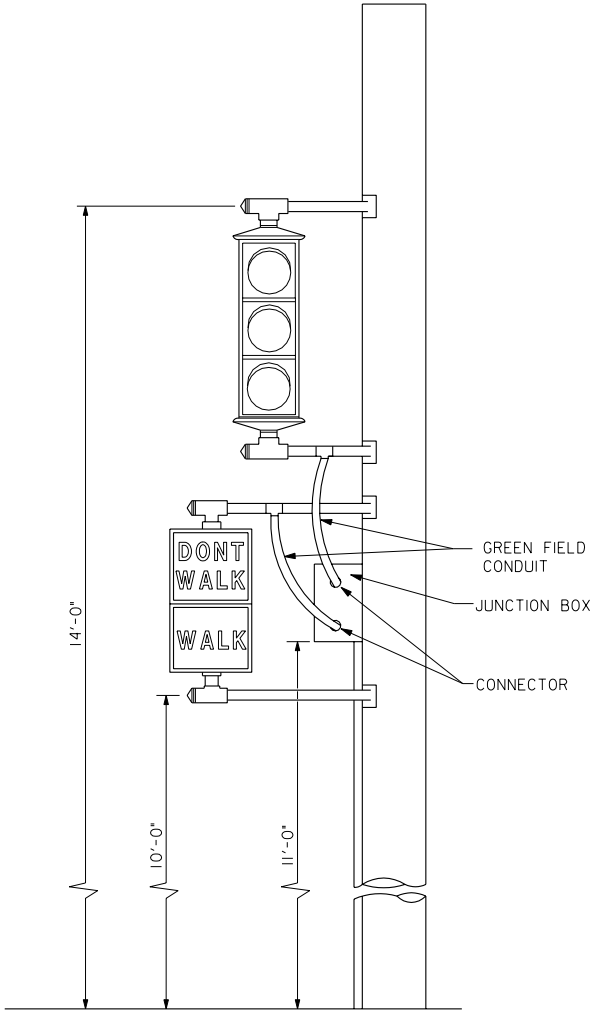

TYPICAL WOOD POLE SIGNAL INSTALLATION

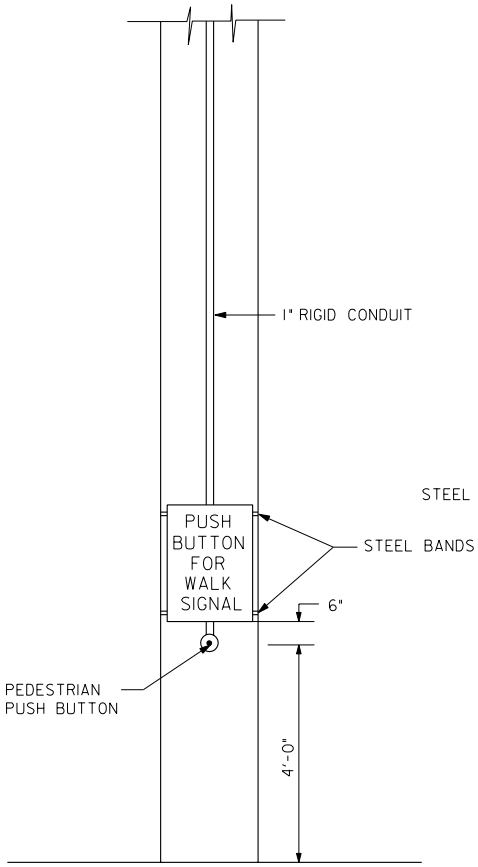

TYPICAL PEDESTRIAN PUSH BUTTON INSTALLATION ON WOOD POLE

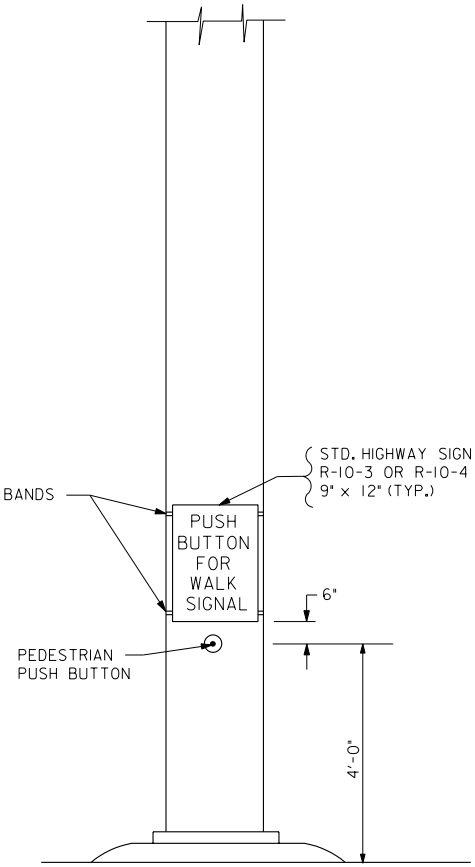

TYPICAL PEDESTRIAN PUSH BUTTON INSTALLATION ON METAL POLE

DATE	APPR.	
REVISED		
ISSUED:		
		REFERENCE

RECOMMENDED: DEPUTY CHIEF ENGINEER

APPROVED: CHIEF TRANSPORTATION ENGINEER

TRAFFIC SIGNAL HARDWARE WOOD POLES AND PEDESTRIAN PUSH BUTTON INSTALLATION

d. DISTRICT OF COLUMBIA
DEPARTMENT OF TRANSPORTATION

DWG. NO. 617.09

p:\4035\dc standard drawings\final\UNCHANGED\617-09.DGN
Friday, April 03, 2009 AT 12:20 PM

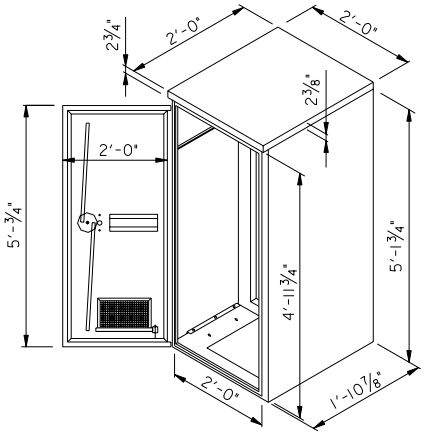

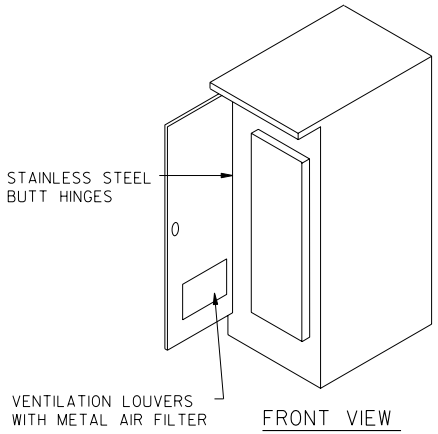

FRONT VIEW

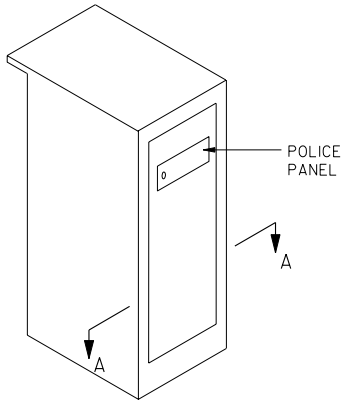

REAR VIEW

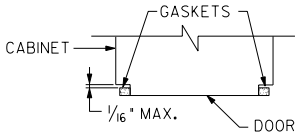

SECTION A-A

MODEL 336SS CONTROLLER CABINET

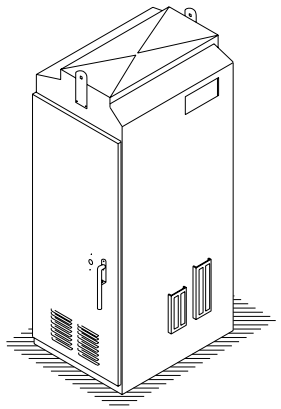

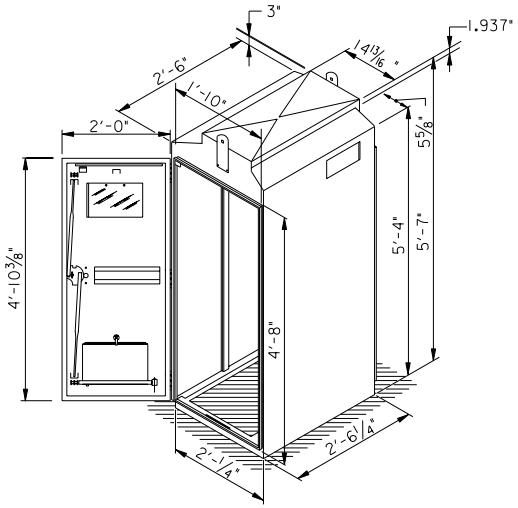

MODEL 332 CONTROLLER CABINET DETAILS

			RECOMMENDED: DEPUTY CHIEF ENGINEER
DATE	APPR.		APPROVED: CHIEF TRANSPORTATION ENGINEER
REVISED			
ISSUED:		REFERENCE	

TRAFFIC SIGNAL CONTROLLER CABINET DETAILS

d. DISTRICT OF COLUMBIA
DEPARTMENT OF TRANSPORTATION

DWG. NO. **617.10**

p:\4035\dc standard drawings\final\UNCHANGED\617-10.DGN
Friday, April 03, 2009 AT 12:20 PM

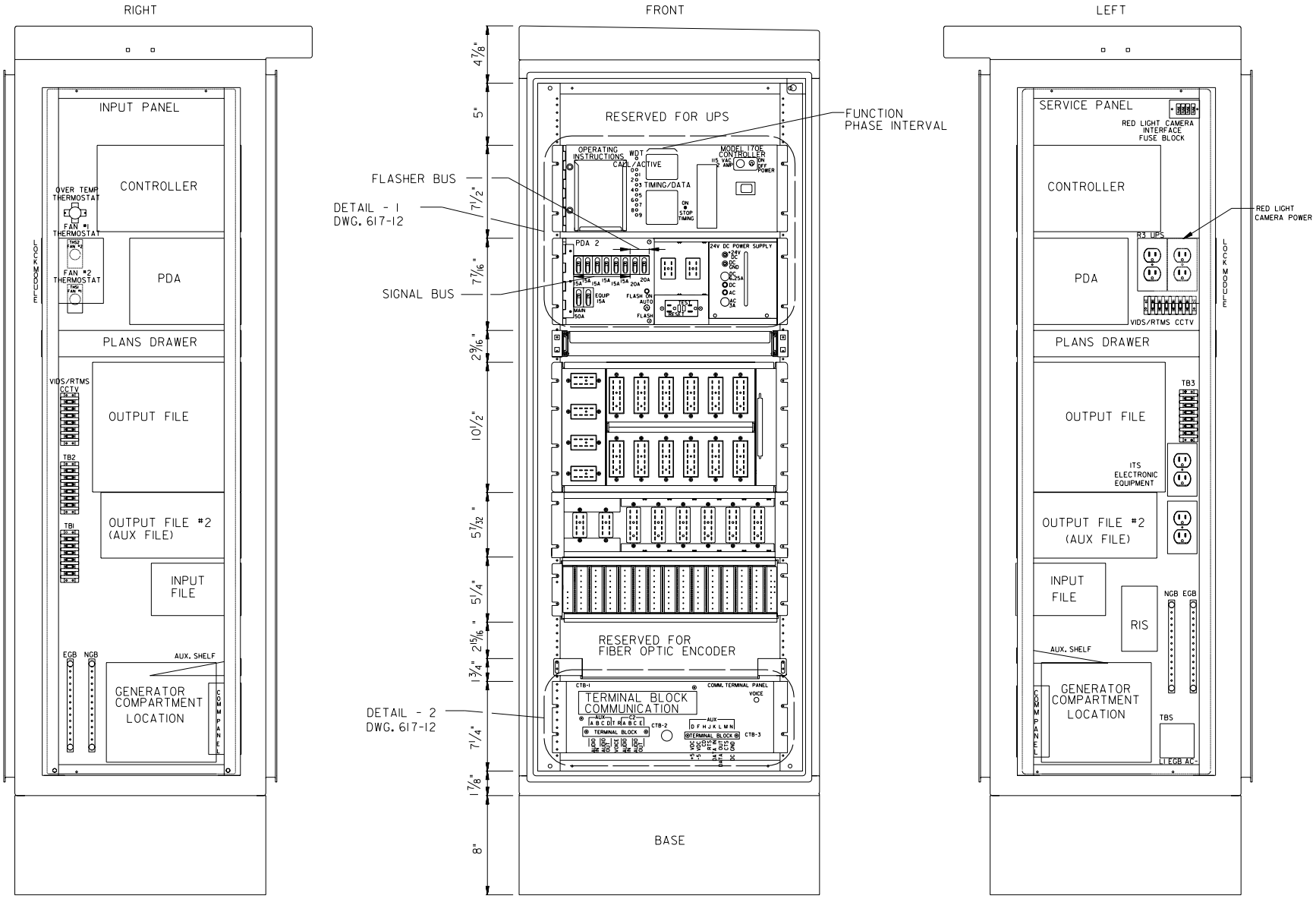

DATE	APPR.	
REVISED		
ISSUED:		
		REFERENCE

RECOMMENDED: _____
DEPUTY CHIEF ENGINEER

APPROVED: _____
CHIEF TRANSPORTATION ENGINEER

336SS TRAFFIC SIGNAL CABINET FRONT, LEFT, AND RIGHT VIEWS

DISTRICT OF COLUMBIA
DEPARTMENT OF TRANSPORTATION

DWG. NO. **617.11**

p:\4035\dc standard drawings\final\UNCHANGED\617-11.DGN
Friday, April 03, 2009 AT 12:20 PM

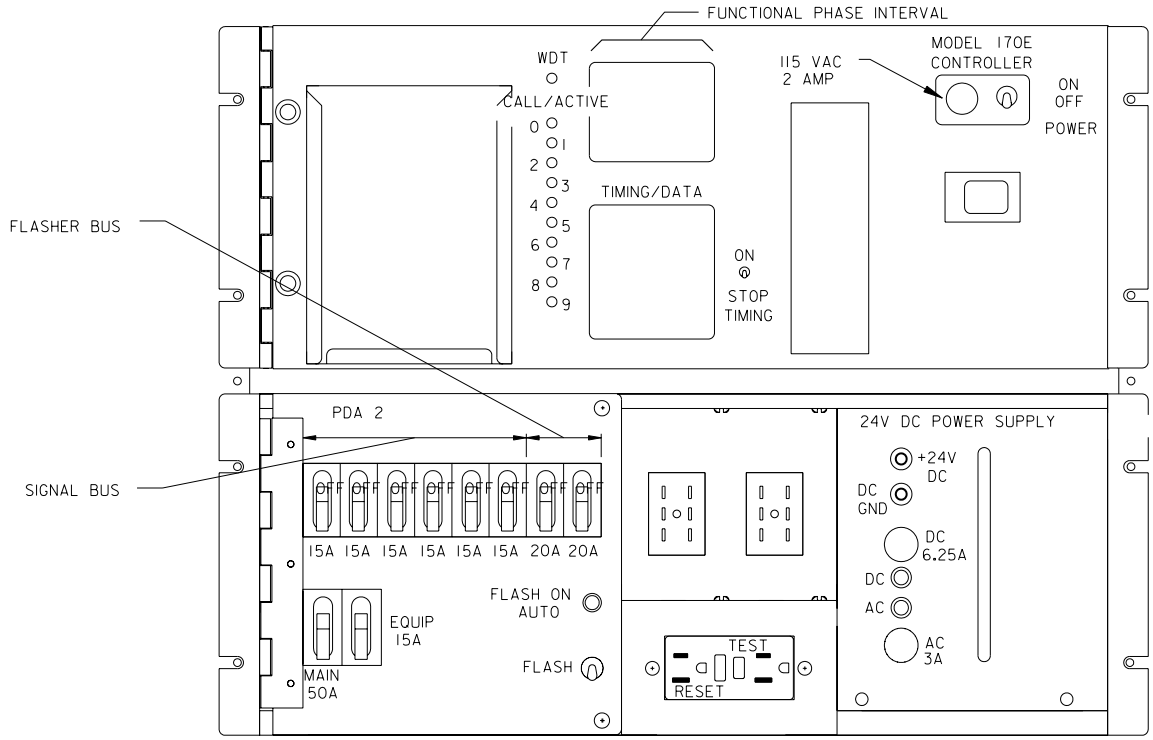

DETAIL - 1

DWG. 617.11

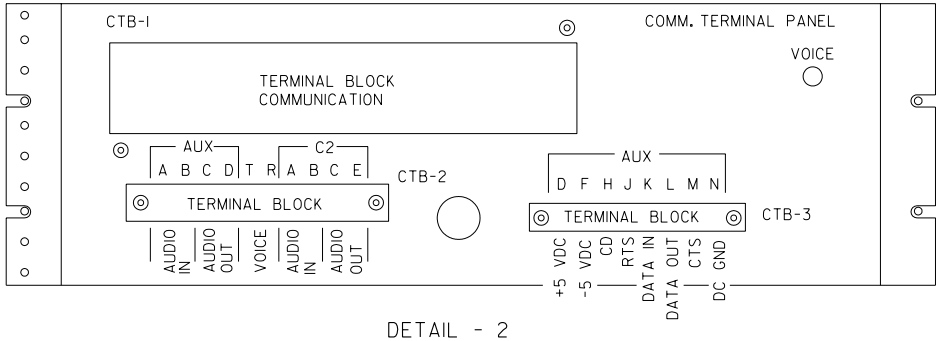

DETAIL - 2

DWG. 617.11

			RECOMMENDED: DEPUTY CHIEF ENGINEER
DATE	APPR.		APPROVED: CHIEF TRANSPORTATION ENGINEER
REVISED			
ISSUED:		REFERENCE	

336SS TRAFFIC SIGNAL CABINET DETAILS

DISTRICT OF COLUMBIA
DEPARTMENT OF TRANSPORTATION

DWG. NO. **617.12**

p:\4035\dc standard drawings\final\UNCHANGED\617-12.DGN
Friday, April 03, 2009 AT 12:20 PM

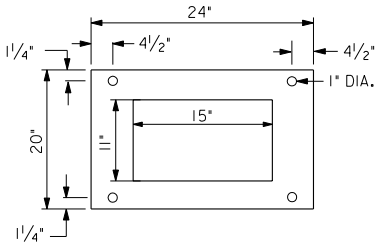

TOP VIEW

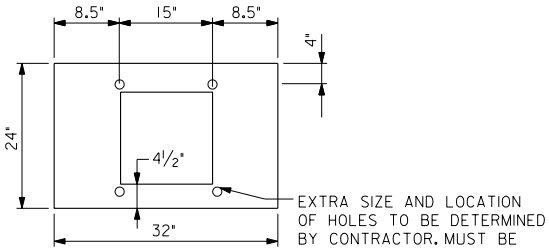

TOP VIEW

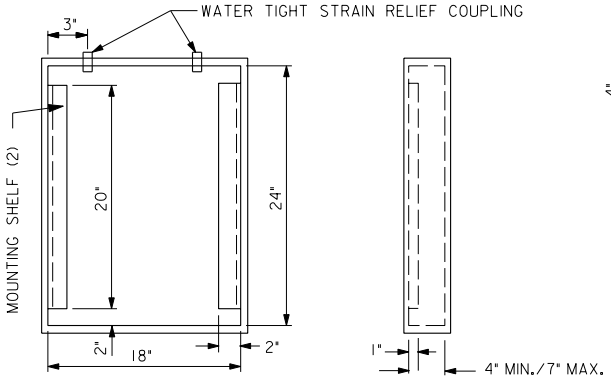

FRONT VIEW

SIDE VIEW

AERIAL TERMINATION CABINET

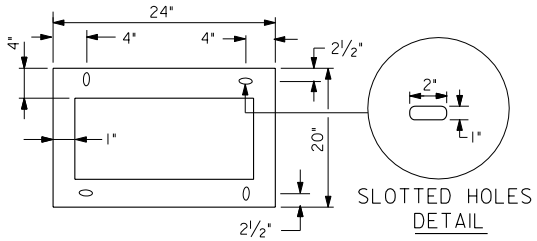

BOTTOM VIEW

SLOTTED HOLES DETAIL

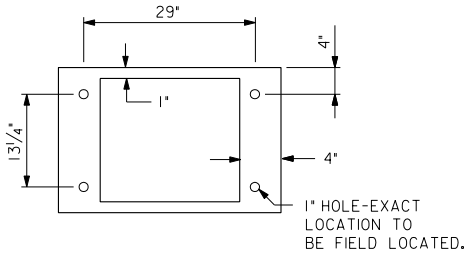

BOTTOM VIEW

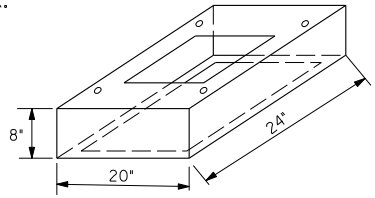

ADAPTOR BASE NO. 1

USE WITH STANDARD 336SS FOUNDATIONS

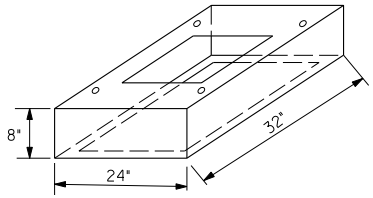

ADAPTOR BASE NO. 2

USE WITH FOUNDATIONS FOR 332 AND 336SS CABINETS ON EXISTING TYPE N FOUNDATIONS

CONTROLLER AND TERMINATION CABINET ADAPTOR BASES

NOTES:

1. CABINET TYPE 3R ELECTRICAL ENCLOSURE.
2. THE SIZE OF THE WATER TIGHT STRAIN RELIEF COUPLINGS WILL BE SPECIFIED BY THE ENGINEER.
3. THE DOOR SHALL BE HINGED, AND LATCHED.
4. REAR OF THE CABINET SHALL HAVE TWO (2) WOOD POLE MOUNTING BRACKETS TO BE USED WITH METAL STRAPPING.
5. THE CABINET SHALL BE MADE OF ALUMINUM SHEET WITH A MIN. OF 0.125" THICKNESS.

NOTES:

1. WHEN ADAPTOR BASE NO. 2 IS USED FOR A TYPE 332 CABINET, NEW HOLES MUST BE DRILLED IN THE TOP PLATE. THE HOLES SHALL BE 29" APART ON THE LONG SIDE AND 13¼" APART ON THE SHORT SIDE (29"x13¼").
2. TYPE N FOUNDATIONS WILL NOT BE CONSTRUCTED.

DATE	APPR.	REFERENCE
REVISED		
ISSUED:		

RECOMMENDED: DEPUTY CHIEF ENGINEER

APPROVED: CHIEF TRANSPORTATION ENGINEER

TRAFFIC SIGNAL AERIAL TERMINATION CABINETS AND CONTROLLER CABINET ADAPTER BASES

d. DISTRICT OF COLUMBIA
DEPARTMENT OF TRANSPORTATION

DWG. NO. **617.13**

p:\4035\dc standard drawings\final\UNCHANGED\617-13.DGN
Friday, April 03, 2009 AT 12:20 PM

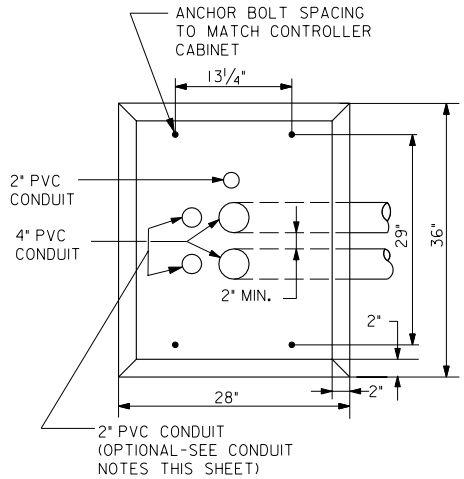

FOUNDATION NOTES:

1. POSITION SHORT SIDE OF FOUNDATION PARALLEL TO CURB WITH THE REAR EDGE OF THE FOUNDATION A MINIMUM OF 3 FEET FROM THE FACE OF THE CURB UNLESS SPECIFIED OTHERWISE.
2. POSITION LONG SIDE OF FOUNDATION BEYOND THE MARKED WALK-WAY, STOP LINE AND TRAFFIC SIGNAL POST.
3. IN UNUSUAL INSTANCES SUCH AS CIRCLES AND MULTI-LEG INTERSECTIONS, THE CURB SIDE AND THE FRONT DOOR LOCATION SHOULD BE SPECIFIED ON THE DRAWING.
4. CONSTRUCTION DRAWING TO SPECIFY THE DIRECTION OF THE BENDS. PROVIDE 36" MIN. COVER IN ALL INSTALLATIONS.
5. FRONT DOOR IS TO BE POSITIONED SO THAT A PERSON CAN VIEW THE INTERSECTION WHILE OBSERVING THE CONTROLLER DISPLAY.

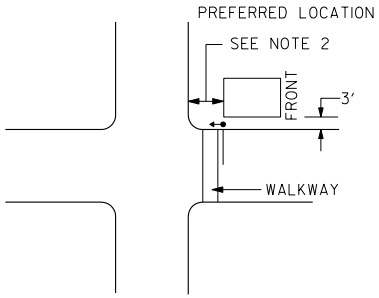

TYPICAL LAYOUT

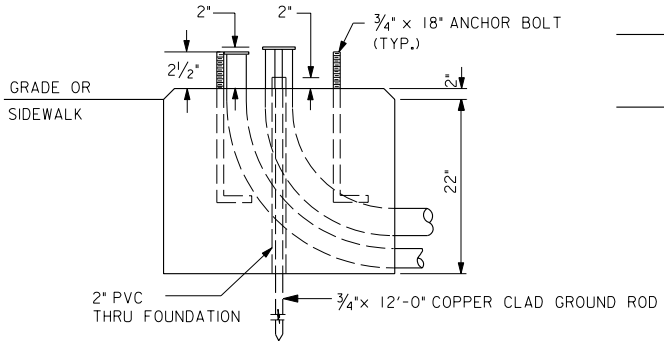

TYPE 332 FOUNDATION

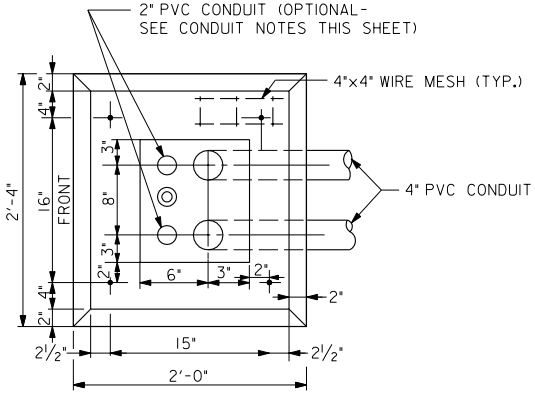

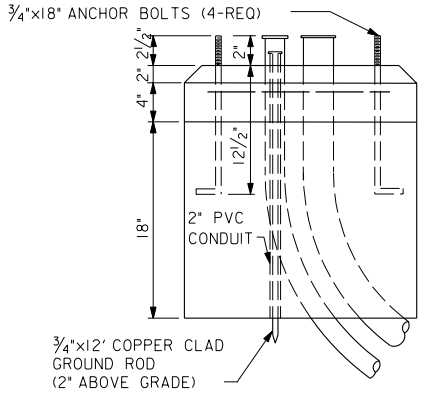

TYPE 336SS FOUNDATION

CONDUIT NOTES:

1. UNLESS OTHERWISE SPECIFIED, ONLY TWO 4" DIAMETER CONDUITS ARE TO BE BUILT INTO THE FOUNDATION.
2. SPECIFIC INTERSECTION PLANS WILL INDICATE WHETHER ONE OR TWO ADDITIONAL 2" DIAMETER CONDUITS ARE ALSO TO BE PROVIDED.
3. GROUND RODS ARE POSITIONED IN 2" DIAMETER PVC CONDUIT EXTENDING THROUGH THE FOUNDATION.
4. CONTRACTOR SHALL INSTALL DUCT SEAL IN CONDUITS AFTER CABLE HAS BEEN PULLED.
5. ¾" DIAMETER COPPER CLAD GROUND ROD SHALL BE 12'-0" LONG TO ENSURE THAT AT LEAST 8 FEET OF THE ROD IS EMBEDDED IN SOIL. THE NO. 6 SOLID GROUND CABLE SHALL BE AFFIXED TO THAT PORTION OF THE GROUND ROD EXTENDING ABOVE THE FOUNDATION SURFACE.

DATE	APPR.	REFERENCE
REVISED		
ISSUED:		

RECOMMENDED: DEPUTY CHIEF ENGINEER

APPROVED: CHIEF TRANSPORTATION ENGINEER

TRAFFIC SIGNAL CONTROLLER FOUNDATION LOCATION AND DETAILS

DISTRICT OF COLUMBIA
DEPARTMENT OF TRANSPORTATION

DWG. NO. 617.14

p:\4035\dc standard drawings\final\UNCHANGED\617-14.DGN
Friday, April 03, 2009 AT 12:20 PM

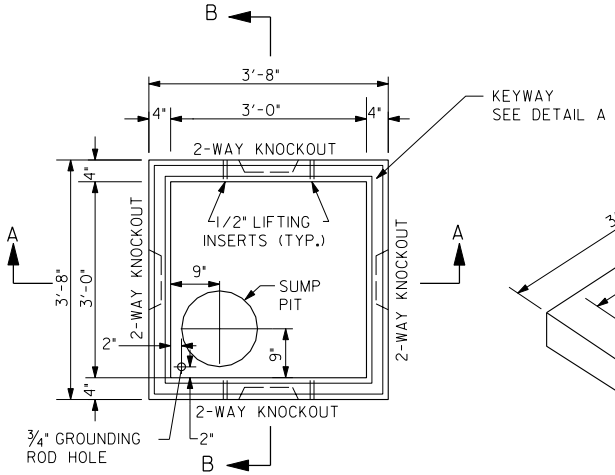

PLAN

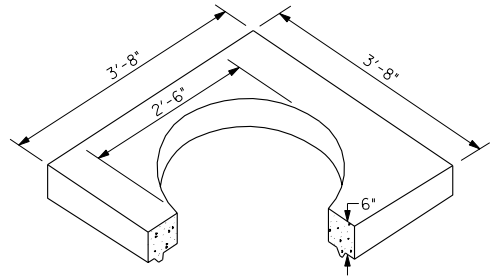

TOP

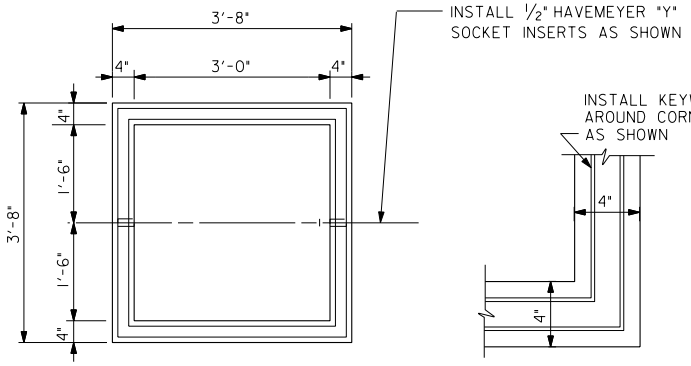

PLAN OF MANHOLE RING

(SEE DETAIL "C" FOR SECTIONS)

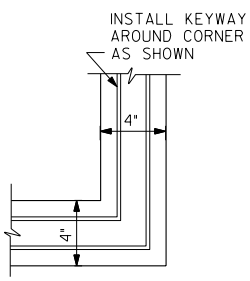

PLAN OF RING CORNER

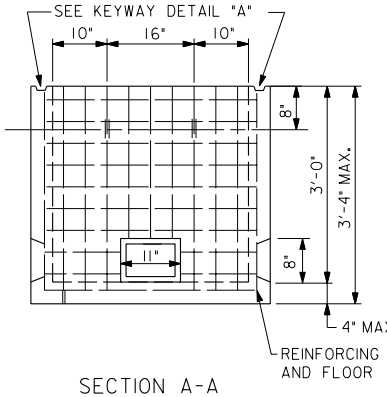

SECTION A-A

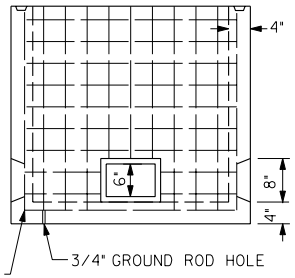

SECTION B-B

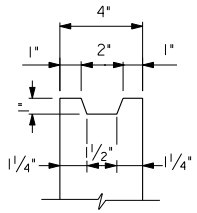

DETAIL "A"

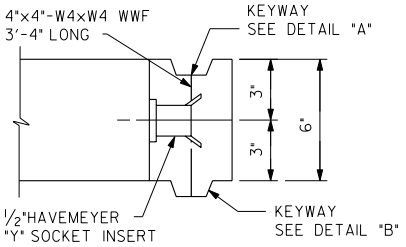

DETAIL "C"

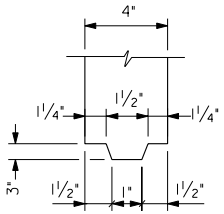

DETAIL "B"

NOTES:

1. MANHOLE CONCRETE SHALL BE CLASS B, 4500 PSI.
2. MANHOLE SECTIONS SHALL BE PRECAST.
3. HANDHOLE WILL BE DESIGNED FOR MINIMUM H20 LOADING. SUPPLIER IS TO PROVIDE CERTIFIED DESIGN CALCULATIONS FOR RECORD OR FOR APPROVAL.
4. REINFORCING IN WALLS AND FLOOR TO BE 4"x4"-W4xW4 WWF.
5. REINFORCING IN TOP SHALL BE PER MANUFACTURER'S SPECIFICATIONS.
6. MANHOLE RINGS ARE 6 IN. DEEP.

DATE	APPR.	REFERENCE
REVISED		
ISSUED:		

RECOMMENDED: DEPUTY CHIEF ENGINEER

APPROVED: CHIEF TRANSPORTATION ENGINEER

TRAFFIC SIGNAL DISTRICT
3' x 3' x 3' ELECTRICAL MANHOLE

DISTRICT OF COLUMBIA
DEPARTMENT OF TRANSPORTATION

DWG. NO. 617.15

p:\4035\dc standard drawings\final\UNCHANGED\617-15.DGN
Friday, April 03, 2009 AT 12:20 PM

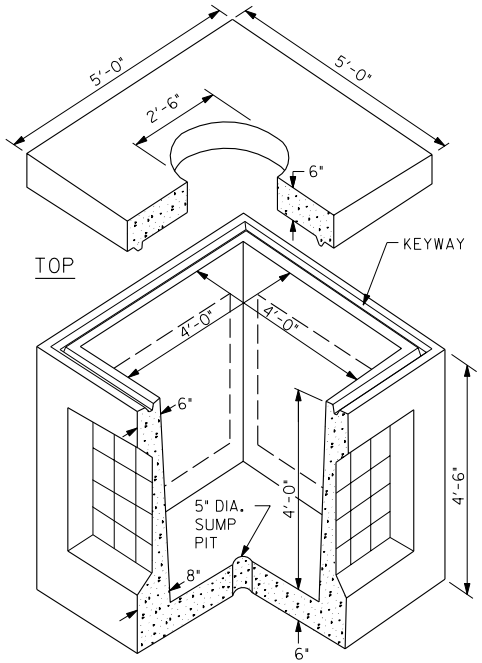

DIMENSIONS:
INSIDE - 4'-0" x 4'-0" x 4'-0"
OUTSIDE - 5'-0" x 5'-0" x 4'-6"

KNOCKOUTS:
ALL WALLS - 3'-6" x 2'-10",
1 PER WALL

KNOCKOUT PANEL:
2½" SOLID CONCRETE WITH
6x6 - 6/6 WWF AT CENTER,
LAP 6" INTO SLABS

FRAME & COVER: SEE DWG. NO. 617.17

GROUNDING: SEE DWG. NO. 617.19

KEYWAY, PULLING IRON AND BOLTING INSERT DETAILS: SEE DWG. NO. 617.18

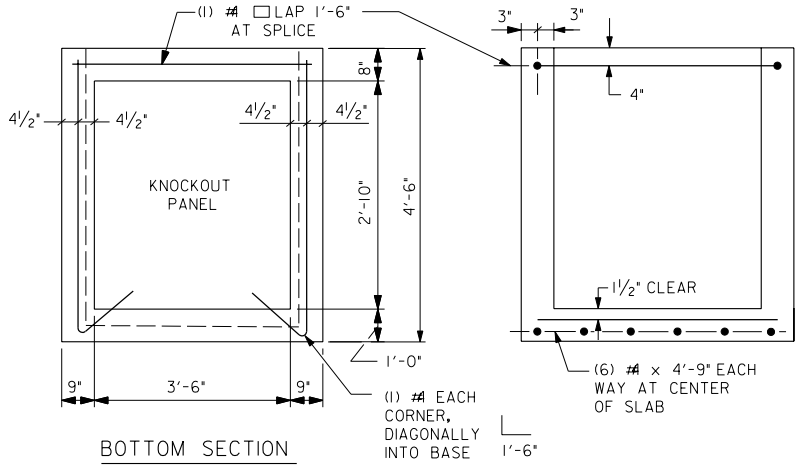

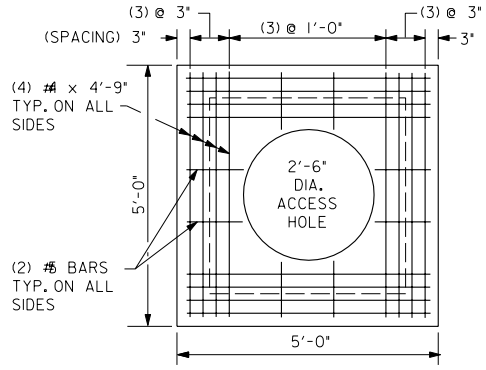

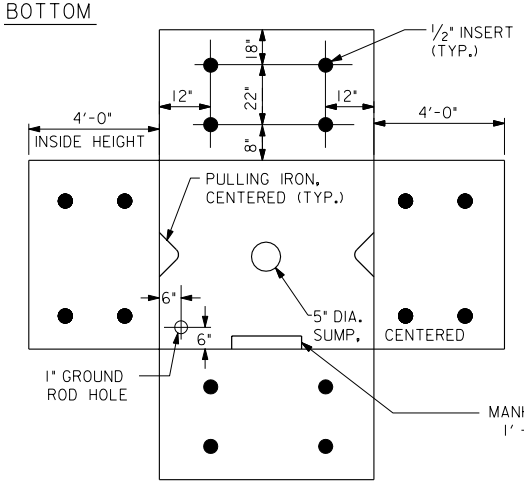

INSERT PLACEMENT SCHEDULE

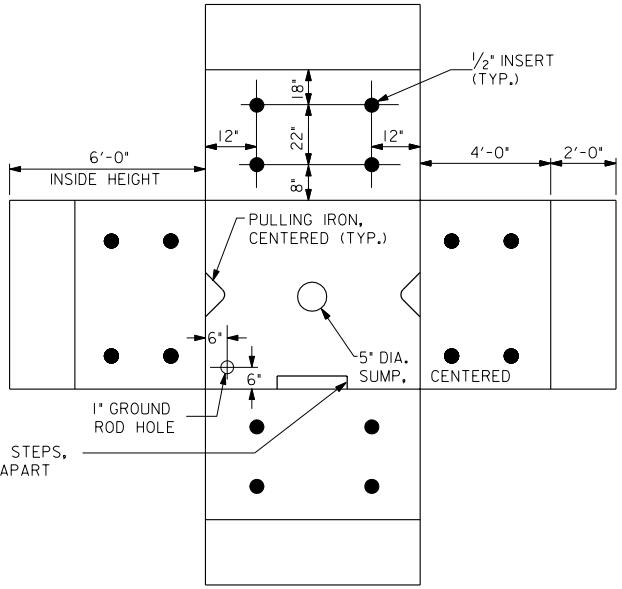

INSERT PLACEMENT SCHEDULE ALTERNATE
(BOTTOM SECTION ALTERNATE FOR 4' x 4' x 6' ELECTRICAL MANHOLE)

NOTES:

1. MANHOLE CONCRETE SHALL BE CLASS B, 4500 PSI.
2. MANHOLE SECTIONS SHALL BE PRECAST.

DATE	APPR.	REFERENCE
REVISED		
ISSUED:		

RECOMMENDED: DEPUTY CHIEF ENGINEER

APPROVED: CHIEF TRANSPORTATION ENGINEER

TRAFFIC SIGNAL DISTRICT
4' x 4' x 4' ELECTRICAL MANHOLE

d. DISTRICT OF COLUMBIA
DEPARTMENT OF TRANSPORTATION

DWG. NO. 617.16

p:\4035\dc standard drawings\final\UNCHANGED\617-16.DGN
Friday, April 03, 2009 AT 12:21 PM

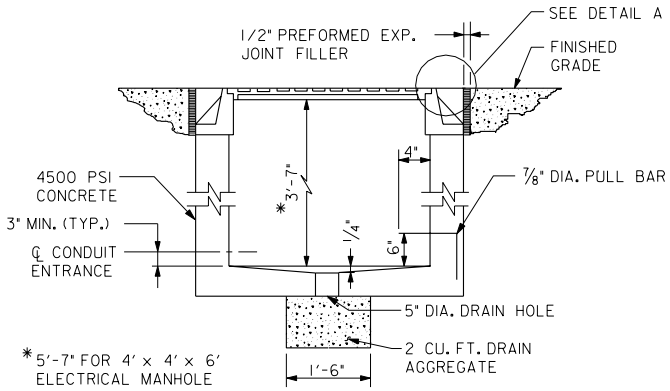

4' x 4' x 4' ELECTRICAL MANHOLE SECTION

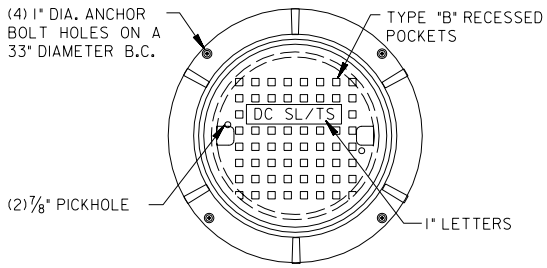

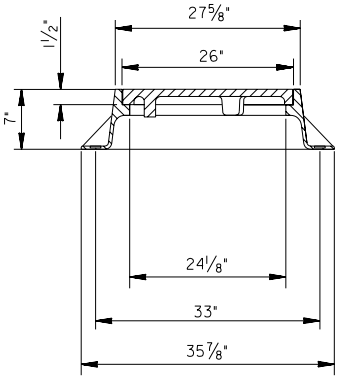

MANHOLE FRAME AND COVER

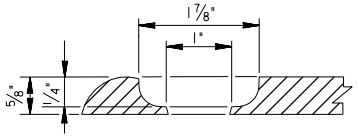

ANCHOR HOLE DETAIL

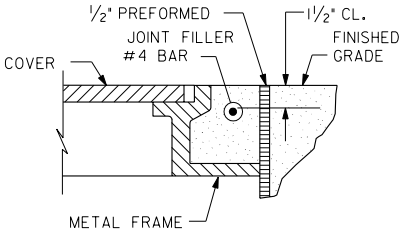

DETAIL A

MANHOLE FRAME AND COVER NOTES:

1. WHERE MANHOLE IS IN SIDEWALK, THE DEPTH OF THE FRAME SHALL BE 5 IN., AND THE COVER SHALL CONFORM TO THE SIDEWALK SLOPE. IT SHALL BE LEVEL AT ALL OTHER LOCATIONS.
2. CASTINGS ARE HEAVY DUTY AND MEET AASHTO M20 LOADING REQUIREMENTS.
3. MATERIAL: CAST GRAY IRON ASTM A-48, CLASS 35B, AASHTO M306.
4. FINISH: NOT PAINTED
5. THE MANUFACTURER'S NAME OR LOGO SHALL NOT BE CAST INTO THE RING OR COVER.

DATE	APPR.	REFERENCE
REVISED		
ISSUED:		

RECOMMENDED: DEPUTY CHIEF ENGINEER

APPROVED: CHIEF TRANSPORTATION ENGINEER

TRAFFIC SIGNAL DISTRICT
ELECTRICAL MANHOLE DETAILS - 1

d. DISTRICT OF COLUMBIA
DEPARTMENT OF TRANSPORTATION

DWG. NO. 617.17

p:\4035\dc standard drawings\final\UNCHANGED\617-17.DGN
Friday, April 03, 2009 AT 12:21 PM

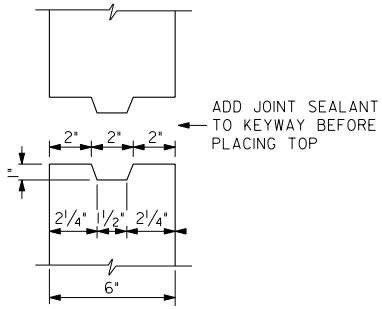

ELECTRICAL MANHOLE - KEYWAY DETAIL

(FOR MANHOLES LARGER THAN 3' x 3' x 3')

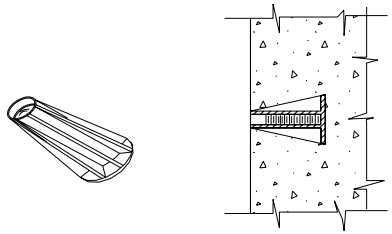

- ½" I.D. x 2¾" DEEP FLARED TO 1¼" AT BASE
- THERMOPLASTIC MATERIAL NON-CORROSIVE, CHEMICAL RESISTANT, NON-CONDUCTIVE
- ULTIMATE STRENGTH BY TEST TO BE AT LEAST 12,600 LBS.

BOLTING INSERT

(FOR ATTACHING CABLE RACKS, ETC. TO SIDEWALLS)

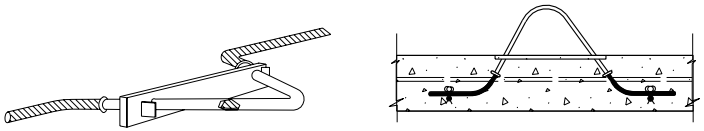

PULLING IRON - TYPE C

- SEVEN (7) STRAND, ½" DIA. CARBON STEEL ROPE, STRESS RELIEVED WITH YIELD STRENGTH OF 270 KIPS.
- 8" HIGH x 22" WIDE AT BASE, FASTENED TO REBAR
- EXPOSED PORTION TOTALLY ENCAPSULATED IN DURABLE, NON-HYDROSCOPIC PLASTIC MATERIAL.

p:\4035\dc standard drawings\final\UNCHANGED\617-18.DGN
Friday, April 03, 2009 AT 12:21 PM

DATE	APPR.	REFERENCE
REVISED		
ISSUED:		

RECOMMENDED: DEPUTY CHIEF ENGINEER

APPROVED: CHIEF TRANSPORTATION ENGINEER

TRAFFIC SIGNAL DISTRICT
ELECTRICAL MANHOLE DETAILS - 2

d. DISTRICT OF COLUMBIA
DEPARTMENT OF TRANSPORTATION

DWG. NO. **617.18**

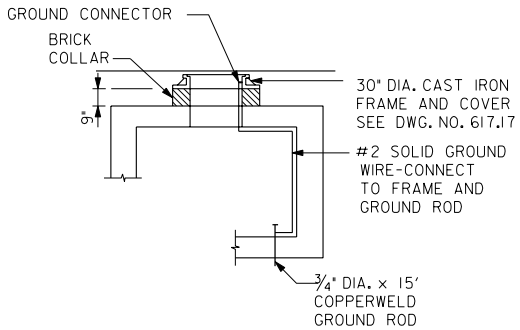

GROUNDING DETAIL

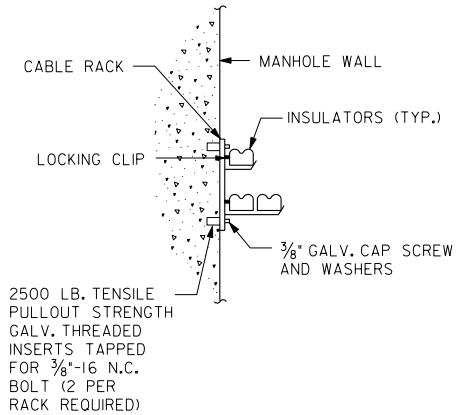

CABLE RACK ASSEMBLY

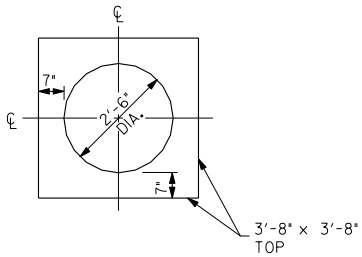

3' x 3' x 3' ELECTRICAL MANHOLE

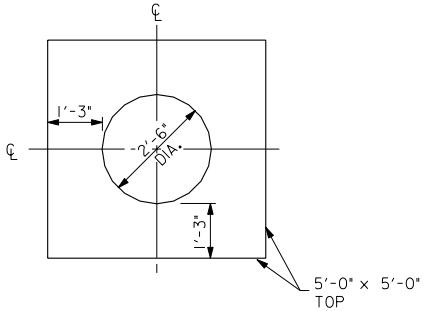

4' x 4' x 4' (OR 4' x 4' x 6') ELECTRICAL MANHOLE

ACCESS HOLE LAYOUT

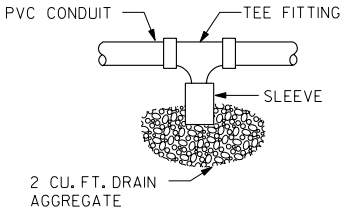

CONDUIT DRAIN DETAIL

DATE	APPR.	
REVISED		
ISSUED:		
		REFERENCE

RECOMMENDED: DEPUTY CHIEF ENGINEER

APPROVED: CHIEF TRANSPORTATION ENGINEER

TRAFFIC SIGNAL DISTRICT ELECTRICAL MANHOLE DETAILS - 3

d. DISTRICT OF COLUMBIA
DEPARTMENT OF TRANSPORTATION

DWG. NO. 617.19

p:\4035\dc standard drawings\final\UNCHANGED\617-19.DGN
Friday, April 03, 2009 AT 12:21 PM

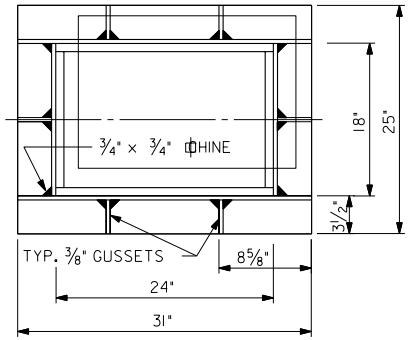

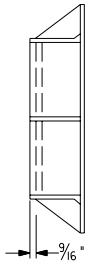

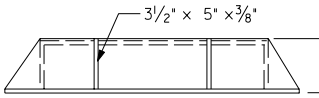

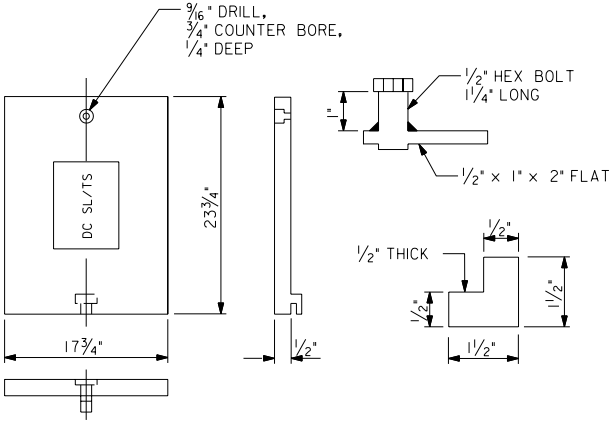

FRAME AND COVER

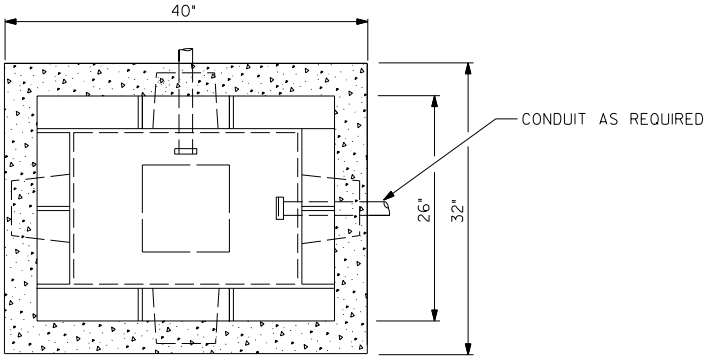

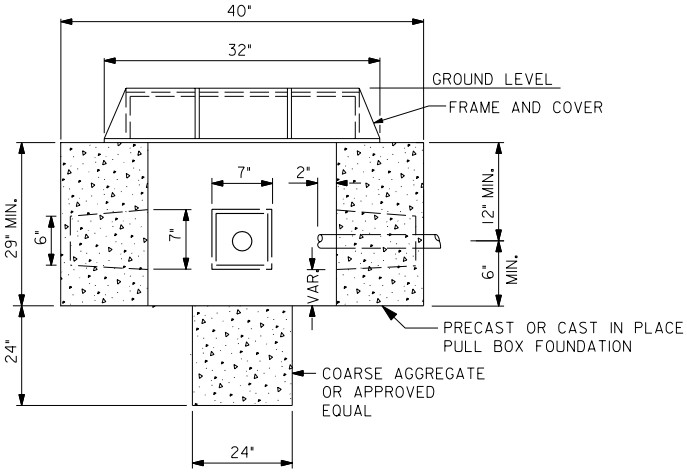

PULL BOX INSTALLATION

NOTES:

1. PULL BOX AND HANDBOX CONCRETE TO SATISFY D.C. SPECIFICATION 803.01 (3500 PSI).

2. SEE DWG. NO. 617.14 : GROUND ROD MAY BE REQUIRED IF MAST ARM POLE FOUNDATION IS CONNECTED TO THE PULL BOX.

DATE	APPR.	REFERENCE
REVISED		
ISSUED:		

RECOMMENDED: DEPUTY CHIEF ENGINEER

APPROVED: CHIEF TRANSPORTATION ENGINEER

TRAFFIC SIGNAL DISTRICT PULL BOX DETAILS

d. DISTRICT OF COLUMBIA
DEPARTMENT OF TRANSPORTATION

DWG. NO. 617.20

p:\4035\dc standard drawings\final\UNCHANGED\617-20.DGN
Friday, April 03, 2009 AT 12:21 PM

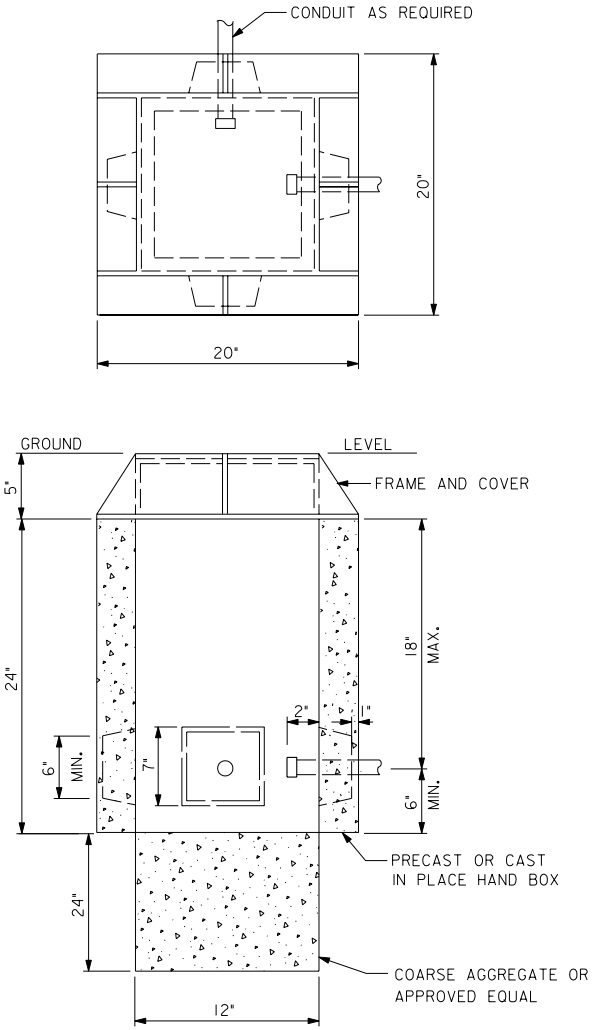

HAND BOX INSTALLATION

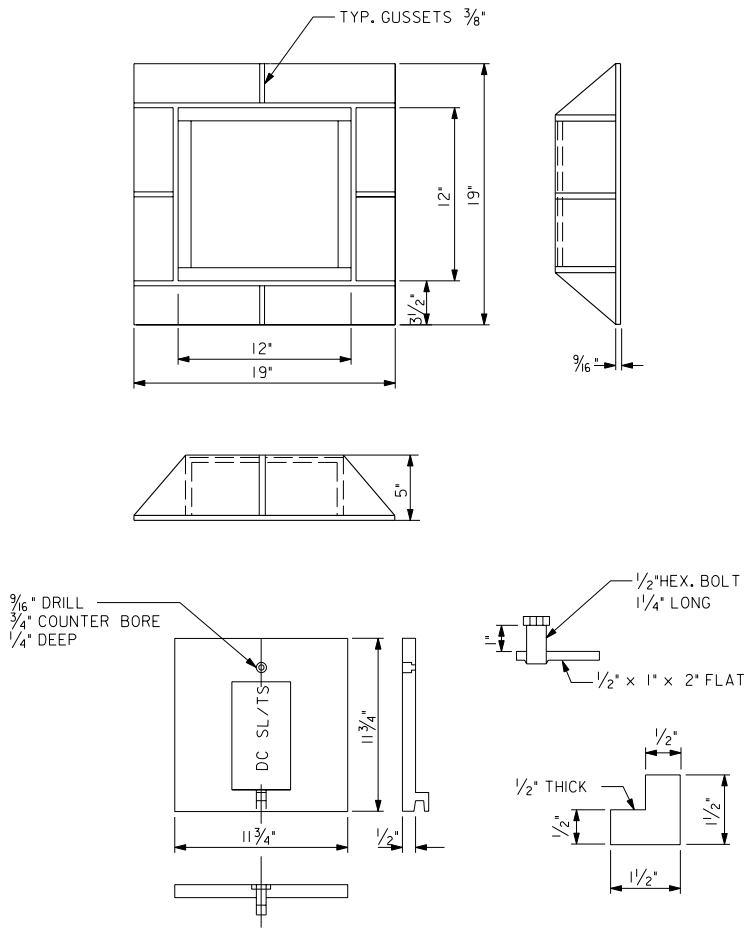

HAND BOX FRAME AND COVER

NOTES:

1. FOR PULL BOX AND HANDBOX CONCRETE, SEE DWG. NO. 617.20.

			RECOMMENDED: DEPUTY CHIEF ENGINEER
DATE	APPR.		APPROVED: CHIEF TRANSPORTATION ENGINEER
REVISED			
ISSUED:		REFERENCE	

TRAFFIC SIGNAL DISTRICT HAND BOX DETAILS

d. DISTRICT OF COLUMBIA
DEPARTMENT OF TRANSPORTATION

DWG. NO. 617.21

p:\4035\dc standard drawings\final\UNCHANGED\617-21.DGN
Friday, April 03, 2009 AT 12:21 PM

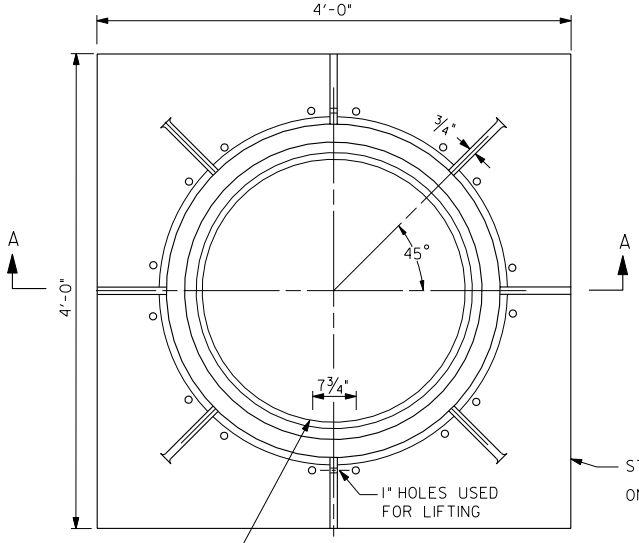

PLAN

STOCK NO 2106-24 SHALL APPEAR ON THE CASTING. APPROX. WEIGHT 820 LBS

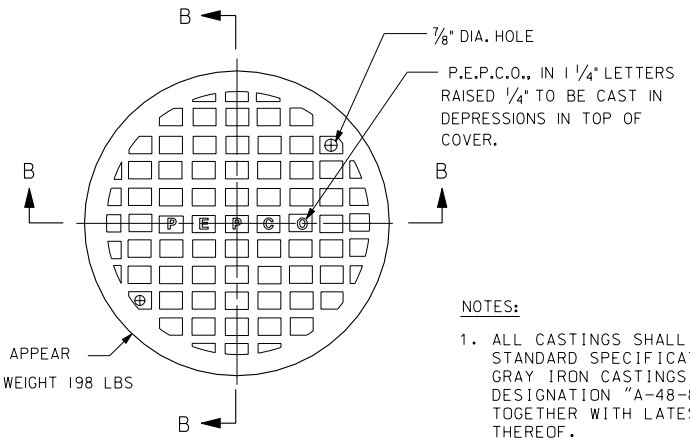

TOP

NOTES:

1. ALL CASTINGS SHALL CONFORM TO STANDARD SPECIFICATIONS FOR GRAY IRON CASTINGS. A.S.T.M. DESIGNATION "A-48-83" CLASS 25 TOGETHER WITH LATEST REVISIONS THEREOF.
2. EACH CASTING SHALL BE IDENTIFIED WITH THE MANUFACTURERS NAME OR LOGO.
3. CASTINGS SHALL BE FREE FROM SAND OR BLOW HOLES AND SHARP EDGES.
4. WITH EXCEPTION ONLY TO NOTED TOLERANCES, NO DIMENSION SHALL EXCEED ± 1/16"/FT.

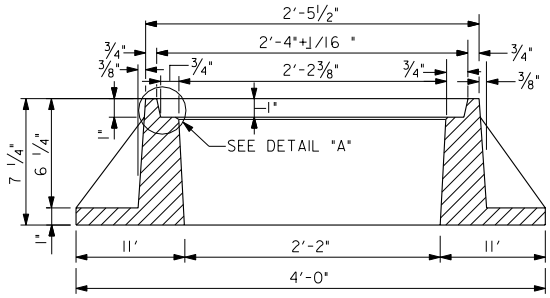

SECTION A-A

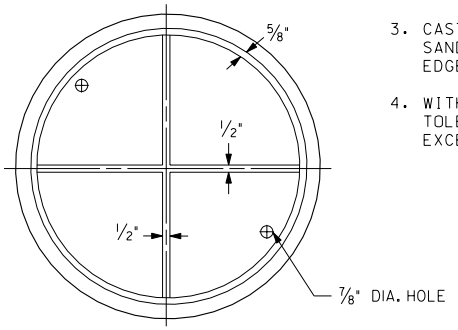

BOTTOM

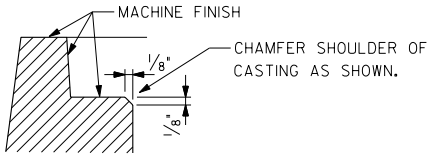

DETAIL "A"

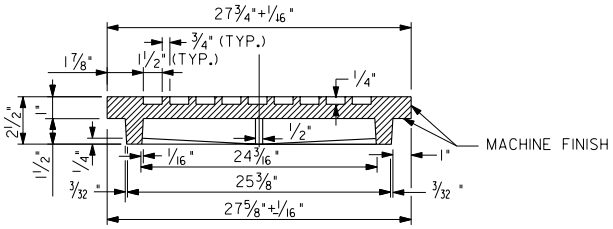

SECTION B-B

DATE	APPR.	
REVISED		
ISSUED:		
		REFERENCE

RECOMMENDED: DEPUTY CHIEF ENGINEER

APPROVED: CHIEF TRANSPORTATION ENGINEER

TRAFFIC SIGNAL 28" MANHOLE FRAME AND COVER - PEPCO

d. DISTRICT OF COLUMBIA
DEPARTMENT OF TRANSPORTATION

DWG. NO. 617.22

p:\4035\dc standard drawings\final\UNCHANGED\617-22.DGN
Friday, April 03, 2009 AT 12:21 PM

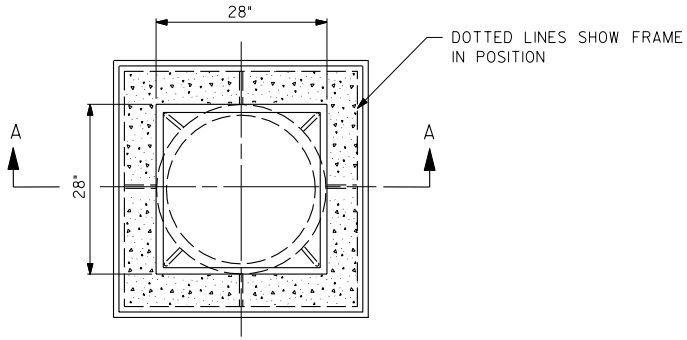

PLAN SHOWING FRAME REMOVED

PLAN

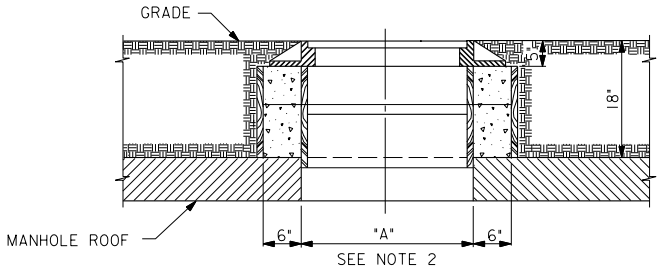

SECTION A-A

SIDEWALK FRAME IN LAWNS

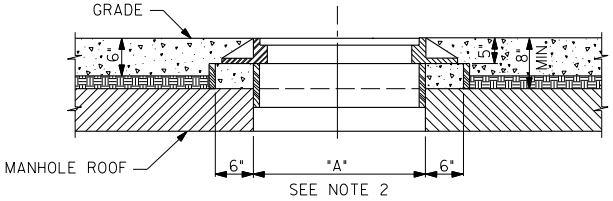

SECTION A-A

SIDEWALK FRAME-LEVEL GRADE

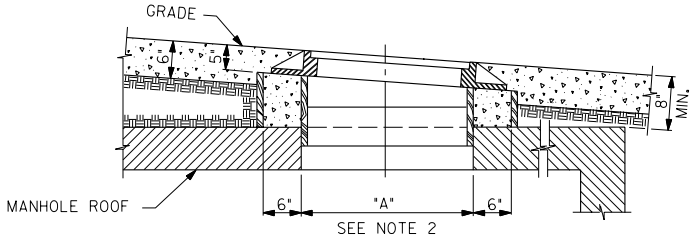

SECTION A-A

SIDEWALK FRAME-INCLINED GRADE

NOTES:

1. FOR ROADWAY FRAME IN INCLINED GRADES USE DIMENSIONS SHOWN FOR ROADWAY FRAME, LEVEL GRADES, AND CONSTRUCTION AS SHOWN FOR SIDEWALK FRAME, INCLINED GRADE.

2. DIMENSION "A"
   28" FOR SINGLE COVER & FRAME
   40" FOR DOUBLE COVER & FRAME

3. REMOVE FORMS AFTER SETTING FRAME AND GRATINGS.

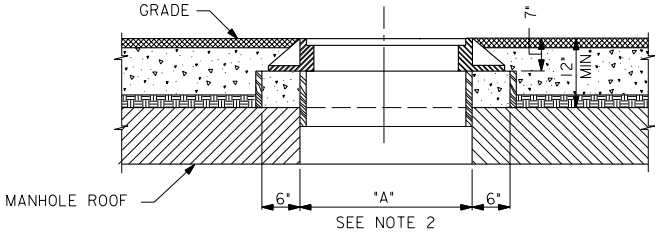

SECTION A-A

ROADWAY FRAME-LEVEL GRADE

DATE	APPR.	
REVISED		
ISSUED:		
		REFERENCE

RECOMMENDED: DEPUTY CHIEF ENGINEER

APPROVED: CHIEF TRANSPORTATION ENGINEER

TRAFFIC SIGNAL DISTRICT MANHOLE FRAME AND COVER INSTALLATION - PEPCO

d. DISTRICT OF COLUMBIA
DEPARTMENT OF TRANSPORTATION

DWG. NO. 617.23

p:\4035\dc standard drawings\final\UNCHANGED\617-23.DGN
Friday, April 03, 2009 AT 12:21 PM

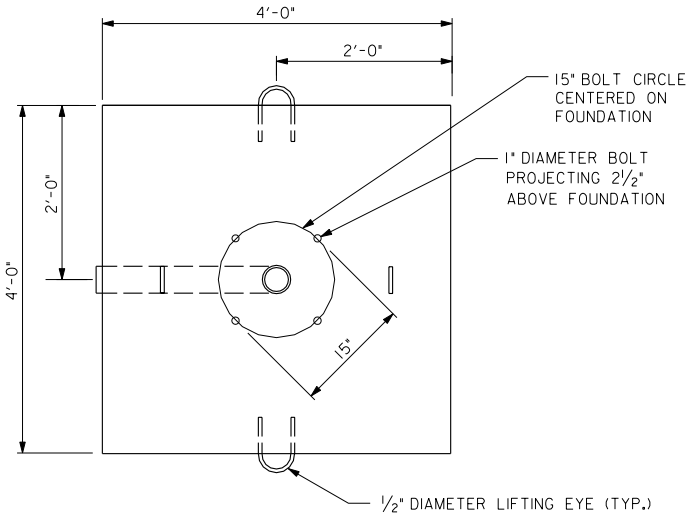

TOP VIEW

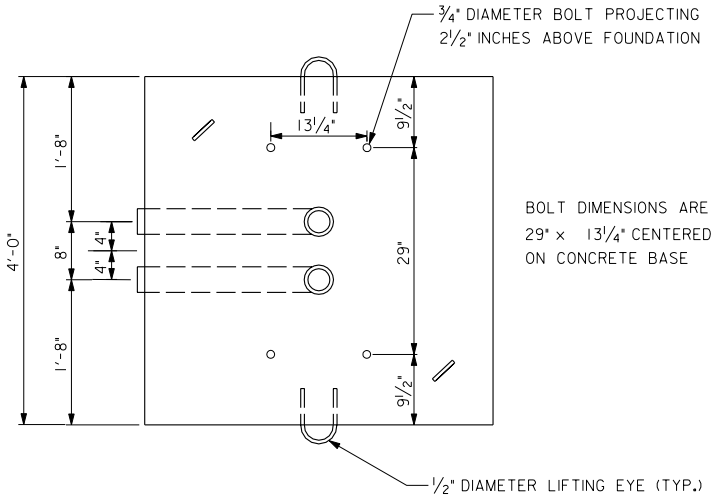

TOP VIEW

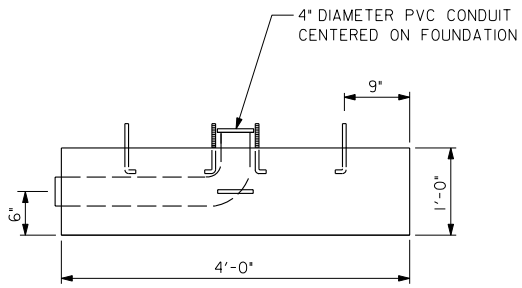

FRONT VIEW

TEMPORARY PORTABLE CONCRETE
BASE FOR STEEL TRAFFIC SIGNAL POLE

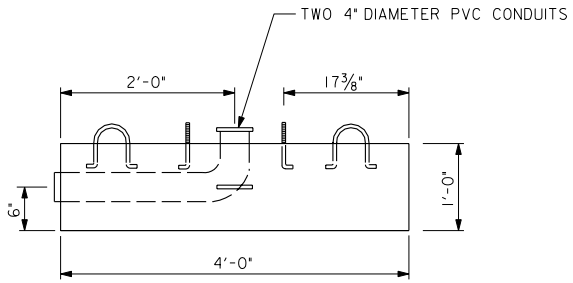

FRONT VIEW

TEMPORARY PORTABLE CONCRETE
BASE FOR TRAFFIC SIGNAL CONTROLLER

NOTES:

1. THE PCC CONCRETE COMPRISING BOTH TEMPORARY PORTABLE CONCRETE BASES SHALL BE CLASS F AND CONFORM WITH THE PROVISIONS OF DDOT STD. SPECIFICATION 817.

2. AN ADAPTOR BASE SHALL BE USED WHEN IT IS NECESSARY TO PLACE A CONTROLLER OR A COMMUNICATIONS TERMINATION CABINET ON A TEMPORARY PORTABLE CONCRETE BASE.

DATE	APPR.	REFERENCE
REVISED		
ISSUED:		

RECOMMENDED: DEPUTY CHIEF ENGINEER

APPROVED: CHIEF TRANSPORTATION ENGINEER

TRAFFIC SIGNAL
PORTABLE CONCRETE BASE

d. DISTRICT OF COLUMBIA
DEPARTMENT OF TRANSPORTATION

DWG. NO. **617.24**

p:\4035\dc standard drawings\final\UNCHANGED\617-24.DGN
Friday, April 03, 2009 AT 12:21 PM

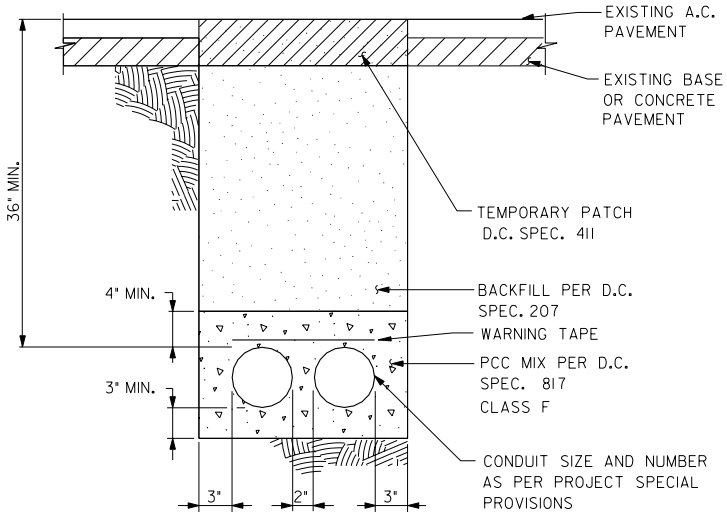

CONDUIT INSTALLATION-ASPHALT CONCRETE SURFACED STREETS

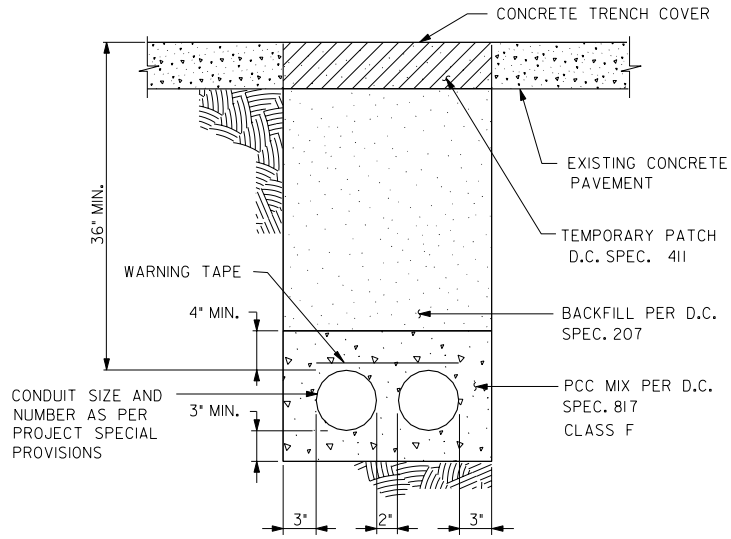

CONDUIT INSTALLATION-PCC SURFACED STREETS

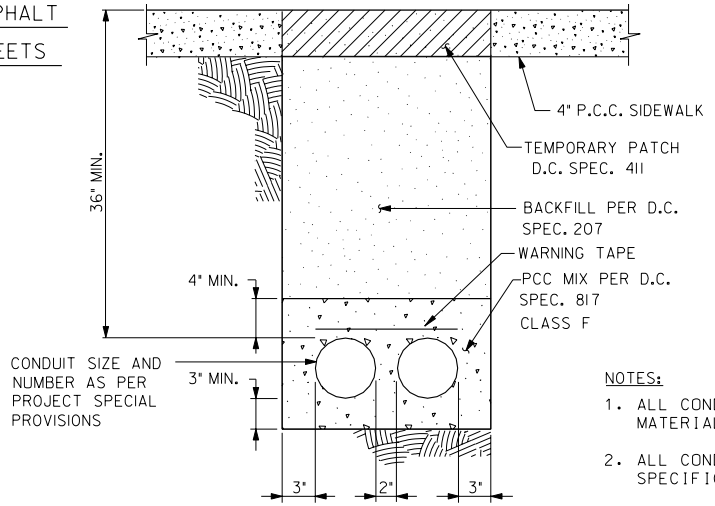

CONDUIT INSTALLATION UNDER SIDEWALK

NOTES:

1. ALL CONDUIT SHALL BE COMPOSED OF POLYVINYLCHLORIDE (PVC) MATERIAL, UNLESS OTHERWISE SPECIFIED IN PROJECT PLANS.
2. ALL CONDUIT SHALL CONFORM WITH THE PROVISIONS IN DDOT STD. SPECIFICATION 617.14 AND 617.15 .
3. THIS DRAWING SUPPLEMENTS SPECIFIC PROJECT PLANS AND SPECIAL PROVISIONS, AS APPLICABLE.
4. ALL CONDUIT SHALL BE PVC TYPE 40 UNLESS OTHERWISE SPECIFIED.
5. TRENCH SURFACE REPAIR DETAIL, SEE STD. DWG. 207.01.

DATE	APPR.	REFERENCE
REVISED		
ISSUED:		

RECOMMENDED: DEPUTY CHIEF ENGINEER

APPROVED: CHIEF TRANSPORTATION ENGINEER

TRAFFIC SIGNAL ELECTRICAL CONDUIT INSTALLATION DETAILS

d. DISTRICT OF COLUMBIA
DEPARTMENT OF TRANSPORTATION

DWG. NO. 617.25

p:\4035\dc standard drawings\final\UNCHANGED\617-25.DGN
Friday, April 03, 2009 AT 12:21 PM

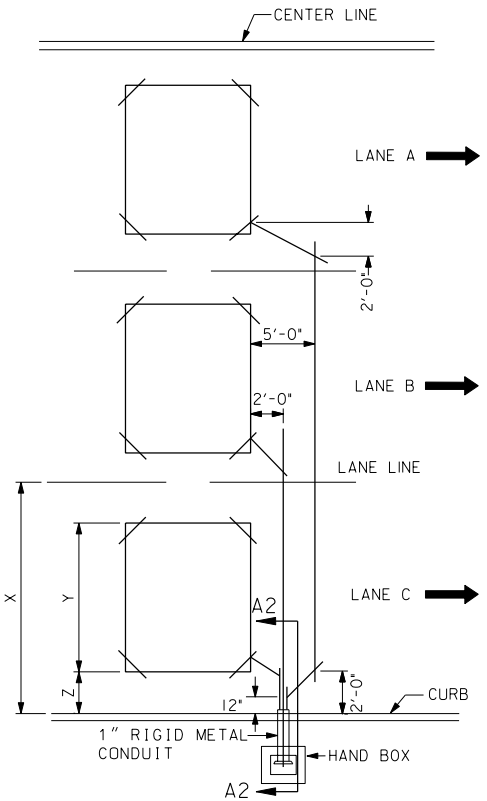

LOOP FEEDER LAYOUT

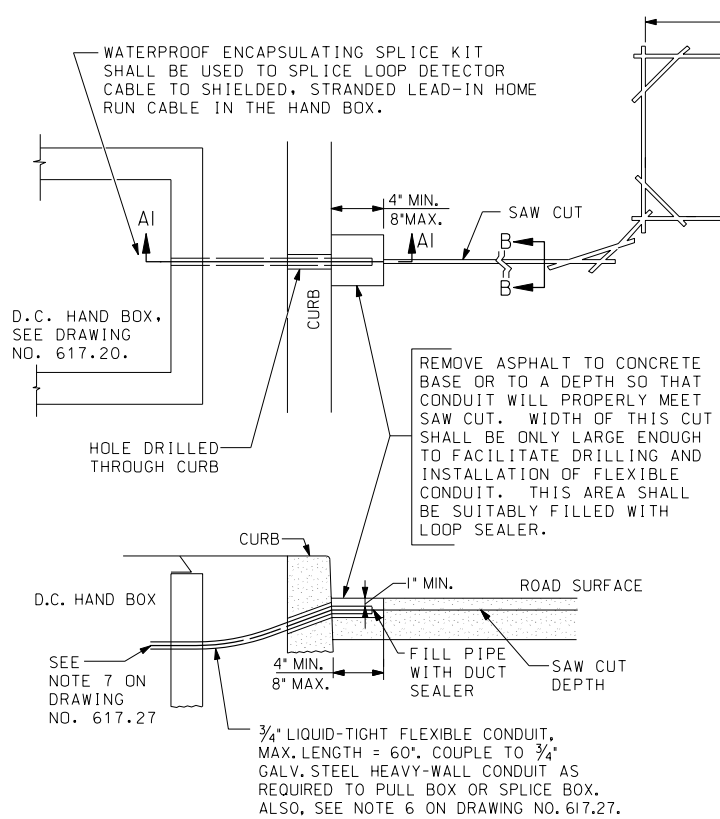

SECTION A1-A1

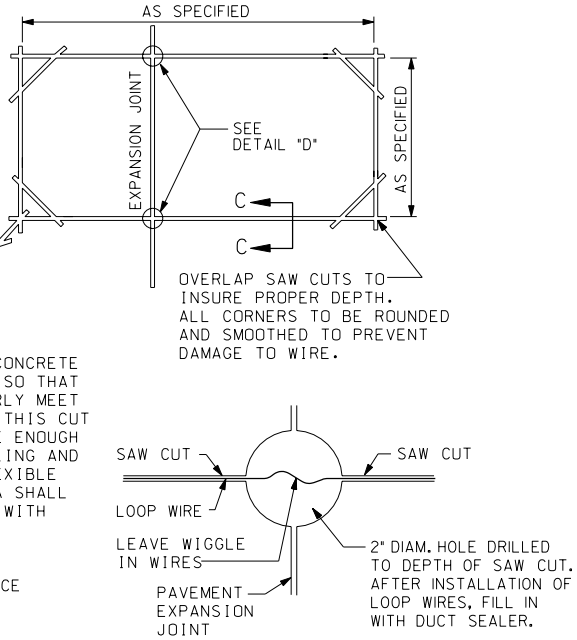

DETAIL "D"

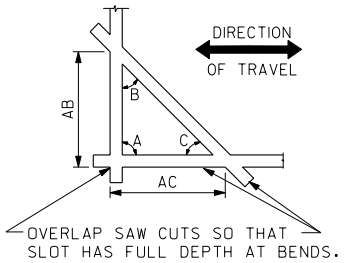

CORNER CUT DETAILS

NOTES:

1. FOR ANY ANGLE A, ANGLE B SHALL ALWAYS BE EQUAL TO ANGLE C. THIS IS DONE BY ENSURING THAT DISTANCE AB ALWAYS EQUALS DISTANCE AC.
2. AB & AC ARE TYPICALLY 1'-6".
3. (X-Y)/2=Z - APPLIES TO ALL LANES.

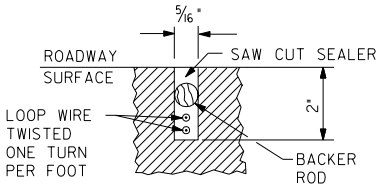

SECTION B-B

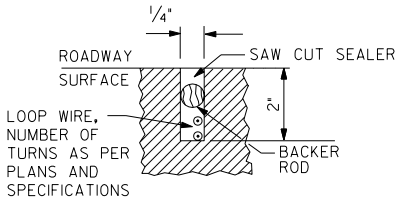

SECTION C-C

DATE	APPR.	REFERENCE
REVISED		
ISSUED:		

RECOMMENDED: DEPUTY CHIEF ENGINEER

APPROVED: CHIEF TRANSPORTATION ENGINEER

TRAFFIC SIGNAL LOOP DETECTOR INSTALLATION DETAILS - 1

d. DISTRICT OF COLUMBIA
DEPARTMENT OF TRANSPORTATION

DWG. NO. 617.26

p:\4035\dc standard drawings\final\UNCHANGED\617-26.DGN
Friday, April 03, 2009 AT 12:21 PM

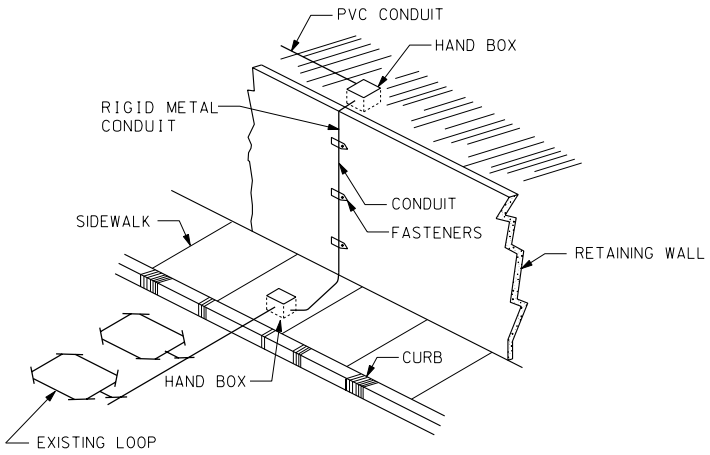

DETAIL - CONDUIT ON RETAINING WALL

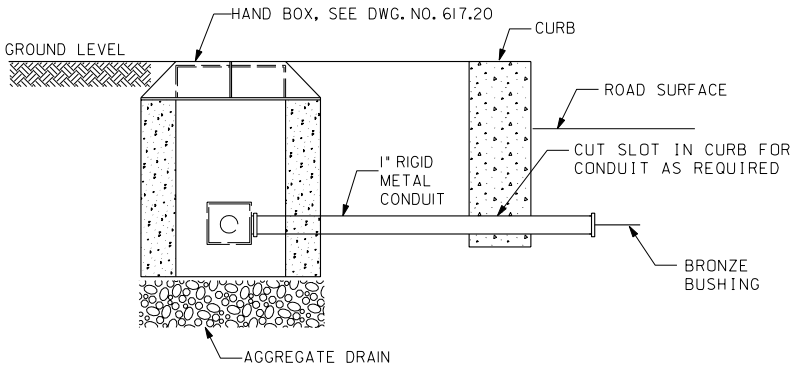

SECTION A2-A2

SEE DWG. 617.26

NOTE:

CONSULT PROJECT PLANS AND PROJECT SPECIAL PROVISIONS. FOR ADDITIONAL DETAILS SEE DWG. NO. 617.20

NOTES:

1. FLEXIBLE CONDUIT SHALL BE INSTALLED SO THAT IT RECEIVES THE LOOP WIRES ON A STRAIGHT ANGLE (LOOP WIRES SHALL BE INSTALLED IN BOTTOM OF SAW CUT.)

2. THE HOLE TO RECEIVE THE FLEXIBLE CONDUIT SHALL BE SUFFICIENTLY BELOW THE ROADWAY SURFACE SO THAT THERE IS A MIN. OF ONE-INCH COVER ON TOP OF THE FLEXIBLE CONDUIT WHEN INSTALLED.

3. IF THERE IS INSUFFICIENT ASPHALT COVER TO ACCOMPLISH THE ABOVE, A PORTION OF THE CONCRETE BASE SHALL BE REMOVED BEFORE DRILLING.

4. WHEN THERE IS A CONCRETE ROAD AT THE CURB, A SUFFICIENT AMOUNT OF THE ROADWAY SHALL BE REMOVED BEFORE DRILLING THROUGH CURB.

5. IN NO CASE SHALL A LARGE PORTION OF THE ROADWAY SURFACE BE REMOVED. THIS REMOVED PORTION OF ROADWAY SHALL BE FILLED WITH LOOP SEALER.

6. WHENEVER GRANITE CURB IS ENCOUNTERED, NO DRILLING WILL BE PERMITTED; INSTEAD USE CURB JOINTS, AS DIRECTED BY ENGINEER.

7. THE START OF THE WIRE LOOP SHALL BE MARKED WITH COLORED TAPE IN THE HAND BOX AND SHALL BE CONNECTED TO THE BLACK WIRE OF THE SHIELDED HOME RUN CABLE TO THE CONTROLLER.

8. LOOP DETECTOR CABLE SLOT SEALANT AND AMPLIFIERS (IF REQUIRED) SHALL CONFORM WITH DDOT STD. SPECIFICATION, SECTION 819.

9. LOOP DETECTOR CONTINUITY SHALL BE ASCERTAINED AFTER INSTALLATION. LOOPS FAILING THE MEGGAR TEST WILL BE RECUT UNTIL THEY PASS THE TEST.

10. WHEN APPLICABLE, LOOP DETECTORS SHALL BE CUT IN THE PCC BASE BEFORE ASPHALT IS LAID. NOTE 9 SHALL BE SATISFIED BEFORE AND AFTER THE SURFACE COURSE IS APPLIED. LOOPS FAILING MEGGAR TEST SHALL BE RECUT PREFERRABLY IN THE PCC BASE OR IN THE SURFACE COURSE ONLY WHEN NECESSARY.

DATE	APPR.	
REVISED		
ISSUED:		
		REFERENCE

RECOMMENDED: DEPUTY CHIEF ENGINEER

APPROVED: CHIEF TRANSPORTATION ENGINEER

TRAFFIC SIGNAL LOOP DETECTOR INSTALLATION DETAILS - 2

d. DISTRICT OF COLUMBIA
DEPARTMENT OF TRANSPORTATION

DWG. NO. **617.27**

p:\4035\dc standard drawings\final\UNCHANGED\617-27.DGN
Friday, April 03, 2009 AT 12:21 PM

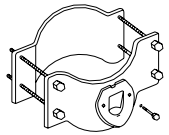

DETAIL A

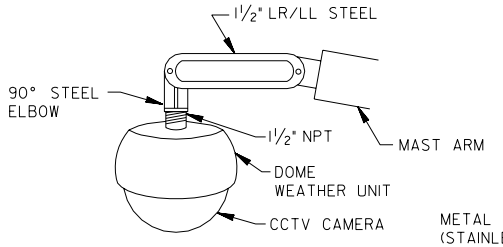

DETAIL B

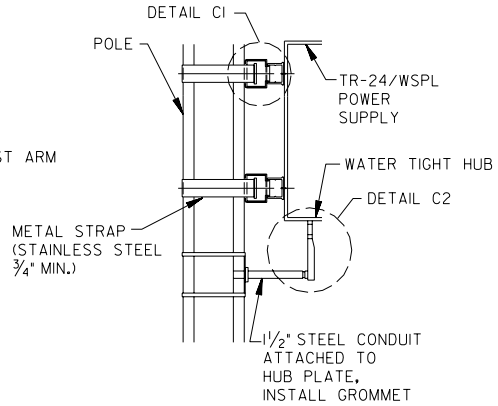

DETAIL C

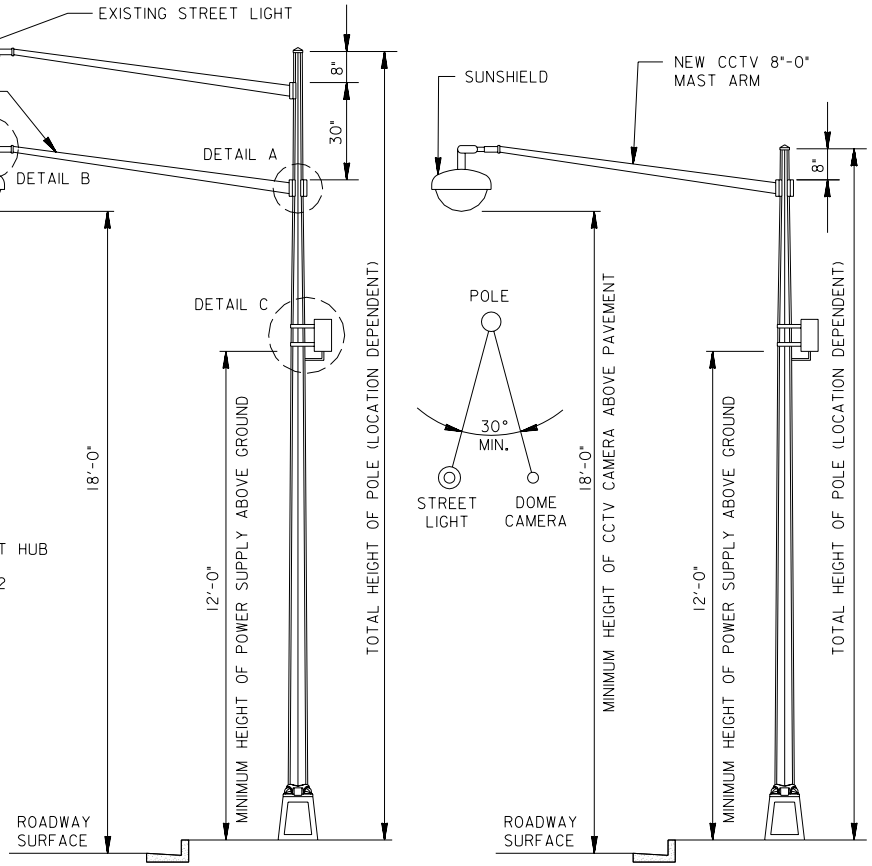

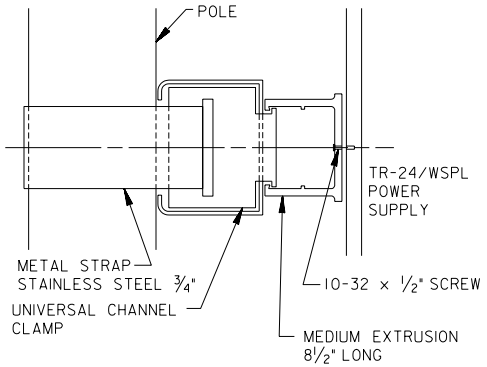

DETAIL CI

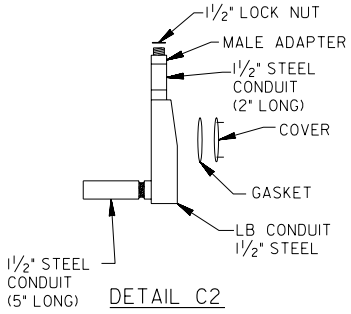

DETAIL C2

CCTV INSTALLATION NOTES

1. RUN ALL WIRING INSIDE THE POLE AND PROVIDE STRAIN RELIEF AND SUPPORT FOR ALL POWER AND CAMERA CONTROL CABLES.
2. THE 1½" LB CONDUIT SHALL BE ATTACHED TO A THREADED MAST ARM BY 1½" × 6" NIPPLE. THE THREADED MAST ARM SHALL BE MANUFACTURED AS PER DDOT STANDARD SPECIFICATION, SECTION 618. ALL CONNECTIONS IN THE FIELD SHALL BE WATER TIGHT. THIS NIPPLE SHALL BE WELDED TO THE END OF THE 8 FT. STEEL SINGLE MEMBER MAST ARM. 1½" OF THREADS SHALL PROTRUDE FROM THE END OF MAST ARM FOR MOUNTING OF LB CONDUIT AND CAMERA HARDWARE.
3. WEATHER DOME SHALL BE MOUNTED AS IS SHOWN IN THE CONTRACT PLANS.
4. THE FOLLOWING SURFACES SHALL BE SEALED WITH SILICON TYPE SEALANT:
   A. THREADED CONNECTIONS
   B. MATING SURFACE OF COVER TO GASKET AND CONDUIT BODY.
5. ALL METALLIC SURFACES SHALL BE PRIMED AND PAINTED BLACK TO MATCH DDOT STANDARD SPECIFICATION, SECTION 618.
6. STAINLESS STEEL SIGNAL BRACKET ASTRO-BRACKET SHALL BE USED TO ATTACH THE CAMERA DOME ON MAST ARMS LONGER THAN 8 FT.

DATE	APPR.	REFERENCE
REVISED		
ISSUED:		

RECOMMENDED: DEPUTY CHIEF ENGINEER

APPROVED: CHIEF TRANSPORTATION ENGINEER

CCTV TYPICAL INSTALLATION DETAIL MAST ARM MOUNT

DISTRICT OF COLUMBIA
DEPARTMENT OF TRANSPORTATION

DWG. NO. 617.28

p:\4035\dc standard drawings\final\UNCHANGED\617-28.DGN
Friday, April 03, 2009 AT 12:21 PM

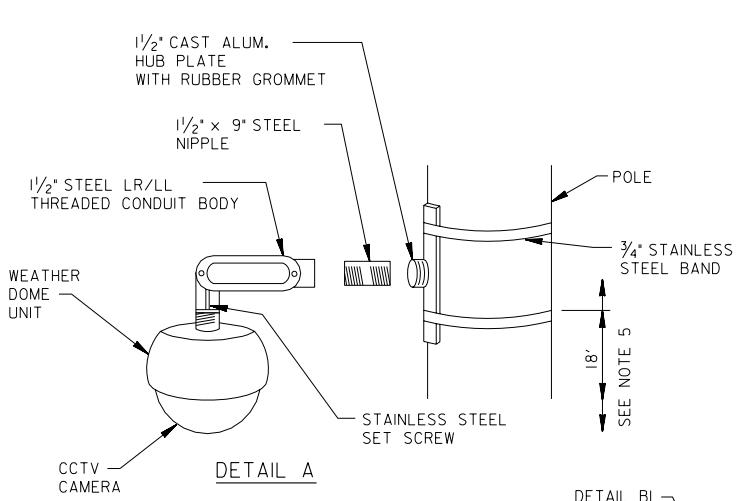

DETAIL A

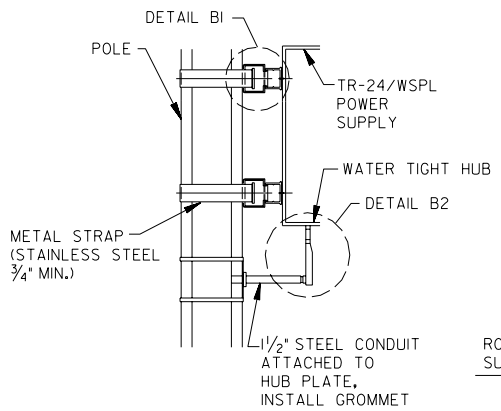

DETAIL B

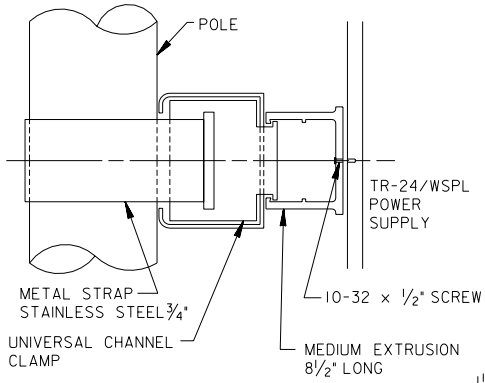

DETAIL BI

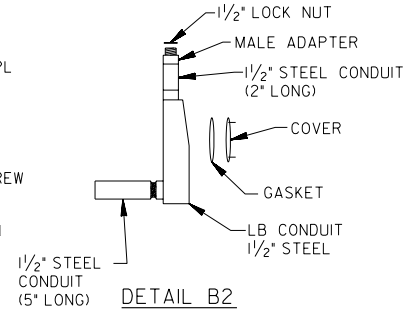

DETAIL B2

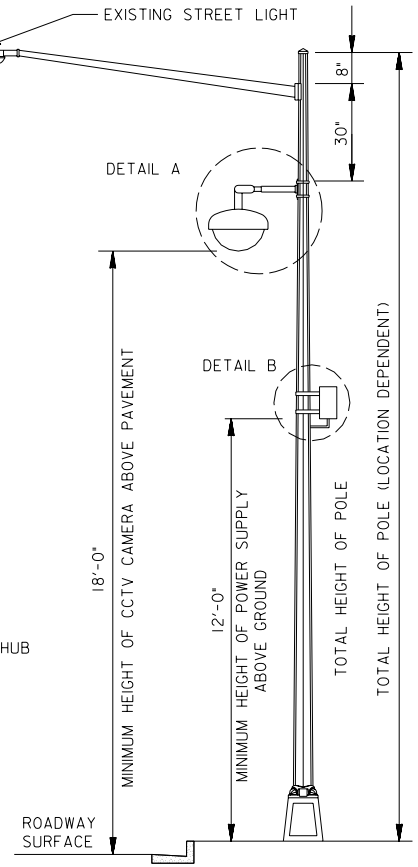

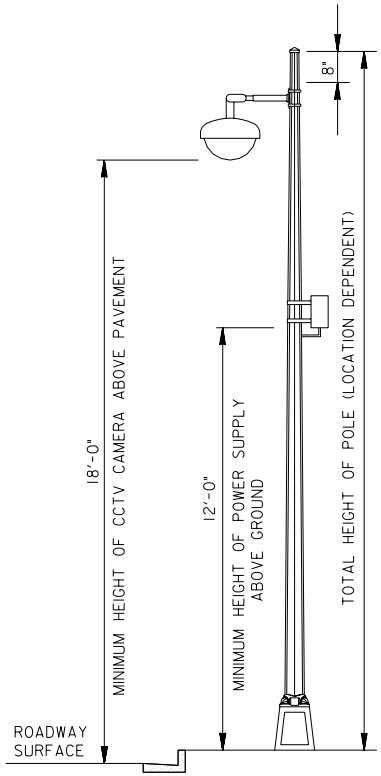

CCTV INSTALLATION NOTES

1. RUN ALL WIRING INSIDE THE POLE AND PROVIDE STRAIN RELIEF AND SUPPORT FOR ALL POWER AND CAMERA CONTROL CABLES.
2. THE FOLLOWING SURFACES SHALL BE SEALED WITH SILICON TYPE SEALANT:
   A. THREADED CONNECTIONS
   B. MATING SURFACE OF COVER TO GASKET AND CONDUIT BODY.
3. HUB PLATE, NIPPLE AND CONDUIT BODY ARE TO BE PAINTED BLACK TO MATCH DDOT STANDARD SPECIFICATION, SECTION 618.
4. CONTRACTOR SHALL DRILL 1¼" DIA. HOLE INTO POLE AT POWER SUPPLY FOR ELECTRICAL CONNECTIONS. REAM HOLE OF BURRS. INSTALL GROMMET.
5. HEIGHT OF DOME SHALL BE NOT LESS THAN 18 FT. ABOVE PAVEMENT.

DATE	APPR.	REFERENCE
REVISED		
ISSUED:		

RECOMMENDED: DEPUTY CHIEF ENGINEER

APPROVED: CHIEF TRANSPORTATION ENGINEER

CCTV
TYPICAL INSTALLATION DETAIL
POLE MOUNT

DISTRICT OF COLUMBIA
DEPARTMENT OF TRANSPORTATION

DWG. NO. 617.29

p:\4035\dc standard drawings\final\UNCHANGED\617-29.DGN
Friday, April 03, 2009 AT 12:21 PM

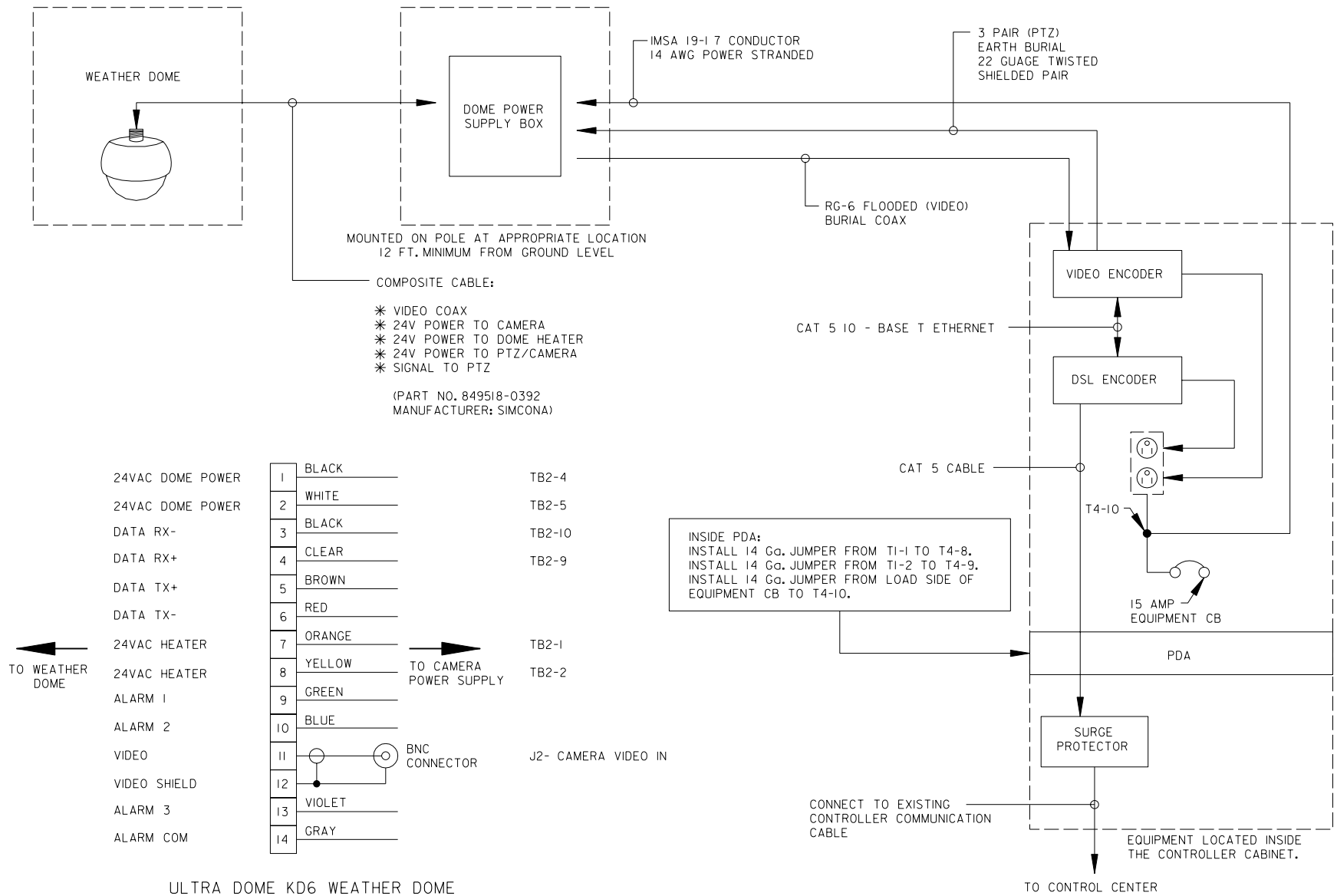

ULTRA DOME KD6 WEATHER DOME
MATING CONNECTOR (J2)

MATING CONNECTOR DETAIL FOR CCTV-MAST ARM AND POLE MOUNTING ARRANGEMENT

			RECOMMENDED: DEPUTY CHIEF ENGINEER
DATE	APPR.		APPROVED: CHIEF TRANSPORTATION ENGINEER
REVISED			
ISSUED:		REFERENCE	

CCTV
TYPICAL INSTALLATION DETAIL
COMMUNICATION SCHEMATIC

d. DISTRICT OF COLUMBIA
DEPARTMENT OF TRANSPORTATION

DWG. NO. 617.30

p:\4035\dc standard drawings\final\UNCHANGED\617-30.DGN
Friday, April 03, 2009 AT 12:21 PM

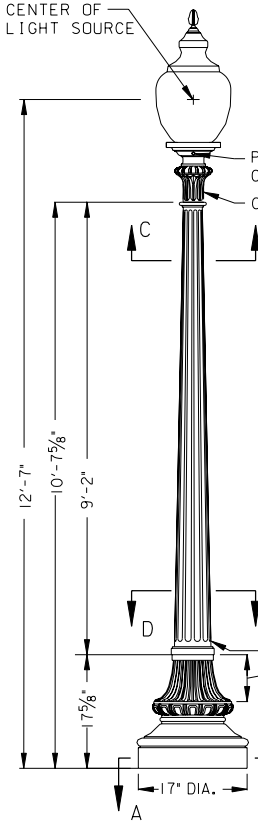

#14 CAST IRON POLE

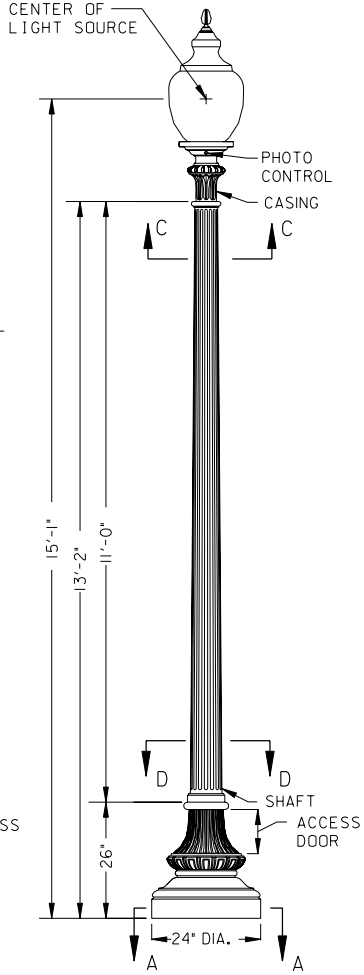

#16 CAST IRON POLE

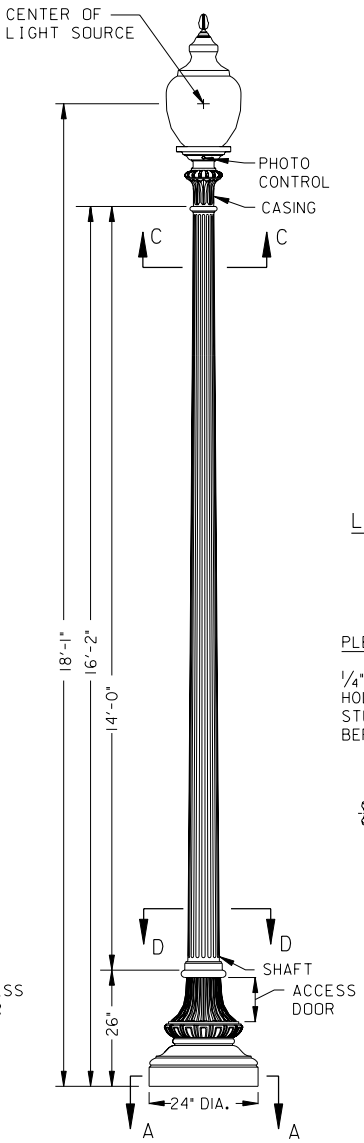

#18 CAST IRON POLE

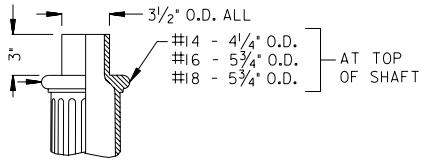

TENON DETAIL

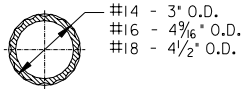

SECTION C-C

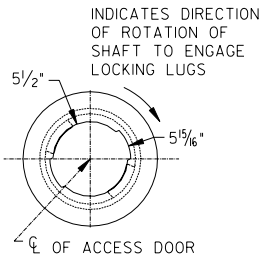

SECTION B-B

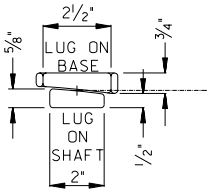

LOCKING LUG DETAIL

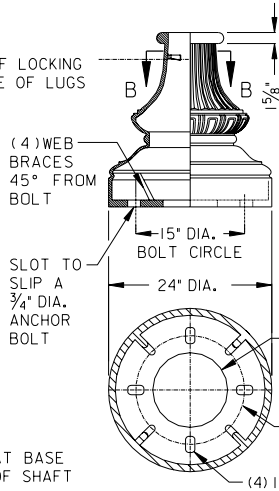

BASE DETAIL

#16 & #18 SECTION A-A

PLEASE NOTE:

1/4" - 20 TAPPED HOLE FOR GROUND STUD TO BE INSERTED BEFORE ASSEMBLY

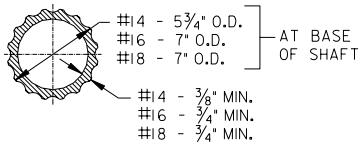

SECTION D-D

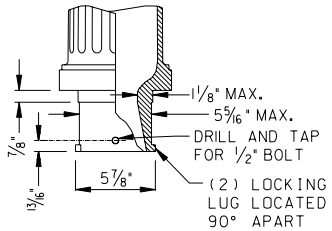

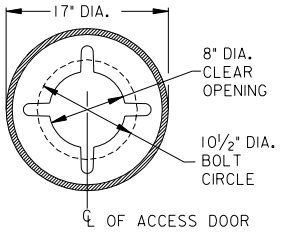

#14 SECTION A-A

DATE	APPR.	
REVISED		
ISSUED:		
		REFERENCE

RECOMMENDED: DEPUTY CHIEF ENGINEER

APPROVED: CHIEF TRANSPORTATION ENGINEER

STREETLIGHT STANDARD POLES - 1

DISTRICT OF COLUMBIA
DEPARTMENT OF TRANSPORTATION

DWG. NO. 618.01

p:\4035\dc standard drawings\final\UNCHANGED\618-01.DGN
Friday, April 03, 2009 AT 12:21 PM

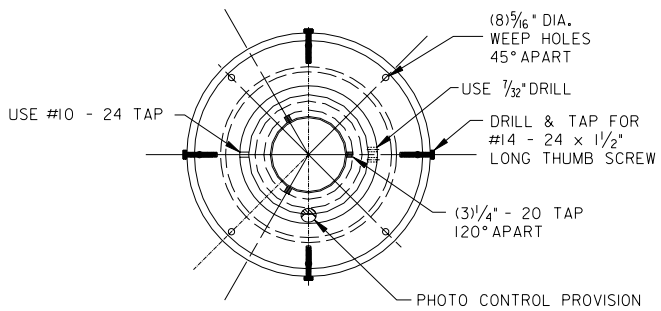

PLAN VIEW

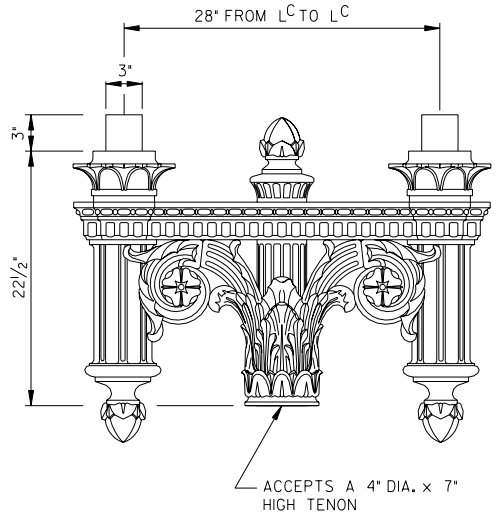

2-WAY BRACKET

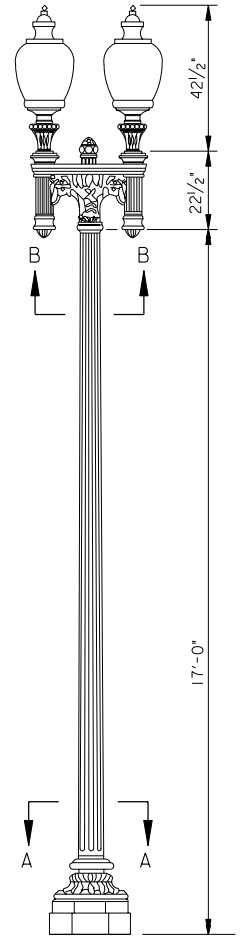

TWIN 20

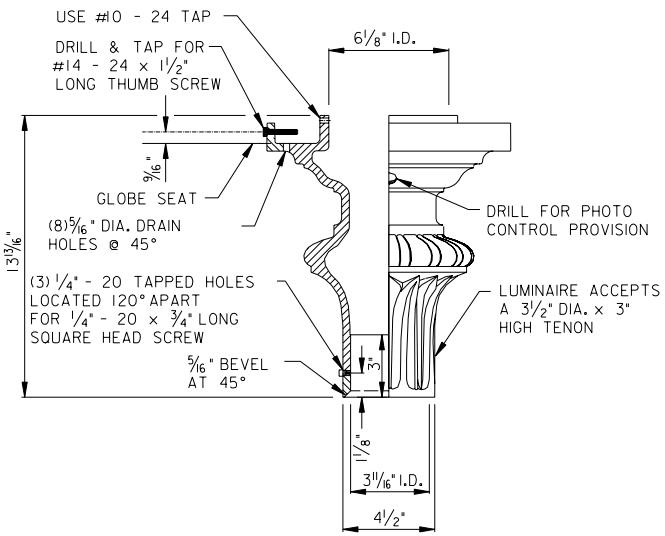

#16, #18 AND TWIN 20 CASING

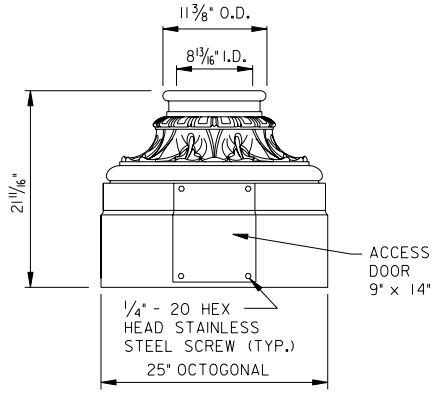

2 PIECE OCTOGONAL BASE

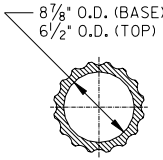

SECTION A-A
SECTION B-B

DATE	APPR.	
REVISED		
ISSUED:		
		REFERENCE

RECOMMENDED: DEPUTY CHIEF ENGINEER

APPROVED: CHIEF TRANSPORTATION ENGINEER

STREETLIGHT STANDARD POLES - 2

d. DISTRICT OF COLUMBIA
DEPARTMENT OF TRANSPORTATION

DWG. NO. 618.02

p:\4035\dc standard drawings\final\UNCHANGED\618-02.DGN
Friday, April 03, 2009 AT 12:21 PM

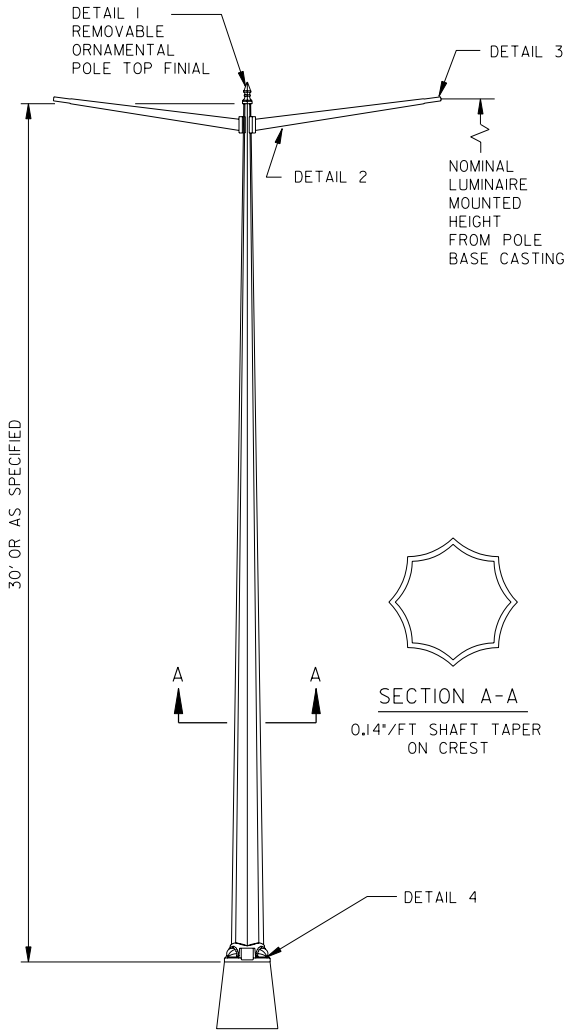

PENDANT POST

SECTION A-A

0.14"/FT SHAFT TAPER
ON CREST

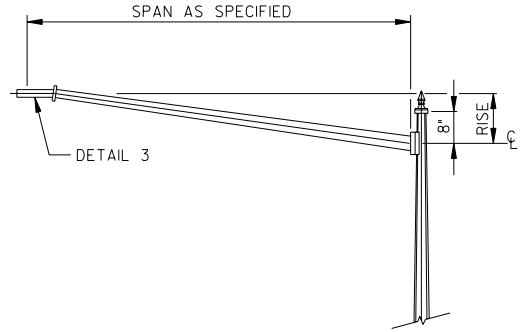

DETAIL 2 - TYPICAL ONE LUMINIARE ARM

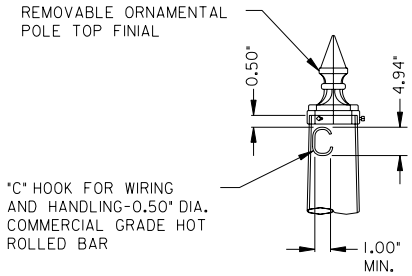

DETAIL 1 - POLE TOP

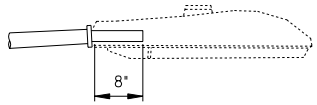

DETAIL 3 - ARM TERMINAL

LEVEL LUMINIARE ON ARM

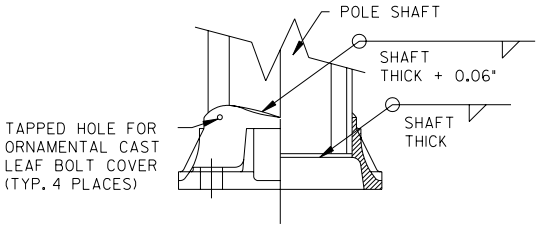

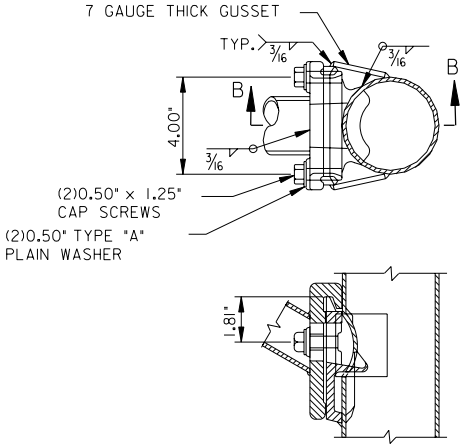

SECTION B-B

LUMINAIRE ARM ATTACHMENT

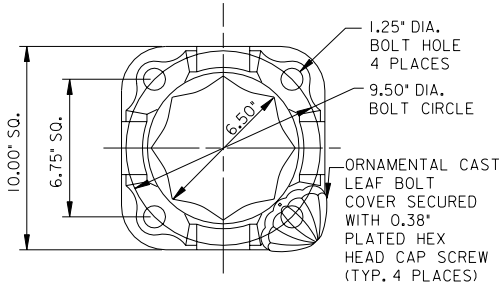

DETAIL 4 - POLE BASE CASTING

			RECOMMENDED: DEPUTY CHIEF ENGINEER
DATE	APPR.		APPROVED: CHIEF TRANSPORTATION ENGINEER
REVISED			
ISSUED:		REFERENCE	

STREETLIGHT PENDANT POLE

d. DISTRICT OF COLUMBIA
DEPARTMENT OF TRANSPORTATION

DWG. NO. **618.03**

p:\4035\dc standard drawings\final\UNCHANGED\618-03.DGN
Friday, April 03, 2009 AT 12:22 PM

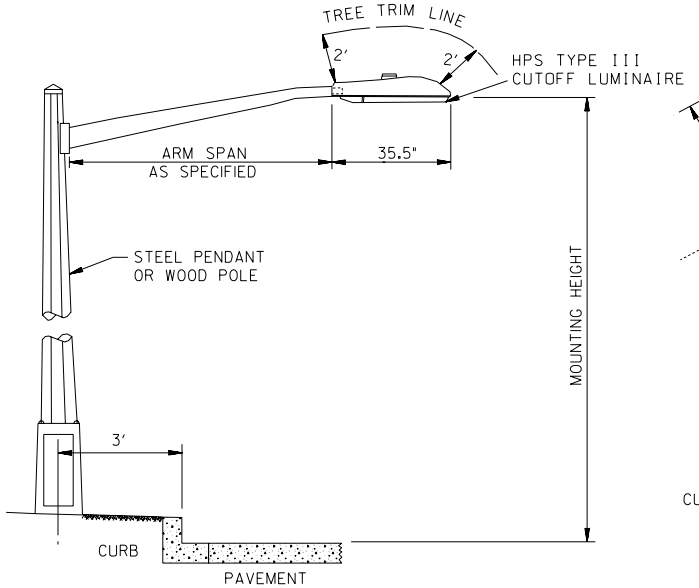

TREE TRIM DETAIL FOR STEEL PENDANT OR WOOD POLE

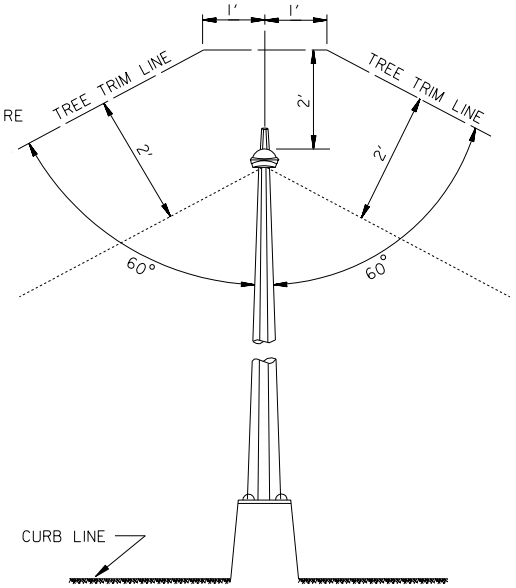

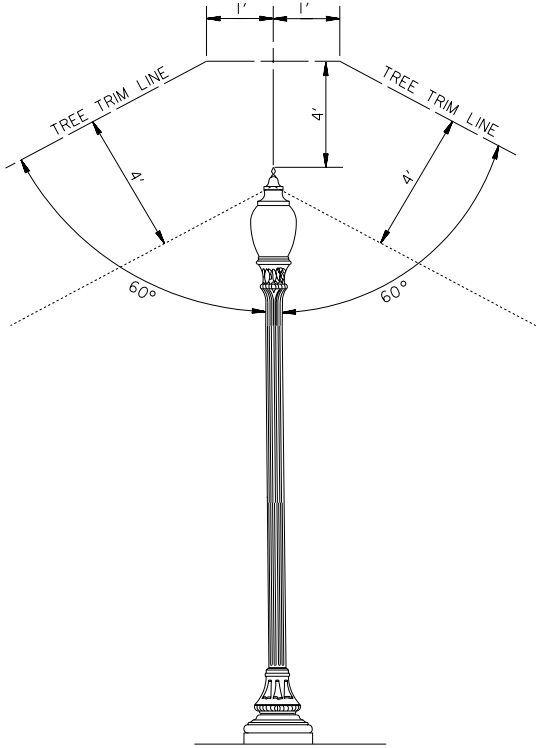

TREE TRIM DETAIL FOR
DECORATIVE STREETLIGHT POLE

p:\4035\dc standard drawings\final\UNCHANGED\618-04.DGN
Friday, April 03, 2009 AT 12:22 PM

DATE	APPR.	
REVISED		
ISSUED:		
		REFERENCE

RECOMMENDED: DEPUTY CHIEF ENGINEER

APPROVED: CHIEF TRANSPORTATION ENGINEER

STREETLIGHT
TREE TRIMMING

d. DISTRICT OF COLUMBIA
DEPARTMENT OF TRANSPORTATION

DWG. NO. **618.04**

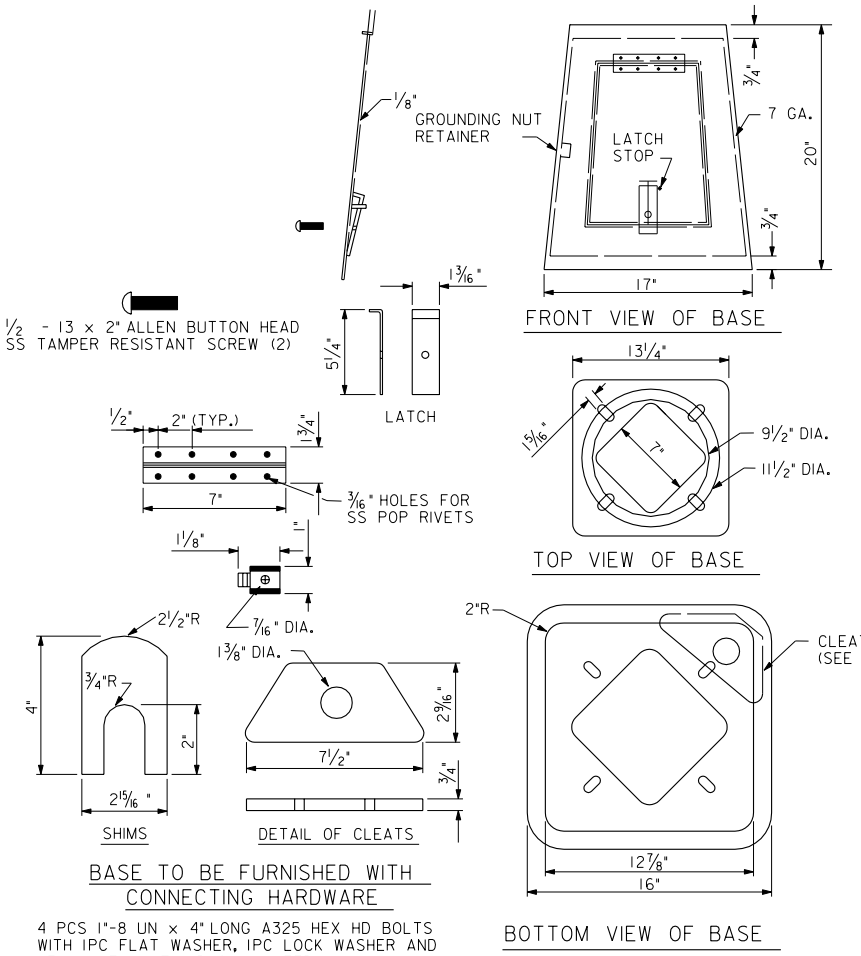

BASE TO BE FURNISHED WITH CONNECTING HARDWARE

4 PCS 1"-8 UN x 4" LONG A325 HEX HD BOLTS WITH IPC FLAT WASHER, IPC LOCK WASHER AND HEAVY HEX NUT H.D. GALVANIZED.

STANDARD TRANSFORMER BASE DETAIL

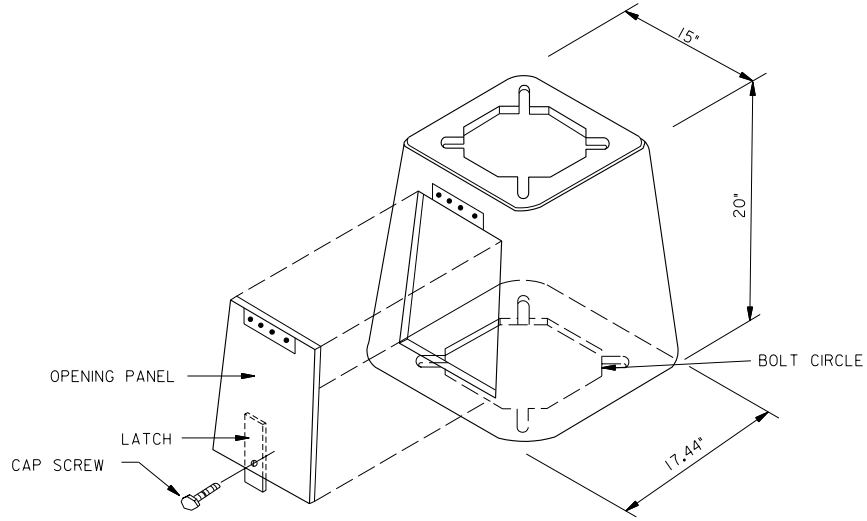

TYPICAL "BREAK-AWAY" CAST ALUMINUM TRANSFORMER BASE

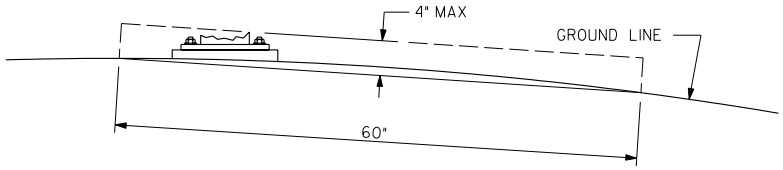

BREAKAWAY SUPPORT STUB HEIGHT MEASUREMENT

GENERAL NOTES:

1. SHEAR BASE SHALL BE CAST IN A PERMANENT MOLD, USING ALUMINUM ALLOY 356F.
2. SHEAR BASE SHALL HAVE THE ABILITY TO SHEAR ON IMPACT WHEN STRUCK BY A VEHICLE WEIGHING 1800 LBS. AND TRAVELING AT SPEEDS BETWEEN 20 MPH AND 60 MPH.
3. WASHERS SHALL BE USED NEXT TO THE CASTING. WASHER SIZE FOR BASE SHOWN IS 2 3/4" x 1/2", BOTH TOP AND BOTTOM BOLTS.
4. DESIGNED IN ACCORDANCE WITH THE LATEST AASHTO STANDARD SPECIFICATION FOR STRUCTURAL SUPPORTS FOR HIGHWAY SIGNS, LUMINAIRES AND TRAFFIC SIGNALS.
5. BASE COMMONLY USED FOR STANDARD HEIGHT STREETLIGHT POLES OF THE PENDANT ARM TYPE, FOR LOCATIONS EXPOSED TO VEHICULAR COLLISION.
6. WEIGHT OF BASE SHOWN IS 36.8 POUNDS.
7. BREAK-AWAY BASE SHALL BE NCHRP REPORT 350, TL-3, CERTIFIED.
8. FOR ELECTRICAL MANHOLE DETAILS, SEE DWG. NOS. 617.15 TO 617.19.

DATE	APPR.	REFERENCE
REVISED		
ISSUED:		

RECOMMENDED: DEPUTY CHIEF ENGINEER

APPROVED: CHIEF TRANSPORTATION ENGINEER

STREETLIGHT TRANSFORMER BASE DETAILS

DISTRICT OF COLUMBIA
DEPARTMENT OF TRANSPORTATION

DWG. NO. 618.05

p:\4035\dc standard drawings\final\UNCHANGED\618-05.DGN
Friday, April 03, 2009 AT 12:22 PM

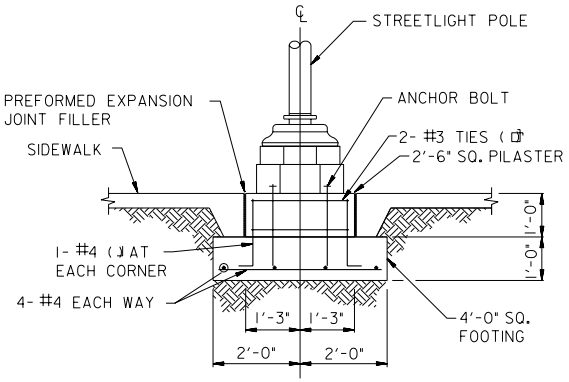

STREETLIGHT SPREAD FOOTING DETAIL I

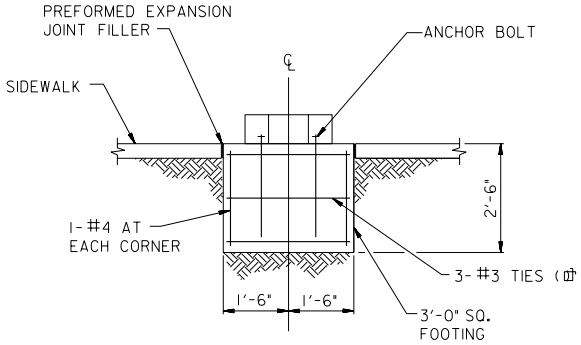

STREETLIGHT SPREAD FOOTING DETAIL II

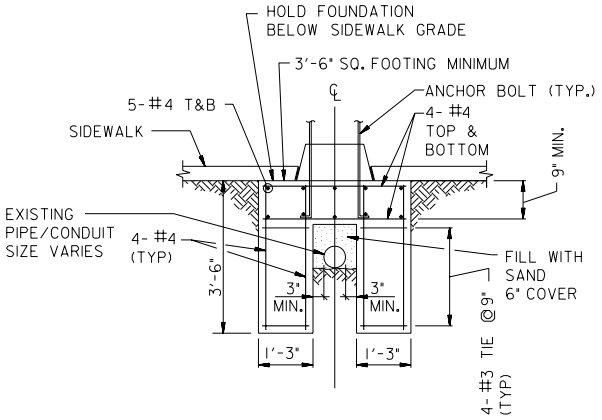

STREETLIGHT POLE SADDLE FOUNDATION

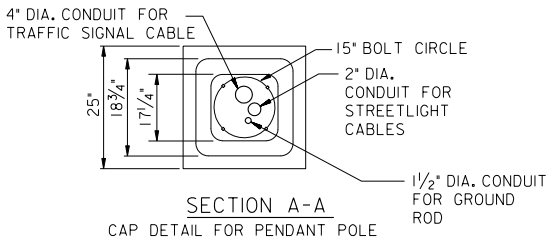

SECTION A-A

CAP DETAIL FOR PENDANT POLE WITH TRAFFIC SIGNALS

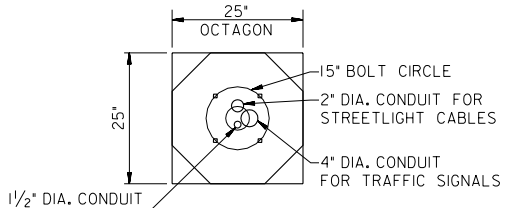

SECTION B-B

CAP DETAIL FOR TWIN 20 POLE WITH TRAFFIC SIGNALS

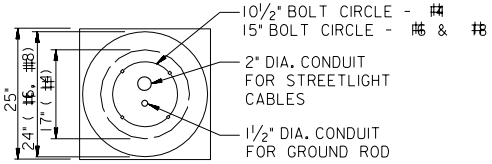

SECTION C-C

CAP DETAIL FOR #4, #6 AND #8 UPRIGHT POLES WITHOUT TRAFFIC SIGNALS

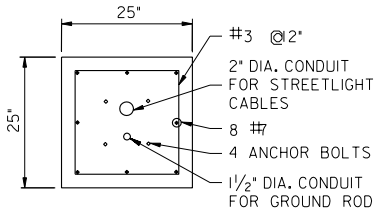

SECTION D-D

CONDUIT ARRANGEMENT FOR PENDANT POLE STREETLIGHT POLE WITHOUT TRAFFIC SIGNALS

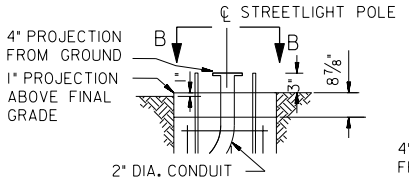

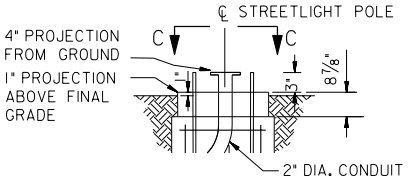

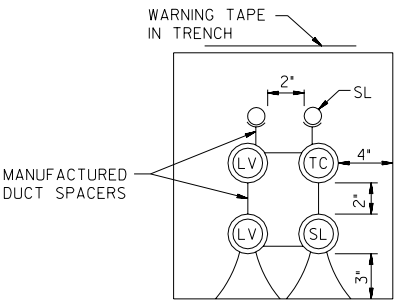

TYPICAL 6 DUCT BANK CONFIGURATION

SL - STREETLIGHTS
LV - LOW VOLTAGE
TC - TRAFFIC SIGNAL COMMUNICATION

DUCTBANK NOTES:

1. USE SPACERS FOR THE SPECIFIED CONDUIT SIZES.
2. SPACERS @5'-0" AND INSTALL WITHIN 1' OF COUPLING.

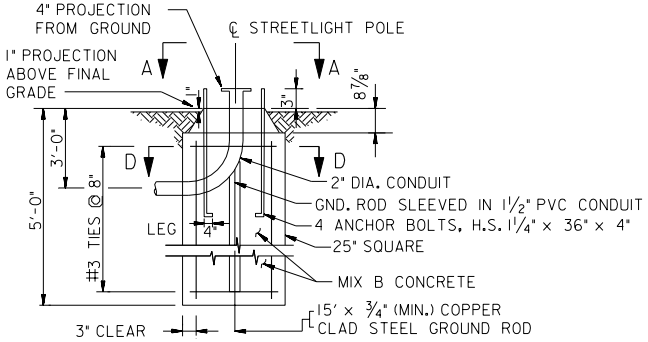

TYPICAL GROUND MOUNTED POLE FOUNDATION

NOTES:

1. SADDLE AND SPREAD FOOTING CONDUIT ENTRY SHALL BE DETERMINED BY FIELD CONDITIONS.
2. SEE DRAWINGS 618.01 TO 618.03 FOR STREETLIGHT POLE DETAILS.
3. FOR ELECTRICAL MANHOLE DETAILS, SEE DWG. NOS. 617.15 TO 617.19.

DATE	APPR.	REFERENCE
REVISED		
ISSUED:		

RECOMMENDED: DEPUTY CHIEF ENGINEER

APPROVED: CHIEF TRANSPORTATION ENGINEER

STREETLIGHT FOUNDATION TYPICAL CONDUIT CONFIGURATION DETAILS

DISTRICT OF COLUMBIA
DEPARTMENT OF TRANSPORTATION

DWG. NO. 618.06

p:\4035\dc standard drawings\final\UNCHANGED\618-06.DGN
Friday, April 03, 2009 AT 12:22 PM

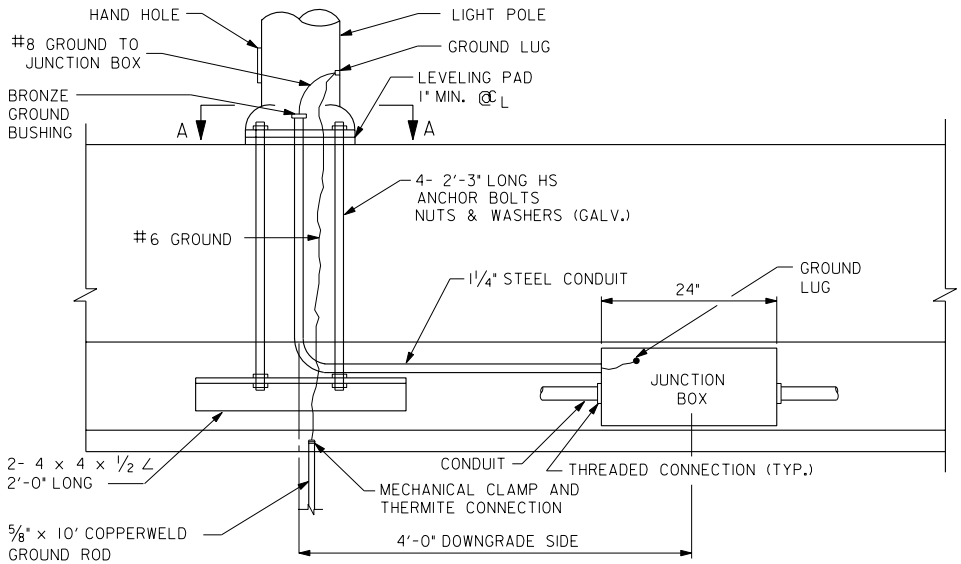

TYPICAL DETAILS OF LIGHT POLE INSTALLATION ON BARRIER

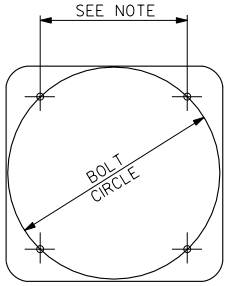

SECTION A-A

NOTE:

ANCHOR BOLT SIZE AND BOLT CIRCLE SHALL BE AS SHOWN ON PLANS OR AS SPECIFIED IN CONTRACT DOCUMENTS.

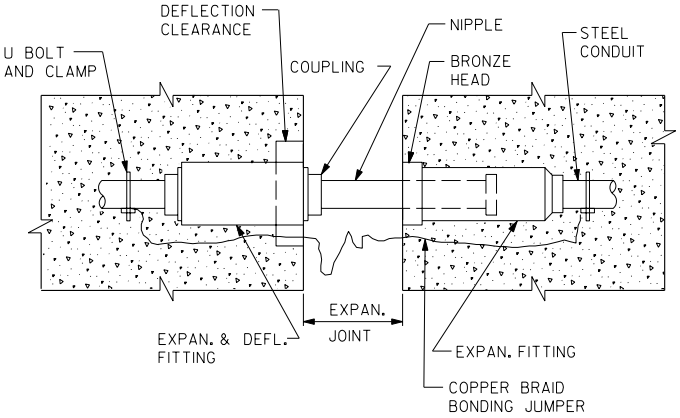

COMBINATION EXPANSION AND DEFLECTION FITTING

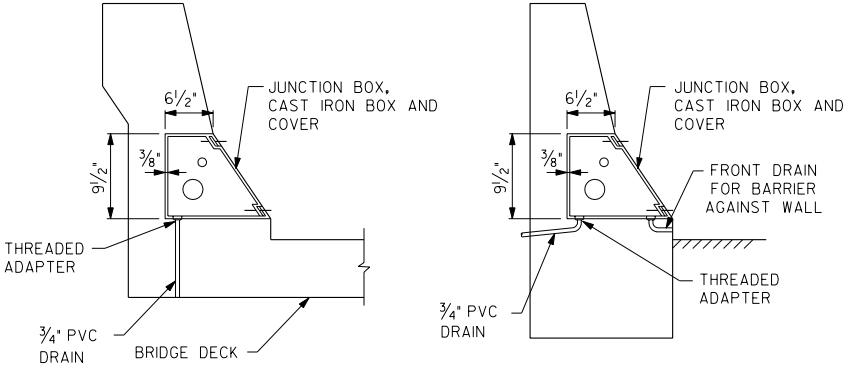

BARRIER JUNCTION BOX

NOTE:

1. FOR ELECTRICAL MANHOLE DETAILS, SEE DWG. NOS. 617.15 TO 617.19.

DATE	APPR.	REFERENCE
REVISED		
ISSUED:		

RECOMMENDED: DEPUTY CHIEF ENGINEER

APPROVED: CHIEF TRANSPORTATION ENGINEER

ELECTRICAL DETAILS

d. DISTRICT OF COLUMBIA
DEPARTMENT OF TRANSPORTATION

DWG. NO. 618.07

p:\4035\dc standard drawings\final\UNCHANGED\618-07.DGN
Friday, April 03, 2009 AT 12:22 PM

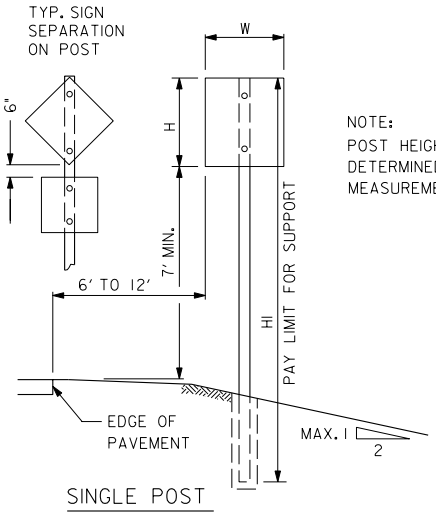

SINGLE POST

NOTE:
POST HEIGHTS SHALL BE DETERMINED BY FIELD MEASUREMENT.

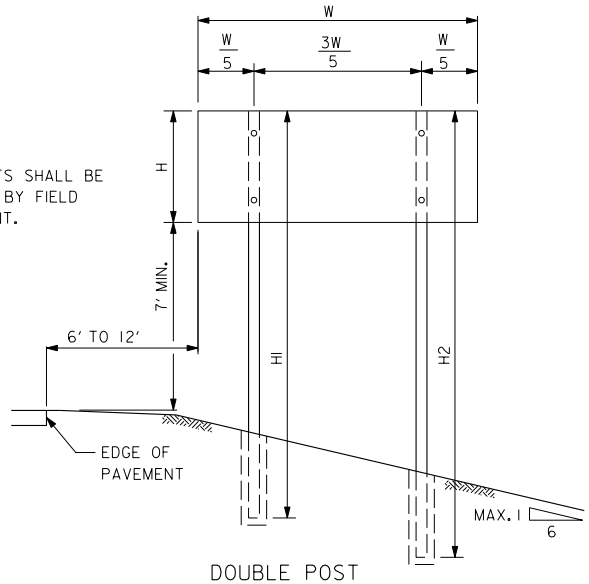

DOUBLE POST

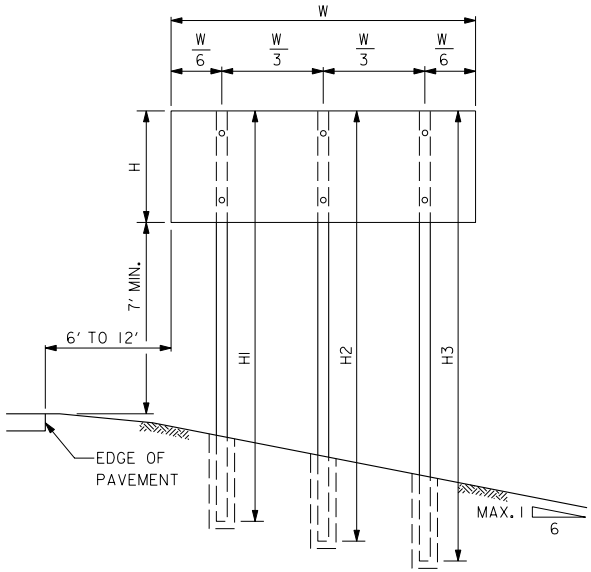

TRIPLE POST

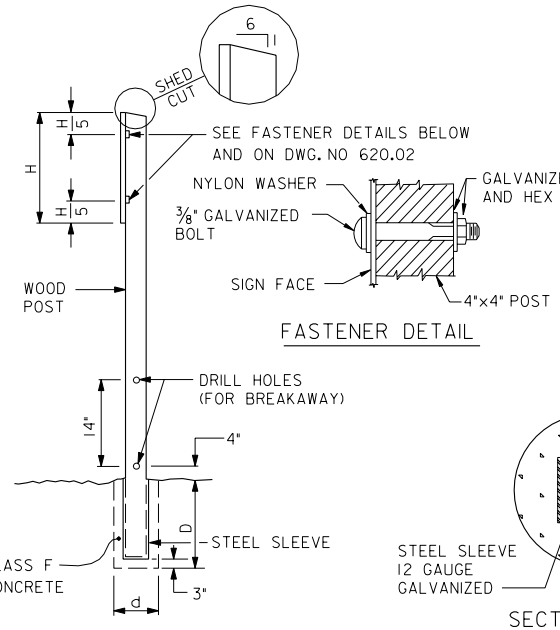

FASTENER DETAIL

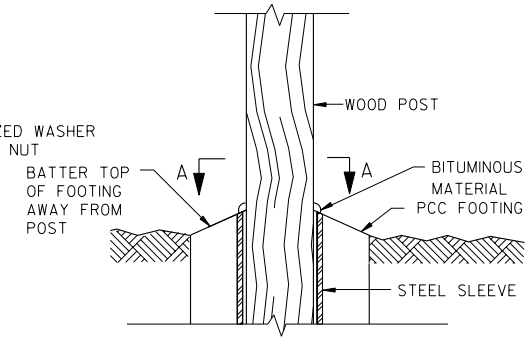

TYPICAL POST AND FOOTING

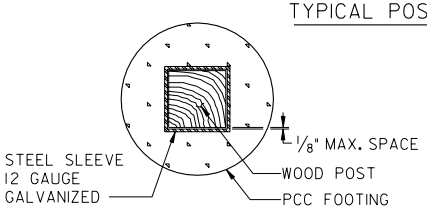

SECTION A-A

POST SIZE	d MIN.	D MIN.	MAXIMUM SIGN AREA (SQUARE FEET)			DIAM. OF DRILL HOLES INCHES
			SINGLE POST	DOUBLE POST	TRIPLE POST	
4 X 4	12"	3'	8 ▽	15	20	-
4 X 6	14"	4'	15 †	28	38	1½"
6 X 6	16"	4'	20 †	42	58	2"

▽ USE DOUBLE 4X4 POSTS IF W IS OVER 3'
† USE DOUBLE 4X6 POSTS IF W IS OVER 4'

NOTES:

1. LOCATION AND HEIGHTS SHALL BE IN ACCORDANCE WITH MANUAL ON UNIFORM TRAFFIC CONTROL DEVICES FOR STREETS AND HIGHWAYS, CURRENT EDITION.
2. BREAKAWAY IS REQUIRED FOR POSTS WITH CROSS SECTION 16 SQUARE INCHES OR LARGER. DRILL HOLES TO BE PERPENDICULAR TO PAVEMENT EDGE IN THE LARGEST FACE.
3. WOODEN SIGN SUPPORTS SHALL BE SOUTHERN PINE OR DOUGLAS FIR.
4. FOR USE IN SUITABLE SOIL ONLY.

DATE	APPR.	
REVISED		
ISSUED:		REFERENCE

RECOMMENDED: DEPUTY CHIEF ENGINEER

APPROVED: CHIEF TRANSPORTATION ENGINEER

PERMANENT BREAKAWAY WOOD SIGN POST SMALL SIGNS

d. DISTRICT OF COLUMBIA
DEPARTMENT OF TRANSPORTATION

DWG. NO. 620.01

p:\4035\dc standard drawings\final\UNCHANGED\620-01.DGN
Friday, April 03, 2009 AT 12:22 PM

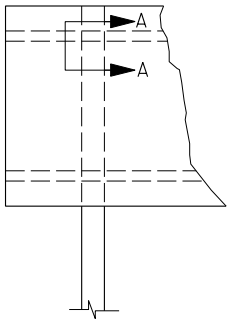

CONSTRUCTION SIGNS

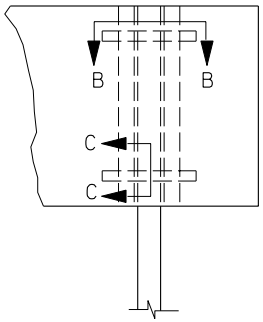

PERMANENT SIGNS

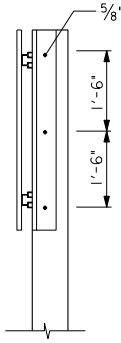

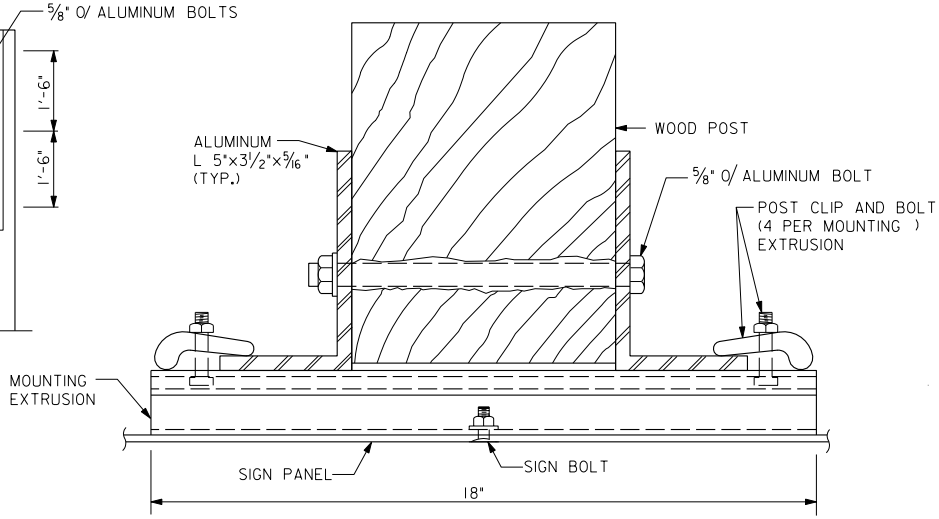

SECTION B-B

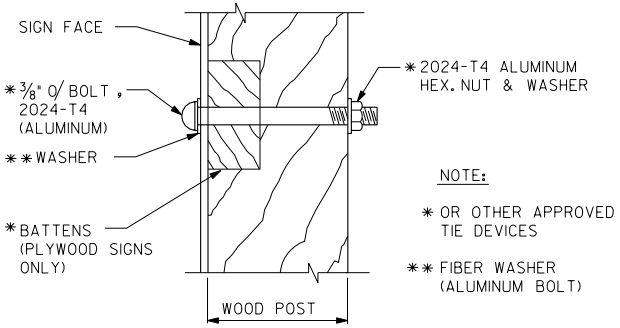

NOTE:

* OR OTHER APPROVED TIE DEVICES

** FIBER WASHER (ALUMINUM BOLT)

SECTION A-A
FASTENER DETAIL FOR
CONSTRUCTION SIGNS

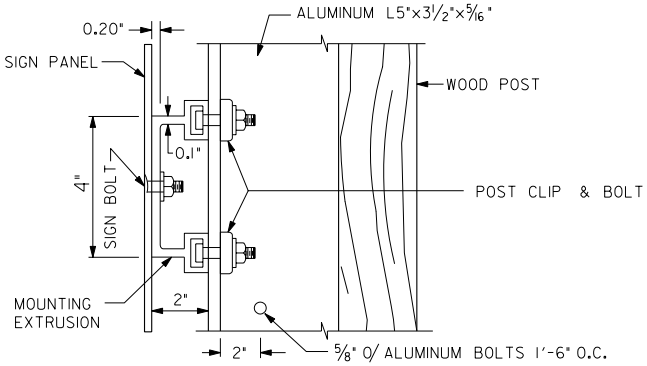

SECTION C-C
FASTENER DETAILS FOR
PERMANENT SIGNS

			RECOMMENDED: DEPUTY CHIEF ENGINEER
DATE	APPR.		APPROVED: CHIEF TRANSPORTATION ENGINEER
REVISED			
ISSUED:		REFERENCE	

SIGN FASTENER WOODEN POST DETAILS

d. DISTRICT OF COLUMBIA
DEPARTMENT OF TRANSPORTATION

DWG. NO. 620.02

p:\4035\dc standard drawings\final\UNCHANGED\620-02.DGN
Friday, April 03, 2009 AT 12:22 PM

DESIGN FACTORS:

1. WIND LOAD = 80 MPH.
2. POST STEEL IS AASHTO M183.
3. MAXIMUM L = 8 FEET.
4. POST SELECTION IS DERIVED FROM THE AASHTO STANDARD SPECIFICATIONS FOR STRUCTURAL SUPPORTS FOR HIGHWAY SIGNS, LUMINAIRES AND TRAFFIC SIGNALS, CURRENT EDITION.
5. FOR SIGNS LESS THAN 50 SQ. FEET, SEE DRAWING NO. 620.04 & 620.05.
6. FOR LARGER SIGNS, SEE DRAWING NO. 620.06.

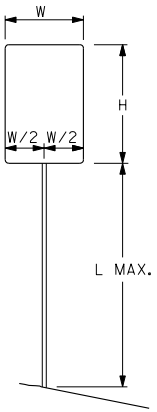

SIGN ON ONE POST

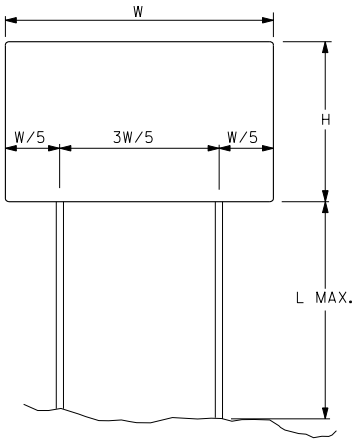

SIGN ON TWO POSTS

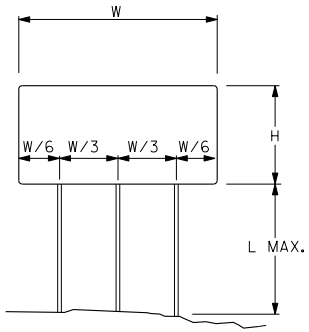

SIGN ON THREE POSTS

POST SELECTION CODE:

1	S3	x 5.7
2	S4	x 7.7
3	W6	x 9
4	W6	x 12
5	W6	x 15
6	W8	x 18
7	W8	x 21
8	W10	x 22
9	W12	x 26
10	W14	x 30

1 POST

H	W 2′	3′	4′	5′
2′	1	1	2	3
3′	1	2	3	-
4′	2	2	-	-
5′	3	3	-	-
6′	3	-	-	-
7′	-	-	-	-
8′	-	-	-	-
9′	-	-	-	-
10′	-	-	-	-
11′	-	-	-	-
12′	-	-	-	-
13′	-	-	-	-
14′	-	-	-	-
15′	-	-	-	-

2 POSTS

H	W 4′	5′	6′	7′	8′	10′	12′	14′	16′	18′	20′	22′	24′
2′	-	-	-	-	-	-	-	-	-	-	-	-	-
3′	-	1	1	1	1	1	-	-	-	-	-	-	-
4′	1	1	1	2	2	2	2	3	3	3	3	3	4
5′	1	1	2	2	2	2	3	3	3	4	4	4	4
6′	1	2	2	2	2	3	3	3	4	4	4	5	5
7′	1	2	2	3	3	3	4	4	4	5	5	5	6
8′	2	2	2	3	3	4	4	4	5	5	6	6	6
9′	2	3	3	3	3	4	4	5	5	6	6	6	7
10′	2	3	3	3	4	4	5	5	6	6	6	7	7
11′	2	3	3	3	4	5	5	6	6	7	7	8	8
12′	3	3	4	4	4	5	6	6	7	7	8	8	8
13′	-	-	4	4	5	5	6	6	7	8	8	9	9
14′	-	-	5	5	6	6	7	8	9	10	10	-	-
15′	-	-	5	6	6	7	8	9	10	-	-	-	-

3 POSTS

H	W 14′	16′	18′	20′	22′	24′	26′	28′	30′
2′	-	-	-	-	-	-	-	-	-
3′	-	-	-	-	-	-	-	-	-
4′	2	2	2	2	3	3	3	3	3
5′	2	3	3	3	3	3	3	4	4
6′	3	3	3	3	4	4	4	4	5
7′	3	3	4	4	4	4	5	5	5
8′	3	4	4	4	5	5	5	5	6
9′	4	4	5	5	5	5	6	6	6
10′	4	5	5	5	6	6	6	6	6
11′	5	5	5	6	6	6	6	7	7
12′	5	5	6	6	6	7	7	7	8
13′	5	6	6	6	7	7	8	8	8
14′	6	7	7	8	9	9	9	10	10
15′	6	8	8	9	9	10	10	-	-

DATE	APPR.	REFERENCE
REVISED		
ISSUED:		

RECOMMENDED: DEPUTY CHIEF ENGINEER

APPROVED: CHIEF TRANSPORTATION ENGINEER

METAL BREAKAWAY POSTS
POST SELECTION

DISTRICT OF COLUMBIA
DEPARTMENT OF TRANSPORTATION

DWG. NO. 620.03

p:\4035\dc standard drawings\final\UNCHANGED\620-03.DGN
Friday, April 03, 2009 AT 12:22 PM

NOTES:

1. FOR USE WITH SMALL SIGNS (LESS THAN 50 SQ. FEET).
2. THIS DESIGN IS CONSIDERED DIRECTIONAL.
3. IN CUT SLOPES THE MINIMUM CLEARANCE BETWEEN THE BOTTOM OF THE SIGN AND THE GROUND SHALL BE 7 FEET FOR ANY PORTION OF THE SIGN WITHIN THE CLEAR ZONE. THIS REQUIREMENT WILL NOT APPLY TO SIGNS OR PORTIONS OF SIGNS LOCATED MORE THAN 10 FEET UP A SLOPE GREATER THAN 3:1.
4. SIGNS SHALL BE LOCATED TO PROVIDE OPTIMUM VIEWING AND SAFETY WITHIN THE INDICATED LIMITS FOR LATERAL PLACEMENT.
5. WIND LOAD = 80 MPH.
6. METAL IS AASHTO M270 GRADE 36.
7. SLIP BASE DESIGN DOES NOT REQUIRE A HINGE IN POST.
8. BREAKAWAY DEVICES SHALL BE NCHRP REPORT 350, TL-3 CERTIFIED.

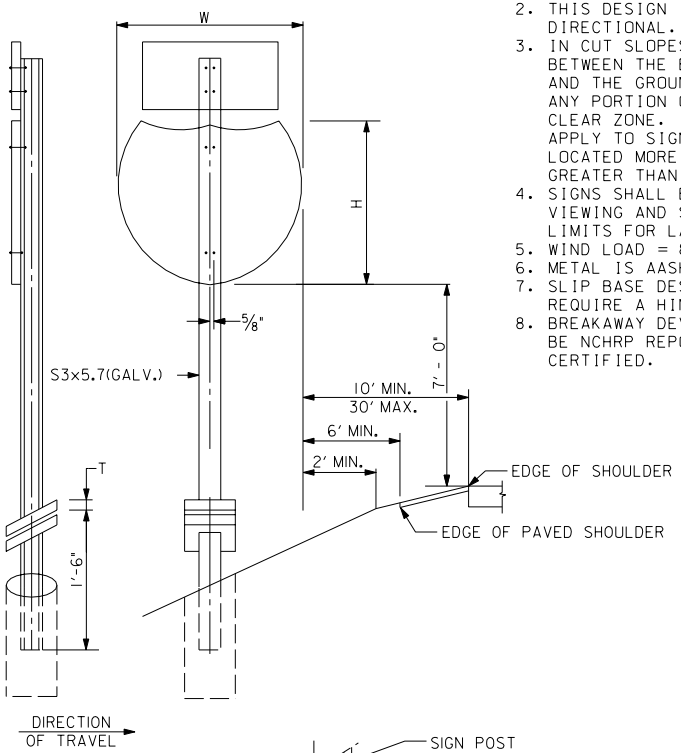

TYPE ONE

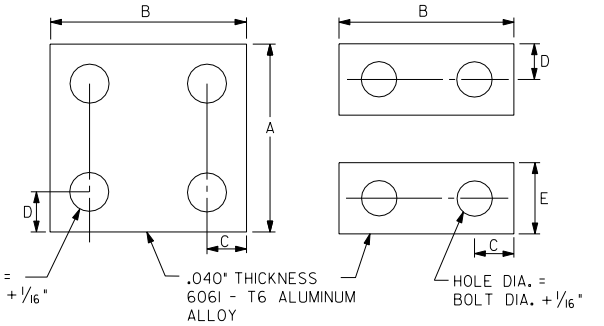

BOLT KEEPER PLATE

ALT. BOLT KEEPER PLATE

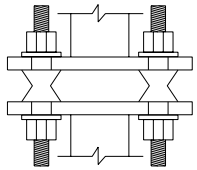

ALTERNATE TO KEEPER PLATE

4 - 5/8" BREAKAWAY BOLTS

BOLT KEEPER PLATE DATA

POST SHAPE	A	B	C	D	E	T
S3x5.7	3"	6 1/2"	1/2"	1/2"	1"	5/8"
S4x7.7	3"	7 1/2"	3/4"	3/4"	1 1/2"	5/8"
W6x12	7"	7 1/2"	3/4"	3/4"	1 1/2"	3/4"

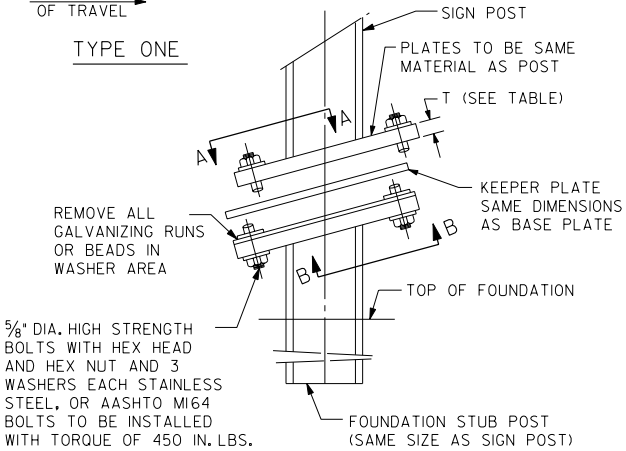

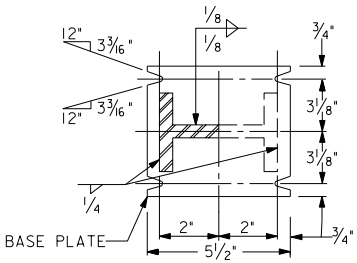

SECTION A-A\SECTION B-B

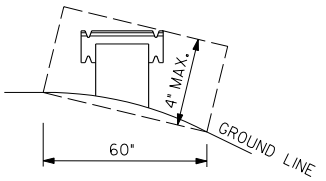

MAX. PROJECTION OF STUB POST

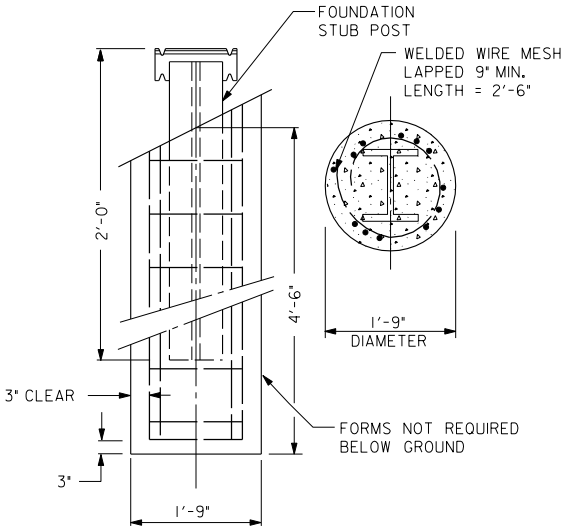

FOUNDATION

DATE	APPR.	
REVISED		
ISSUED:		
		REFERENCE

RECOMMENDED: DEPUTY CHIEF ENGINEER

APPROVED: CHIEF TRANSPORTATION ENGINEER

METAL BREAKAWAY POSTS SMALL SIGNS DETAIL - 1

DISTRICT OF COLUMBIA
DEPARTMENT OF TRANSPORTATION

DWG. NO. 620.04

p:\4035\dc standard drawings\final\UNCHANGED\620-04.DGN
Friday, April 03, 2009 AT 12:22 PM

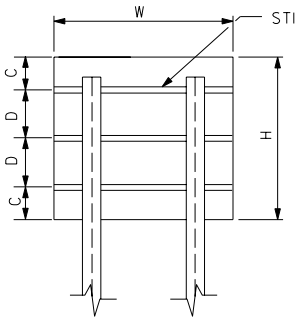

TYPE TWO

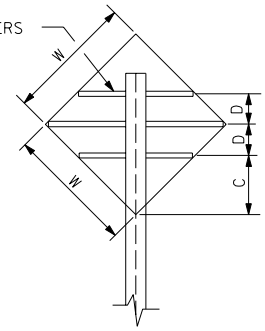

TYPE THREE

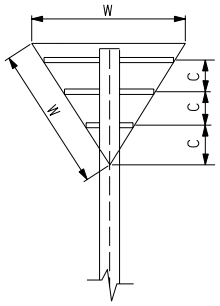

TYPE FOUR

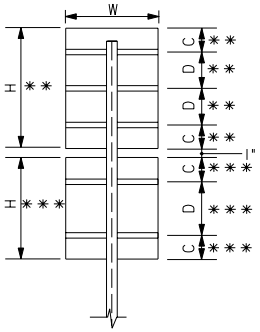

TYPE FIVE

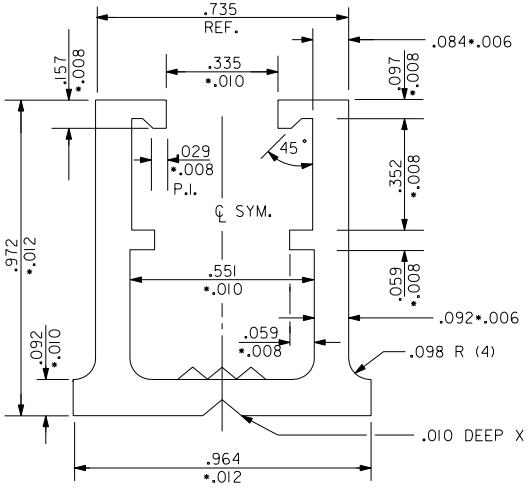

NOTE:

DIMENSIONS ARE IN INCHES.

MEDIUM STIFFENER SECTION

STRUCTURE TYPE	W	H	C	D	STIFFENERS	
					NO.	SIZE
TWO	4′	4′	6"	3′-0"	2	MEDIUM
TWO	4′	5′	12"	1′-6"	3	MEDIUM
TWO	5′	3′	7"	1′-10"	2	MEDIUM
TWO	6′	5′	4"	1′-1"	5	MEDIUM
TWO	6′	6′	3.5"	1′-1"	6	MEDIUM
TWO	5′	5′	8"	1′-10"	3	MEDIUM
THREE	4′	—	8"	2′-2"	3	MEDIUM
FOUR	5′	—	1′-4"	—	3	MEDIUM
FIVE	4′	5′ **	12" **	1′-6" **	3**	MEDIUM
	4′	4′***	6"***	3′-0"***	2***	MEDIUM

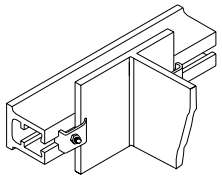

STIFFENER TO POST ATTACHMENT DETAIL

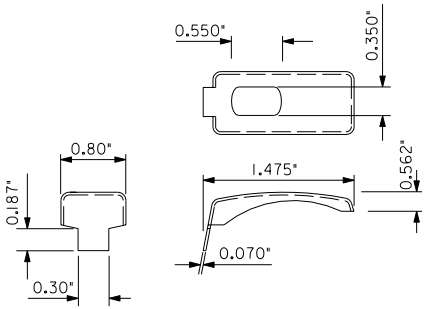

POST CLAMP (STAINLESS STEEL)

POST CLAMP BOLT (STAINLESS STEEL)

NOTES:

1. ALL POST LENGTHS SHALL BE FIELD DETERMINED BY CONTRACTOR PRIOR TO FABRICATION.
2. FOR ADDITIONAL INFORMATION, SEE DWG. NO. 620.04.
3. USE OF STIFFENERS IS NOT REQUIRED ON SIGN SIZES OF 16 SQUARE FEET OR SMALLER.

DATE	APPR.	
REVISED		
ISSUED:		
		REFERENCE

RECOMMENDED: DEPUTY CHIEF ENGINEER

APPROVED: CHIEF TRANSPORTATION ENGINEER

METAL BREAKAWAY POSTS SMALL SIGNS DETAIL - 2

DISTRICT OF COLUMBIA
DEPARTMENT OF TRANSPORTATION

DWG. NO. 620.05

p:\4035\dc standard drawings\final\UNCHANGED\620-05.DGN
Friday, April 03, 2009 AT 12:22 PM

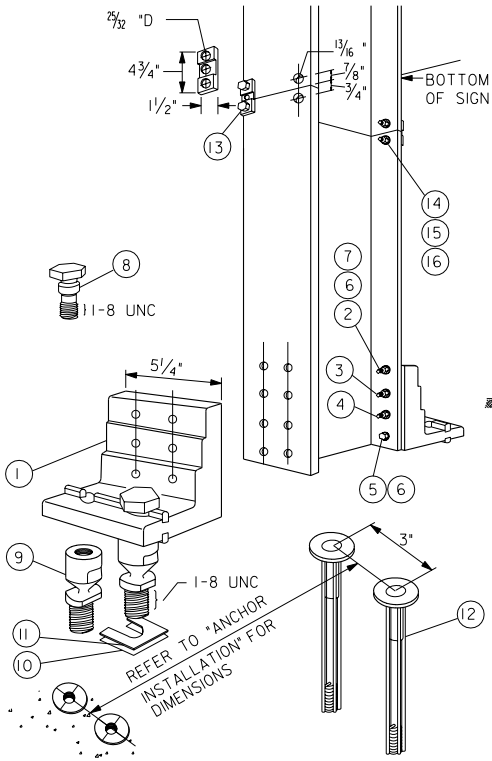

TYPICAL DESIGN FOR 6" AND 8" WF POSTS

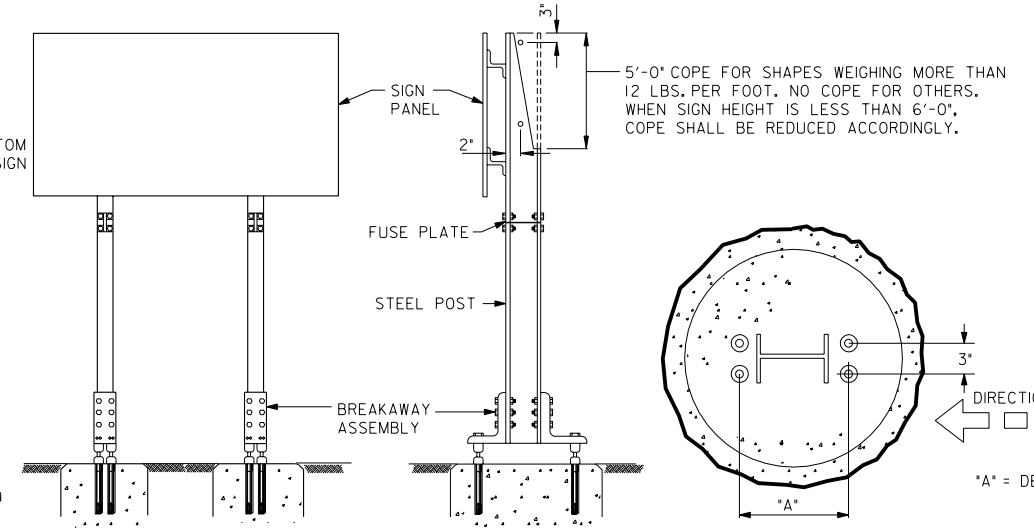

SCHEMATIC

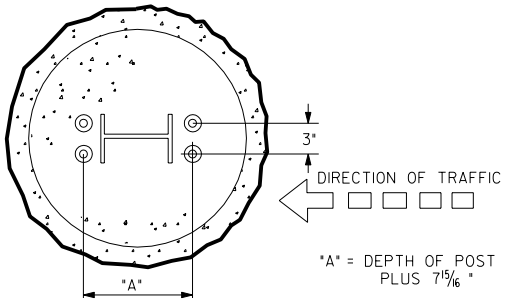

PLAN VIEW OF FOOTING

ANCHOR INSTALLATION

NOTES:

1. SUPPORT SYSTEM WHEN TWO OR MORE WF POSTS ARE UTILIZED.
2. LENGTH OF UPPER AND LOWER POST TO BE DETERMINED BY DESIGNER.
3. REFERENCE: AASHTO STANDARD SPECIFICATIONS FOR STRUCTURAL SUPPORTS FOR HIGHWAY SIGNS, LUMINARIES AND TRAFFIC SIGNALS, CURRENT EDITION. BREAKAWAY DEVICES SHALL BE NCHRP REPORT 350, TL-3 CERTIFIED.
4. FOUNDATION DESIGN NOT SHOWN.
5. HINGE DESIGN TO BE INCORPORATED ON ALL LARGE GROUND MOUNT SIGNS (SIGN AREA GREATER THAN 50 SQUARE FEET).

MATERIAL IDENTIFICATION

ITEM		DESCRIPTION
1	BRACKET	6061 T6 ALUMINUM
2	BOLT	TOP 1/2"-13 UNC×2 1/2" HEX HD. AASHTO M164-03 GALV. AASHTO M232-M/M
3	BOLT	MIDDLE 1/2"-13 UNC×2 3/4" HEX HD. AASHTO M164-03 GALV. AASHTO M232-M/M
4	BOLT	BOTTOM 1/2"-13 UNC×3" HEX HD. AASHTO M164-03 GALV. AASHTO M232-M/M
5	CAP SCREW	BRACKET 1/2"-13 UNC×1 1/4" HEX HD. ASTM A307 GALV. AASHTO M232-M/M
6	LOCKWASHER	1/2" ANSI18-21-1 GALV. AASHTO 232-M/M
7	NUT	1/2" 13UNC HEAVY HEX. AASHTO M291 GR. DH. GALV. AASHTO 232-M/M
8	SPECIAL BOLT	1"-8 UNC AASHTO M164-03 GALV. AASHTO M298, M232-M/M
9	COUPLING	1"-8 UNC LP AMS6378D, GALV. AASHTO M298, M232-M/M
10	SHIM	1" HORSESHOE 18 GAUGE GALV. STEEL SHEET
11	SHIM	1" HORSESHOE 14 GAUGE GALV. STEEL SHEET
12	ANCHOR	1"-8 UNC 304 STAINLESS STEEL FERRULE ANSI1038 ROD & ANSI1008 COIL
13	HINGE PLATE	TYPE B525 ANSI 4130, GALV. AASHTO M111
14	BOLT	HINGE 3/4"-10 UNC×2 1/4" HEX HD. AASHTO M164-03 GALV. AASHTO M232-M/M
15	LOCKWASHER	3/4" ANSI18-21-1 GALV. AASHTO M232-M/M
16	NUT	3/4"-10 UNC HEAVY HEX. AASHTO M291 GR. DH. GALV. AASHTO M232-M/M

DATE	APPR.	
REVISED		
ISSUED:		
		REFERENCE

RECOMMENDED: DEPUTY CHIEF ENGINEER

APPROVED: CHIEF TRANSPORTATION ENGINEER

METAL BREAKAWAY POST SYSTEM LARGE SIGNS

DISTRICT OF COLUMBIA
DEPARTMENT OF TRANSPORTATION

DWG. NO. 620.06

p:\4035\dc standard drawings\final\UNCHANGED\620-06.DGN
Friday, April 03, 2009 AT 12:22 PM

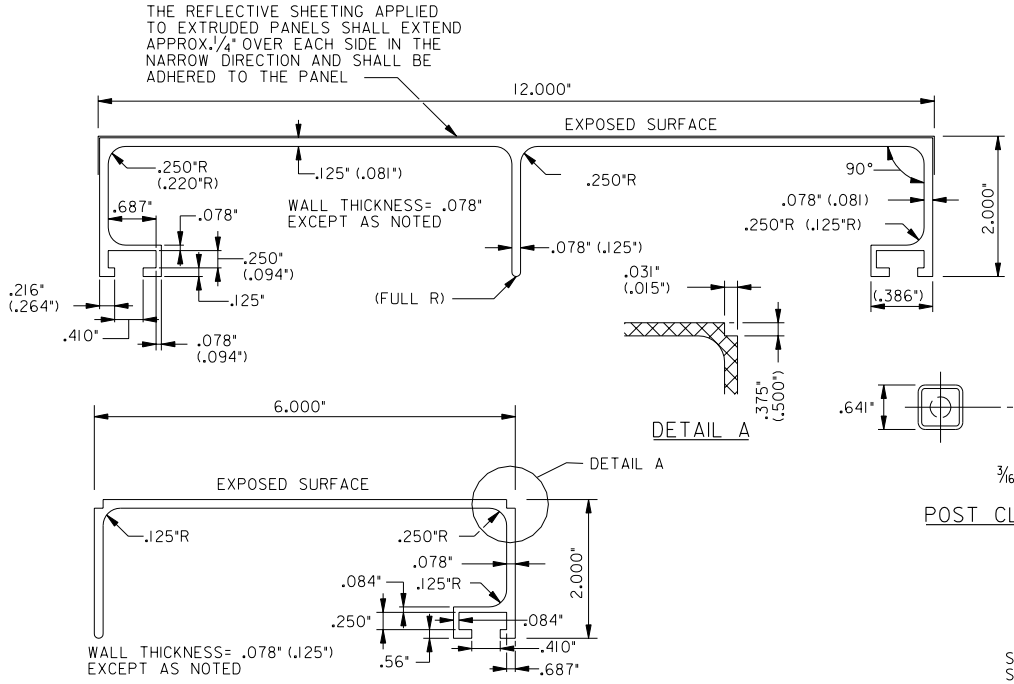

NOTES:

1. ALUMINUM PANELS MAY HAVE SQUARE CORNERS OR NOTCHED CORNERS AS SHOWN. NO OTHER TYPE CORNERS ARE ACCEPTABLE.

2. ALTERNATE DIMENSIONS INDICATED IN PARENTHESES ARE ACCEPTABLE.

SIGN PANEL DETAILS

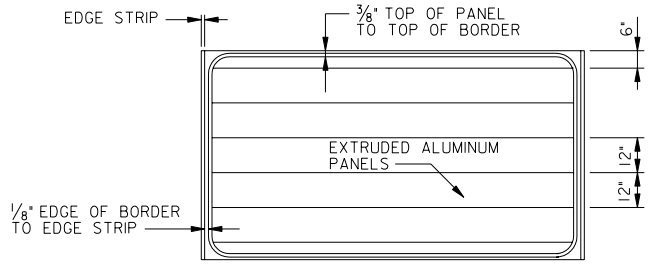

BORDER DETAIL

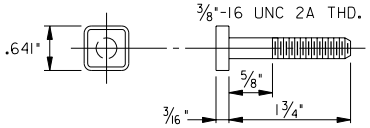

POST CLIP BOLT (TYP.)

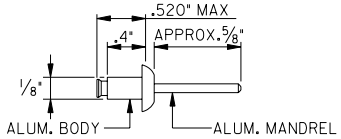

DETAIL OF A BLIND RIVET FOR CUTOUT LETTER (TYP.)

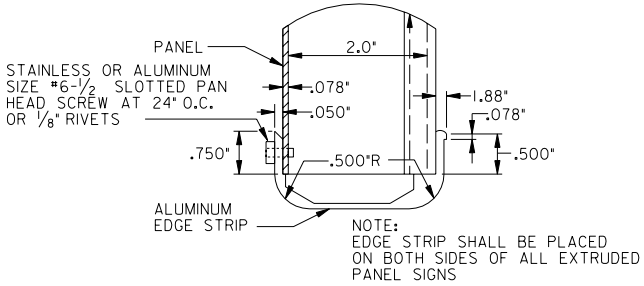

DETAIL OF EDGE STRIP

DATE	APPR.	REFERENCE
REVISED		
ISSUED:		

RECOMMENDED: DEPUTY CHIEF ENGINEER

APPROVED: CHIEF TRANSPORTATION ENGINEER

EXTRUDED ALUMINUM DETAILS

d. DISTRICT OF COLUMBIA
DEPARTMENT OF TRANSPORTATION

DWG. NO. 620.07

p:\4035\dc standard drawings\final\UNCHANGED\620-07.DGN
Friday, April 03, 2009 AT 12:22 PM

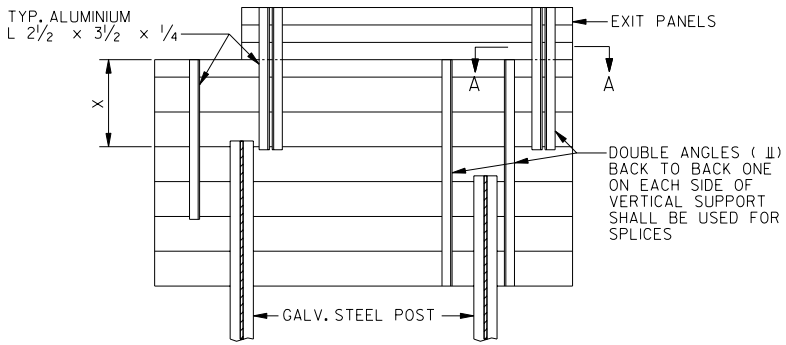

VERTICAL SUPPORT SPLICE DETAIL

APPLICABLE ONLY TO MODIFICATIONS OF EXISTING SIGNS, NOT NEW CONSTRUCTION. SEE NOTE 2.

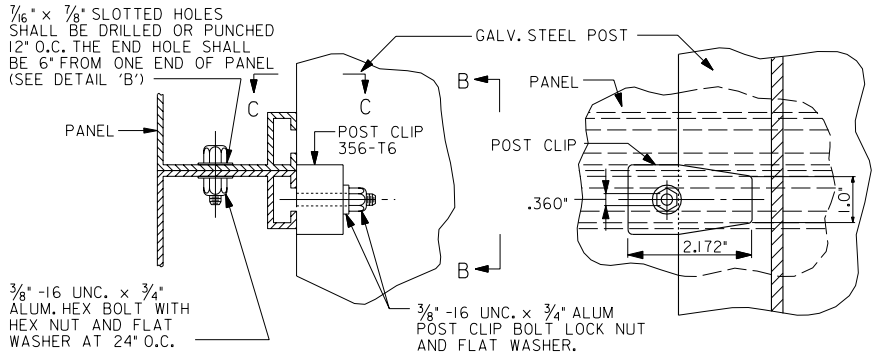

SECTION A-A

SECTION B-B

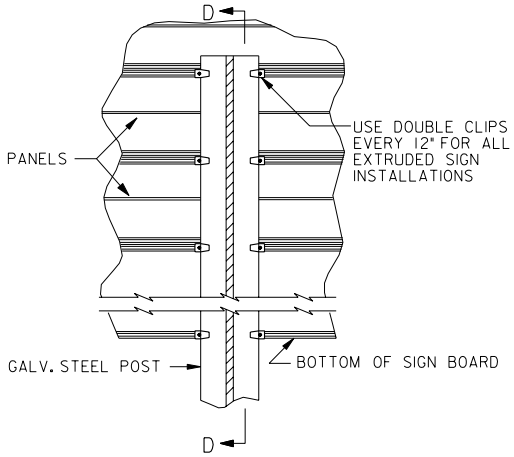

NOTES:

1. FOR NEW CONSTRUCTION, VERTICAL SUPPORTS ARE TO BE CONTINUOUS TO ENTIRE HEIGHT OF SIGN.
2. ON MODIFICATIONS, NON-CONTINUOUS SUPPORTS WILL BE PERMITTED. SPLICED DOUBLE ANGLES SHALL EXTEND A MIN. DISTANCE OF 'X' NOTED ABOVE. SPLICED SECTIONS 'X' OF 6'-0" OR MORE SHALL HAVE A W6X9 OR EQ. SECTION ATTACHED TO FULL HEIGHT OF SIGN.
3. ALL SUPPORTS SHALL BE POST CLIPPED AT 12" INTERVALS. THE BOTTOM PART OF THE SPLICED SUPPORT SECTIONS SHALL BE ATTACHED WITH AT LEAST TWO POST CLIPS.

VERTICAL SUPPORT ATTACHMENT DETAILS

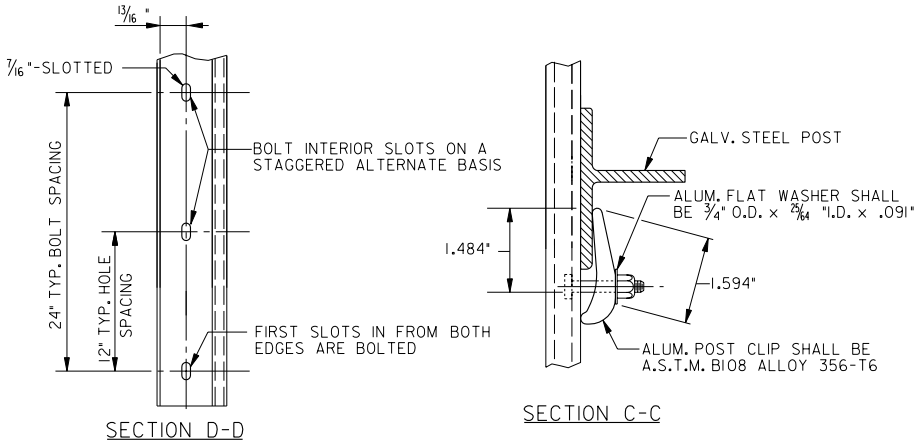

SECTION D-D

SECTION C-C

DETAILS OF ASSEMBLING SIGN PANELS

DATE	APPR.	
REVISED		
ISSUED:		
		REFERENCE

RECOMMENDED: DEPUTY CHIEF ENGINEER

APPROVED: CHIEF TRANSPORTATION ENGINEER

EXTRUDED ALUMINUM DETAILS AND SIGN PANEL ASSEMBLY - 1

d. DISTRICT OF COLUMBIA
DEPARTMENT OF TRANSPORTATION

DWG. NO. 620.08

p:\4035\dc standard drawings\final\UNCHANGED\620-08.DGN
Friday, April 03, 2009 AT 12:22 PM

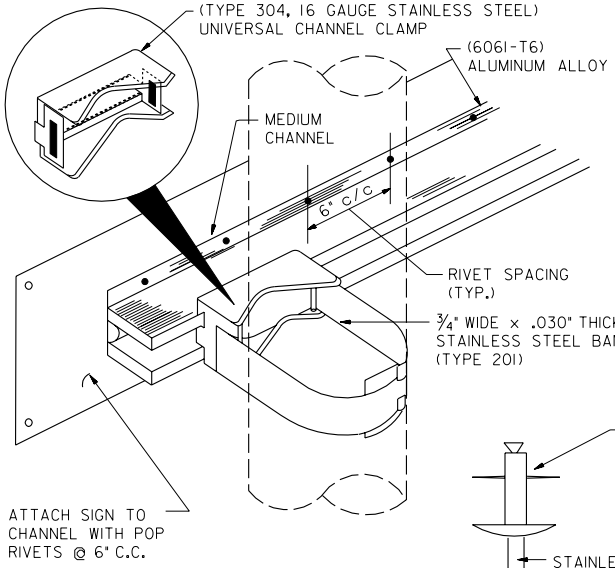

UNIVERSAL CHANNEL CLAMP

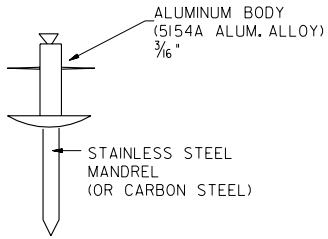

POP RIVET

SIGN ATTACHMENT DETAIL
VERTICAL POLE INSTALLATION ONLY
(MAX. SIGN WIDTH 5'-0")

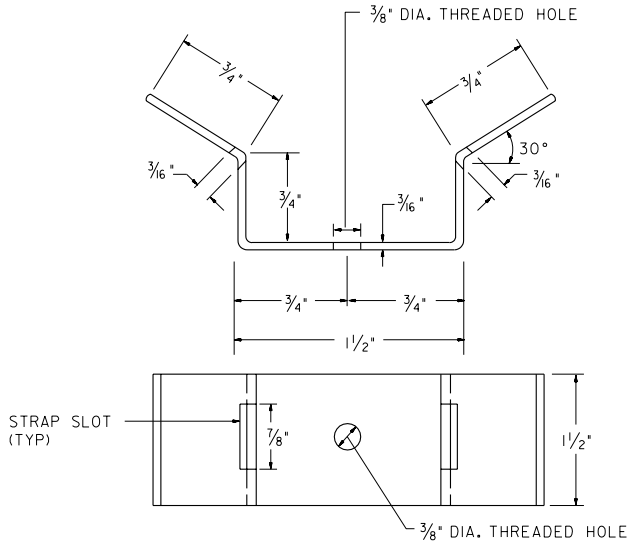

NOTES:

1. FOR SHEET ALUMINUM SIGNS 30" AND LESS IN WIDTH, STAINLESS STEEL BANDING WITH SADDLE BRACKETS CAN BE USED TO ATTACH SIGNS. NO HORIZONTAL BRACING CHANNELS ARE REQUIRED.
2. MAX SPACING OF BANDING STRAPS SHALL BE 12" CENTER-TO-CENTER.

DETAIL A (SADDLE BRACKET)

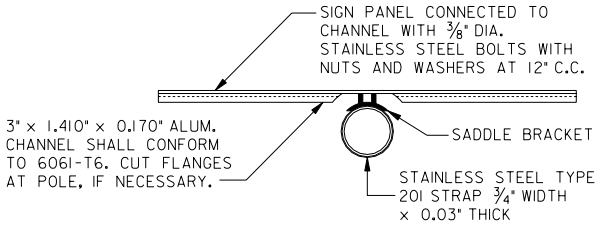

SIGN ATTACHMENT DETAILS (PLAN VIEW)

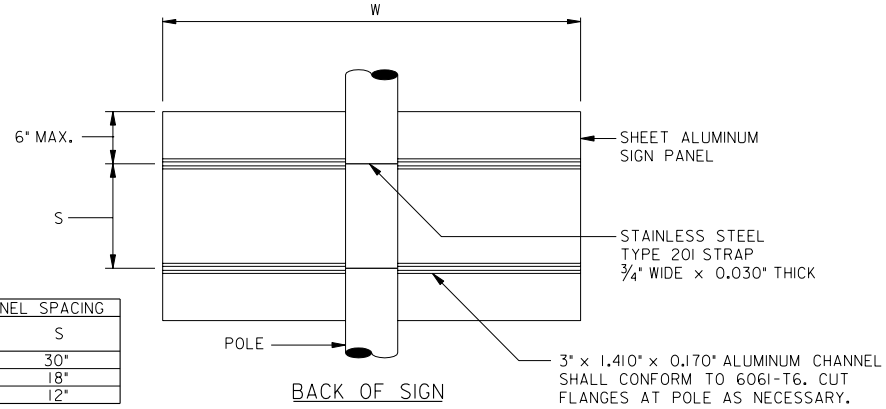

CHANNEL SPACING	
W	S
36"	30"
48"	18"
60"	12"

BACK OF SIGN

DATE	APPR.	
REVISED		
ISSUED:		
		REFERENCE

RECOMMENDED: DEPUTY CHIEF ENGINEER

APPROVED: CHIEF TRANSPORTATION ENGINEER

EXTRUDED ALUMINUM DETAILS AND SIGN PANEL ASSEMBLY - 2

d. DISTRICT OF COLUMBIA
DEPARTMENT OF TRANSPORTATION

DWG. NO. 620.09

p:\4035\dc standard drawings\final\UNCHANGED\620-09.DGN
Friday, April 03, 2009 AT 12:22 PM

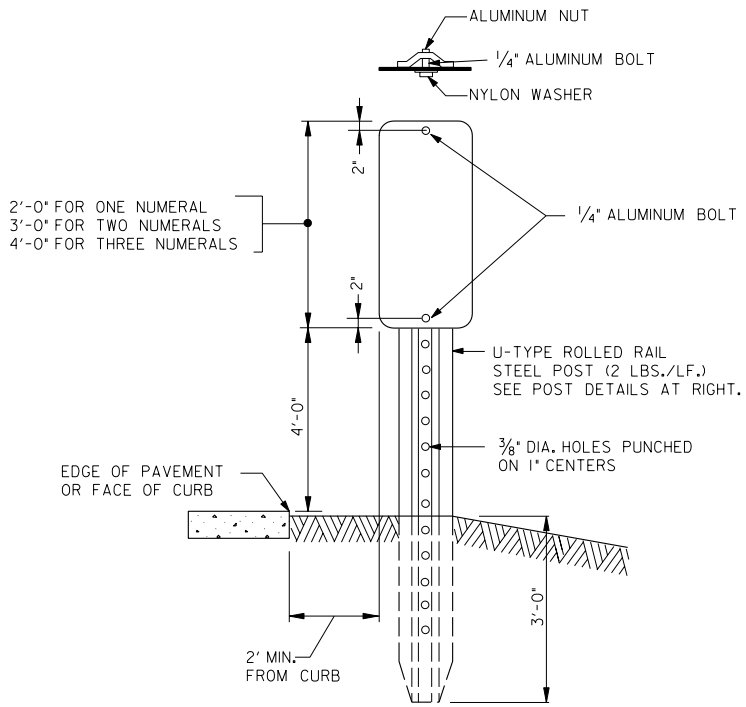

MOUNTING DETAIL

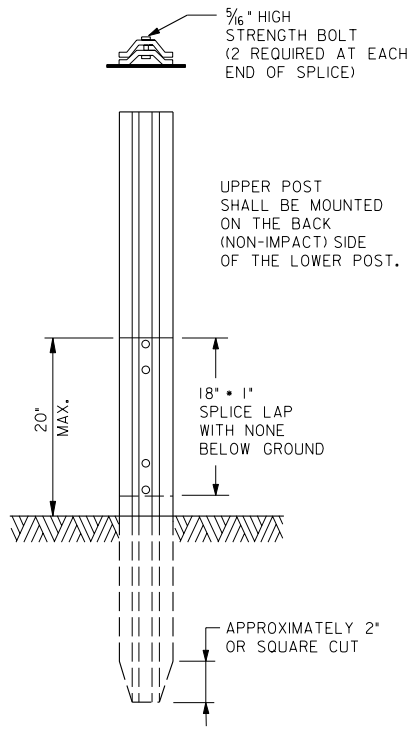

SPLICING DETAIL

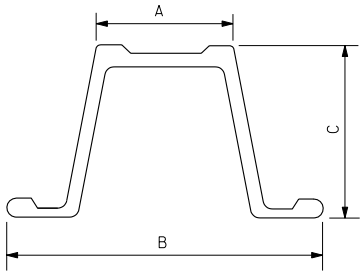

1.33 LB./LF.

	MIN.	MAX.
A.	1/2"	1"
B.	2"	2 1/4"
C.	3/4"	1 1/4"

2.00 LB./LF.

	MIN.	MAX.
A.	1 13/64"	1 9/32"
B.	3 1/16"	3 1/8"
C.	1 27/64"	1 33/64"

3.00 LB./LF.

	MIN.	MAX.
A.	1 17/64"	1 5/8"
B.	3 3/16"	3 1/2"
C.	1 1/2"	1 7/8"

LENGTH IS VARIABLE.
WEIGHT IS PER LINEAR FOOT.

POST SECTION DIMENSIONS

NOTES:

1. DRIVING CAP TO BE USED WHEN DRIVING POST.
2. PANEL TO BE FABRICATED OF ASTM B209 ALLOY 6061-T6 OR 5052-H38, 0.080" THICK, AND TYPE III SHEETING.
3. REFERENCE LOCATION SIGNS SHALL MEET THE REQUIRMENTS OF MUTCD SECTION 2D.45.
4. TOP OF PANEL TO BE FLUSH WITH TOP OF POST.
5. TO BE USED IN "STRONG SOIL" ONLY.
6. REFERENCE LOCATION MARKER TO BE LOCATED IN LINE WITH DELINEATOR POSTS, EDGE OF SHOULDER OR BACK OF GUARDRAIL, IF PRESENT.

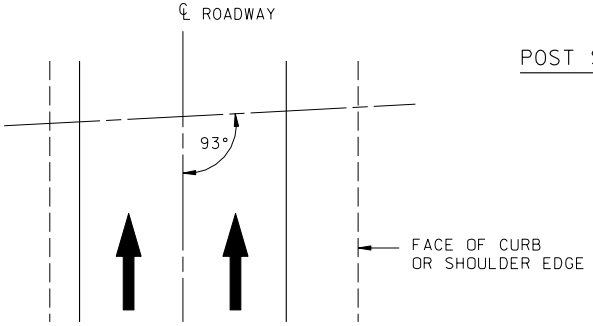

TYPICAL SIGN INSTALLATION ON SHOULDER

DATE	APPR.	
REVISED		
ISSUED:		
		REFERENCE

RECOMMENDED: DEPUTY CHIEF ENGINEER

APPROVED: CHIEF TRANSPORTATION ENGINEER

REFERENCE LOCATION SIGN AND POST DETAILS

DISTRICT OF COLUMBIA
DEPARTMENT OF TRANSPORTATION

DWG. NO. 620.10

p:\4035\dc standard drawings\final\UNCHANGED\620-10.DGN
Friday, April 03, 2009 AT 1:22 PM

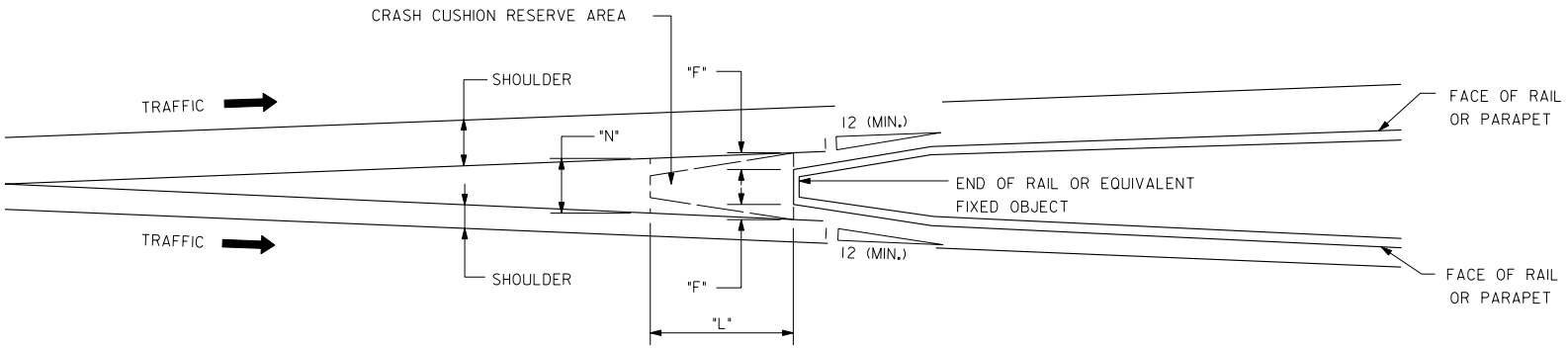

DESIGN SPEED ON MAINLINE (M.P.H.)	DIMENSIONS FOR CRASH CUSHION RESERVE AREA (FEET)								
	MINIMUM						PREFERRED		
	RESTRICTED CONDITIONS			UNRESTRICTED CONDITIONS					
	"N"	"L"	"F"	"N"	"L"	"F"	"N"	"L"	"F"
30	6	8	2	8	11	3	12	17	4
50	6	17	2	8	25	3	12	33	4
70	6	28	2	8	45	3	12	55	4

NOTES:

1. NO CURBS, RAISED PAVEMENT OR PROWS ARE TO BE BUILT OR REMAIN IN THE AREA SURROUNDING OR OCCUPIED BY THE CRASH CUSHION.
2. A CRASH CUSHION SHALL BE INSTALLED ONLY IF IT REDUCES THE SEVERITY OF POTENTIAL ACCIDENTS, AND THE RIGID OBJECT OR HAZARDOUS CONDTION CANNOT BE REMOVED, RELOCATED OR MADE BREAKAWAY.
3. RESERVE AREA DIMENSIONS WILL DETERMINE THE TYPE OF CRASH CUSHION BASED ON MANUFACTURER'S DESIGN.

p:\4035\dc standard drawings\final\UNCHANGED\627-01.DGN
Friday, April 03, 2009 AT 12:22 PM

DATE	APPR.	
REVISED		
ISSUED:		
		REFERENCE

RECOMMENDED: DEPUTY CHIEF ENGINEER

APPROVED: CHIEF TRANSPORTATION ENGINEER

CRASH CUSHION RESERVE AREA

d. DISTRICT OF COLUMBIA
DEPARTMENT OF TRANSPORTATION

DWG. NO. 627.01

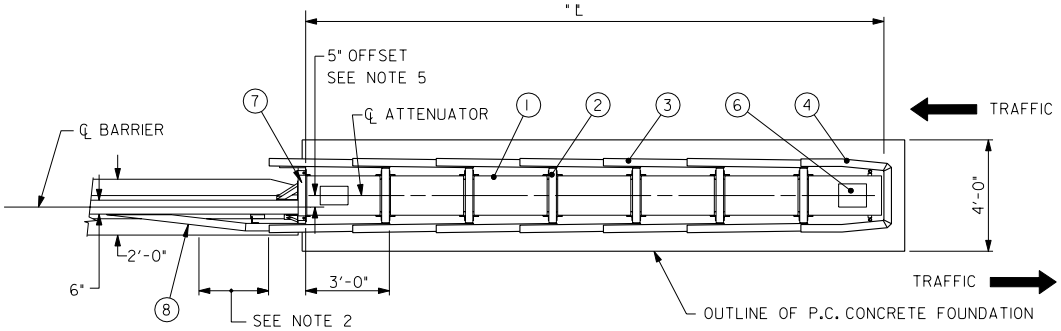

PLAN
(6 BAY UNIT SHOWN)

TYPICAL CRASH CUSHION SIZE FOR DESIGN SPEED

ATTENUATOR LENGTH "L"	NO. OF BAYS	SPEED (MPH)
11'-9"	3	40 OR LESS
14'-9"	4	45
17'-9"	5	50
20'-9"	6	55
23'-9"	7	60
26'-9"	8	65

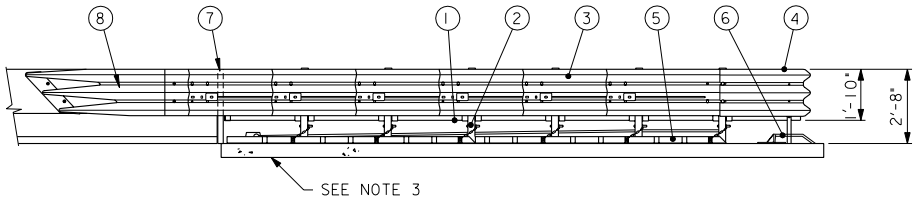

ELEVATION
LEFT SIDE

KEY

1. CRUSHABLE CARTRIDGE
2. DIAPHRAGM
3. FENDER PANEL
4. NOSE COVER
5. MONORAIL OR DOUBLE RAIL
6. ANCHOR BASE
7. RIGID BACK UP (FURNISHED W/SYSTEM)
8. TRANSITION PANEL (FURNISHED W/SYSTEM)

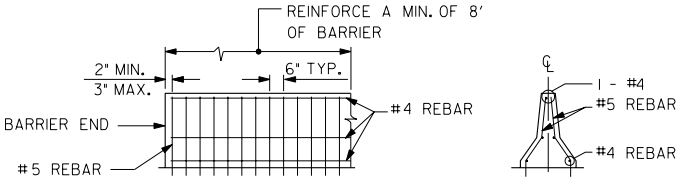

MINIMUM RECOMMENDED
REINFORCEMENT DETAIL

NOTES:

1. REMOVE ALL CURBS AND ISLANDS FOR PROPER IMPACT PERFORMANCE.
2. PROVISION SHALL BE MADE FOR REAR FENDER PANELS CLEARANCE TO SLIDE REARWARD UPON IMPACT.
3. 6" MIN. REINFORCED CLASS E PCC FOUNDATION OR 8" MIN. NONREINFORCED CLASS E PCC ROADWAY, OR AS SPECIFIED BY THE MANUFACTURER OF THE APPROVED SYSTEM.
4. CAUTION: ℄ OF CRASH CUSHION SHALL BE PARALLEL WITH ℄ OF BARRIER ±1°.
5. 5" OFFSET IS BASED ON USING CONCRETE BARRIER (CB) WITH A 6" TOP. ANY VARIANCE FROM THIS MUST BE COMPENSATED BY CHANGING THE OFFSET BETWEEN THE UNIT ℄ AND THE CONCRETE BARRIER ℄. OFFSET = 8" - $\frac{\text{(WIDTH OF CB TOP)}}{2}$
6. CONTRACTOR SHALL SUBMIT SHOP DRAWINGS FOR APPROVAL OF SELECTED CRASH CUSHION SYSTEM, AND NCHRP REPORT 350, TL-2 OR TL-3 CERTIFICATION.

DATE	APPR.	REFERENCE
REVISED		
ISSUED:		

RECOMMENDED: DEPUTY CHIEF ENGINEER

APPROVED: CHIEF TRANSPORTATION ENGINEER

TYPICAL CRASH CUSHION SYSTEM WITH NEW JERSEY OR F SHAPE ATTACHED BACKUP AND LEFT SIDE 5" OFFSET TRANSITION PANEL

d. DISTRICT OF COLUMBIA
DEPARTMENT OF TRANSPORTATION

DWG. NO. 627.02

p:\4035\dc standard drawings\final\UNCHANGED\627-02.DGN
Friday, April 03, 2009 AT 12:22 PM

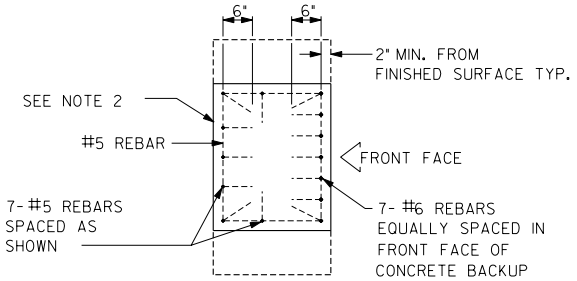

PLAN

REINFORCEMENT DETAIL

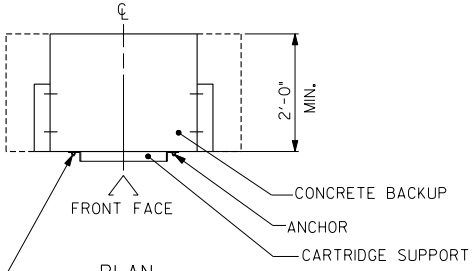

PLAN

USE ANCHOR TO ATTACH CARTRIDGE SUPPORT BRACKET TO CONCRETE, RECOMMENDED HOLE DEPTH 3¼" TORQUE SHALL BE 20 FT.-LBS.

TYPICAL BACKUP WIDTHS

WIDTH	"A"
NARROW	2'-0"
MEDIUM	2'-6"
WIDE	3'-0"

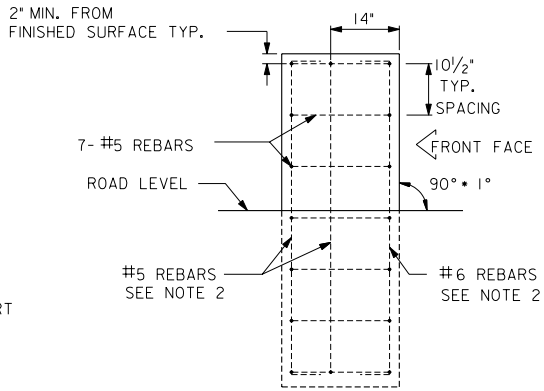

SIDE VIEW

REINFORCEMENT DETAIL

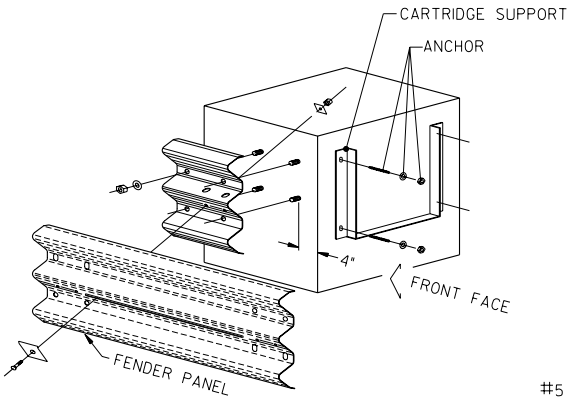

SIDE PANEL INSTALLATION

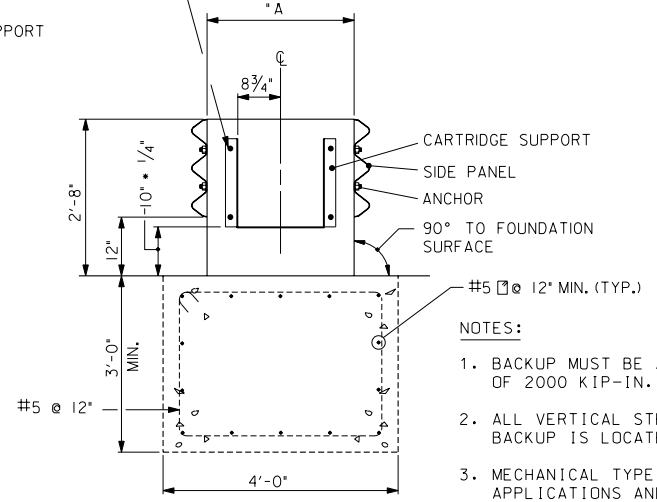

ELEVATION

NOTES:

1. BACKUP MUST BE ABLE TO WITHSTAND A MAXIMUM OVERTURNING MOMENT OF 2000 KIP-IN. AT DECK LINE FOR DURATION OF ±40 MILLISECONDS.
2. ALL VERTICAL STEEL SHALL BE DOWELED INTO DECK IF CONCRETE BACKUP IS LOCATED ON DECK STRUCTURE.
3. MECHANICAL TYPE ANCHORS MAY BE SUBSTITUTED IN HORIZONTAL APPLICATIONS AND SHALL BE SUPPLIED BY OTHERS. THE SUBSTITUTED ANCHORS SHALL BE THE SAME DIAMETER AS THE MP-3 ANCHORS AND SHALL HAVE THE FOLLOWING MINIMUM PULLOUT STRENGTHS: ⅜" DIA. - 2,760 POUNDS; ¾" DIA. - 11,000 POUNDS.
4. RIGID BACKUP ASSEMBLY SHALL CONFORM TO MANUFACTURER'S SPECIFICATIONS.

DATE	APPR.	
REVISED		
ISSUED:		
		REFERENCE

RECOMMENDED: DEPUTY CHIEF ENGINEER

APPROVED: CHIEF TRANSPORTATION ENGINEER

TYPICAL CRASH CUSHION SYSTEM RIGID BACKUP ASSEMBLY

DISTRICT OF COLUMBIA
DEPARTMENT OF TRANSPORTATION

DWG. NO. 627.03

p:\4035\dc standard drawings\final\UNCHANGED\627-03.DGN
Friday, April 03, 2009 AT 12:22 PM

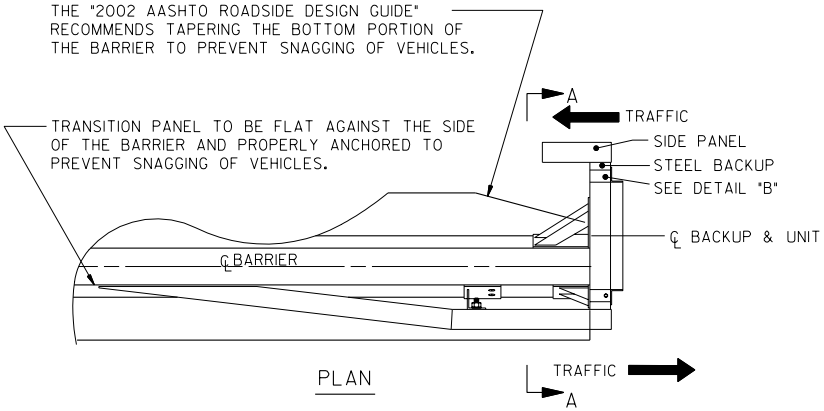

PLAN

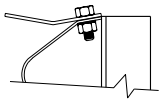

DETAIL "B"

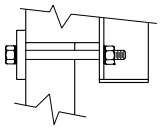

DETAIL "A"

TYPICAL BACKUP DIMENSIONS

TABLE

WIDTH	"A"	"B"	"C"
NARROW	2'-0"	6" TO 10"	24" TO 28"
MEDIUM	2'-6"	10" TO 17"	28" TO 35"
WIDE	3'-0"	17" TO 23"	35" TO 41"

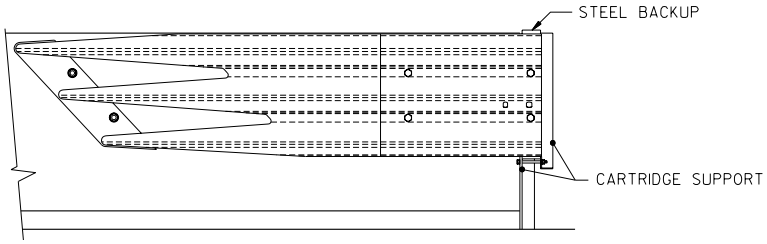

SIDE VIEW

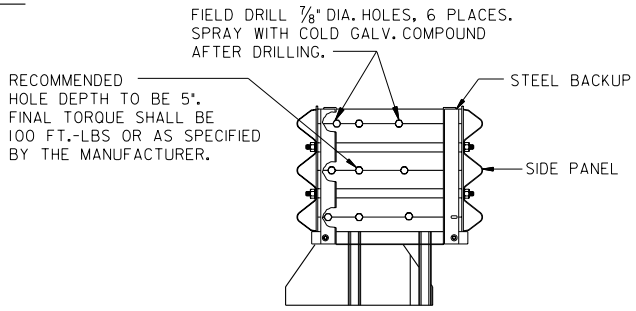

FRONT VIEW

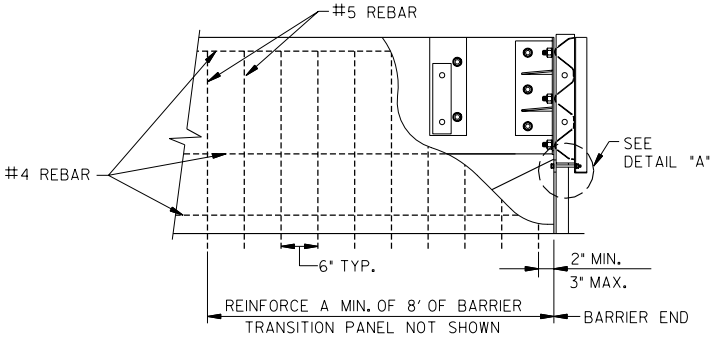

SIDE VIEW

NOTE:

1. DIMENSIONS AND DETAILS OF ATTACHMENT HARDWARE TO BE SHOWN ON THE SHOP DRAWINGS SUPPLIED BY THE MANUFACTURER.

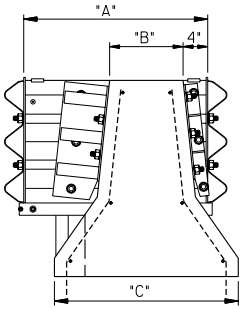

SECTION A-A

DATE	APPR.	
REVISED		
ISSUED:		
		REFERENCE

RECOMMENDED: DEPUTY CHIEF ENGINEER

APPROVED: CHIEF TRANSPORTATION ENGINEER

TYPICAL CRASH CUSHION SYSTEM BACKUP ASSEMBLY FOR NEW JERSEY OR F SHAPE MEDIAN BARRIER (BIDIRECTIONAL)

d. DISTRICT OF COLUMBIA
DEPARTMENT OF TRANSPORTATION

DWG. NO. 627.04

p:\4035\dc standard drawings\final\UNCHANGED\627-04.DGN
Friday, April 03, 2009 AT 12:22 PM

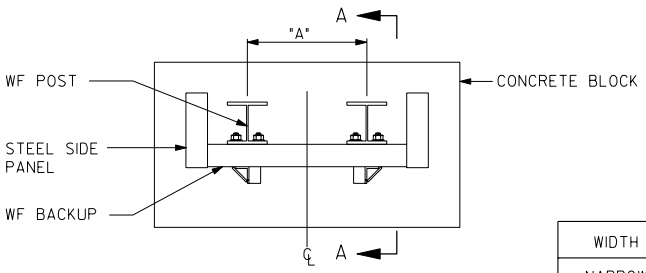

TOP VIEW

NOTES:

1. PRE-ASSEMBLE BACKUP TO WIDE FLANGE (WF) POSTS PRIOR TO EMBEDDING IN CONCRETE.
2. DIMENSIONS AND DETAILS OF ATTACHMENT HARDWARE TO BE SHOWN ON THE SHOP DRAWINGS SUPPLIED BY THE MANUFACTURER.

TYPICAL BACKUP DIMENSIONS

WIDTH	"A"	"B"	"C"
NARROW	1'-0"	2'-0"	3'-7½"
MEDIUM	1'-6"	2'-6"	5'-0"
WIDE	2'-0"	3'-0"	8'-6"

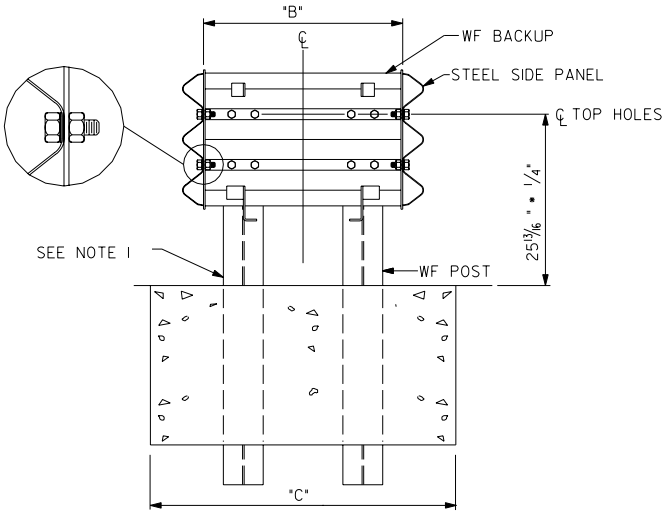

FRONT VIEW

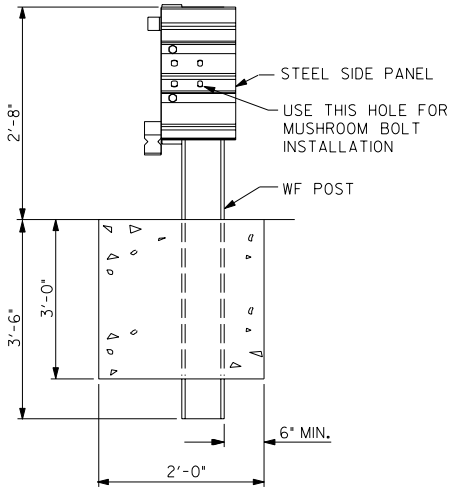

SIDE VIEW

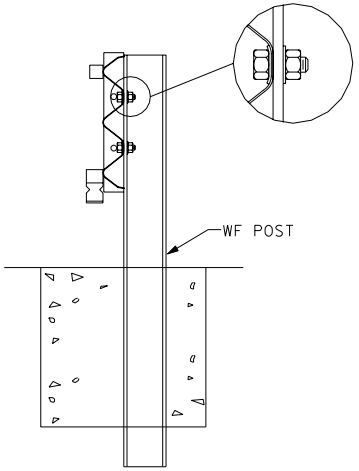

SECTION A-A

DATE	APPR.	
REVISED		
ISSUED:		
		REFERENCE

RECOMMENDED: DEPUTY CHIEF ENGINEER

APPROVED: CHIEF TRANSPORTATION ENGINEER

TYPICAL CRASH CUSHION SYSTEM WIDE FLANGE BACKUP ASSEMBLY

DISTRICT OF COLUMBIA
DEPARTMENT OF TRANSPORTATION

DWG. NO. 627.05

p:\4035\dc standard drawings\final\UNCHANGED\627-05.DGN
Friday, April 03, 2009 AT 12:22 PM

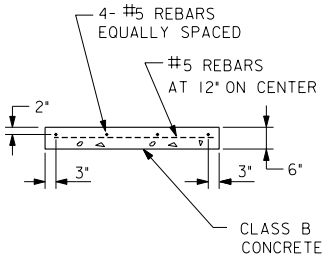

SECTION A-A

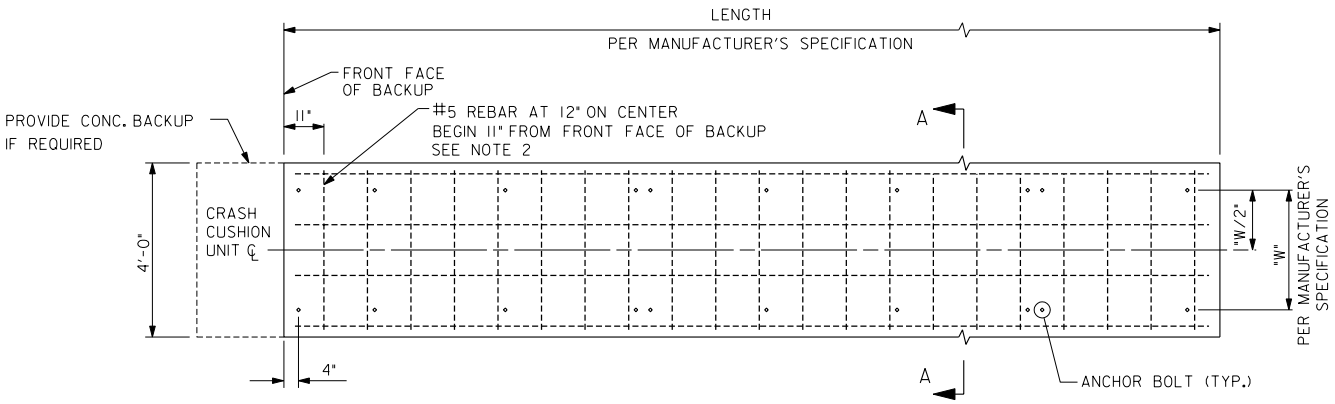

PLAN

NOTES:

1. USE RAIL FOR ANCHOR BOLT LAYOUT TEMPLATE.
2. PLACE REBAR TO AVOID INTERFERENCE WHEN DRILLING ANCHOR BOLT HOLES.
3. CROSS SLOPE OF PAD SHALL NOT EXCEED 8% AND NOT VARY MORE THAN 2% FROM FRONT TO BACK.

p:\4035\dc standard drawings\final\UNCHANGED\627-06.DGN
Friday, April 03, 2009 AT 12:22 PM

DATE	APPR.	
REVISED		
ISSUED:		
		REFERENCE

RECOMMENDED: DEPUTY CHIEF ENGINEER

APPROVED: CHIEF TRANSPORTATION ENGINEER

TYPICAL CRASH CUSHION SYSTEM CONCRETE FOUNDATION AND BOLT LAYOUT
(FOR CONCRETE BACKUPS)

d. DISTRICT OF COLUMBIA
DEPARTMENT OF TRANSPORTATION

DWG. NO. 627.06

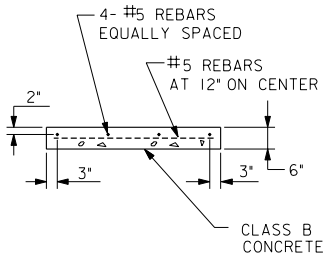

SECTION A-A

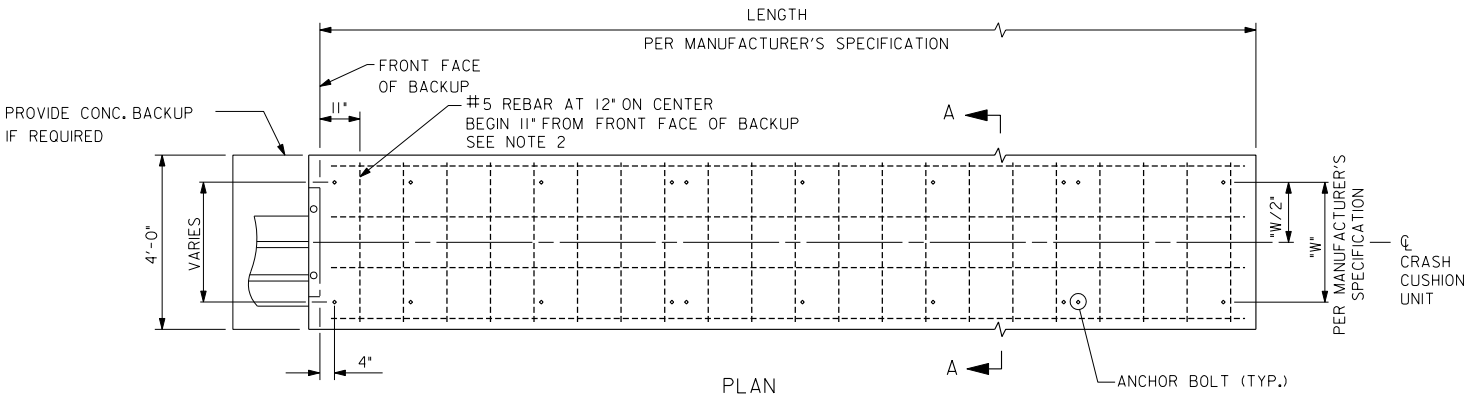

PLAN

NOTES:

1. USE RAIL FOR ANCHOR BOLT LAYOUT TEMPLATE.
2. PLACE REBAR TO AVOID INTERFERENCE WHEN DRILLING ANCHOR BOLT HOLES.
3. CROSS SLOPE OF PAD SHALL NOT EXCEED 8% AND NOT VARY MORE THAN 2% FROM FRONT TO BACK.

p:\4035\dc standard drawings\final\UNCHANGED\627-07.DGN
Friday, April 03, 2009 AT 12:22 PM

DATE	APPR.	
REVISED		
ISSUED:		
		REFERENCE

RECOMMENDED: DEPUTY CHIEF ENGINEER

APPROVED: CHIEF TRANSPORTATION ENGINEER

TYPICAL CRASH CUSHION SYSTEM CONCRETE FOUNDATION AND BOLT LAYOUT
(FOR NEW JERSEY OR F SHAPE BACKUPS)

d. DISTRICT OF COLUMBIA
DEPARTMENT OF TRANSPORTATION

DWG. NO. 627.07

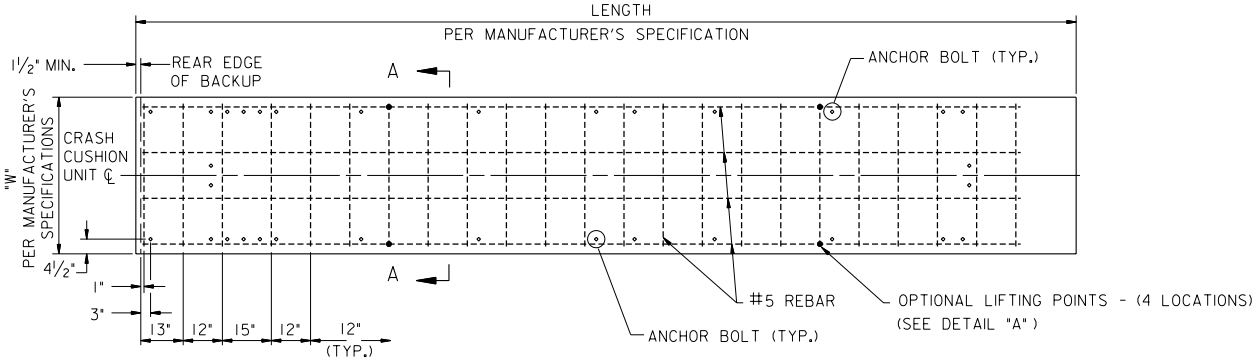

PLAN

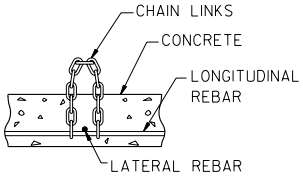

SECTION B-B

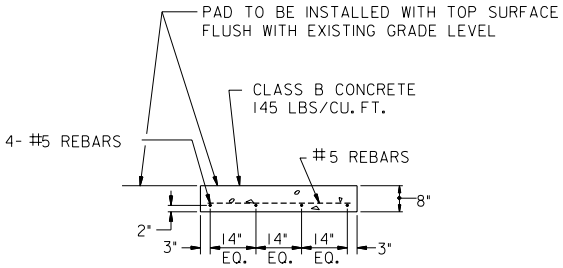

SECTION A-A

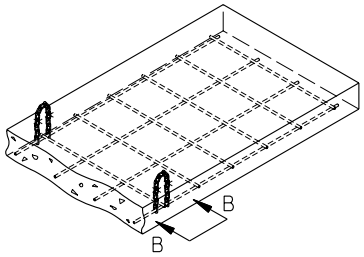

DETAIL "A"

OPTIONAL LIFTING POINTS
USE ½ INCH PROOF COIL CHAIN. THE CHAIN MUST MEET THE REQUIREMENTS OF ASTM A-413 GRADE 28. THE MINIMUM LENGTH CHAIN IS 15 LINKS, AND THE REBAR WILL BE INSERTED THROUGH BOTH ENDS AS SHOWN.

NOTES:

1. USE THE CRASH CUSHION SYSTEM STEEL PLATFORM AS A TEMPLATE TO MARK THE CONCRETE ANCHOR BOLT LOCATIONS.
2. ACCURATE PLACEMENT OF REINFORCING STEEL IS CRITICAL TO AVOID INTERFERENCE WITH CONCRETE ANCHOR BOLTS.
3. CROSS SLOPE OF PAD SHALL NOT EXCEED 8% AND NOT VARY MORE THAN 2% FROM FRONT TO BACK.

DATE	APPR.	REFERENCE
REVISED		
ISSUED:		

RECOMMENDED: DEPUTY CHIEF ENGINEER

APPROVED: CHIEF TRANSPORTATION ENGINEER

TYPICAL CRASH CUSHION SYSTEM CONSTRUCTION ZONE CONCRETE PAD

d. DISTRICT OF COLUMBIA
DEPARTMENT OF TRANSPORTATION

DWG. NO. 627.08

p:\4035\dc standard drawings\final\UNCHANGED\627-08.DGN
Friday, April 03, 2009 AT 12:22 PM

KEY

1. CRUSHABLE CARTRIDGE
2. DIAPHRAGM
3. FENDER PANEL
4. NOSE COVER
5. MONORAIL OR DOUBLE RAIL
6. ANCHOR BASE

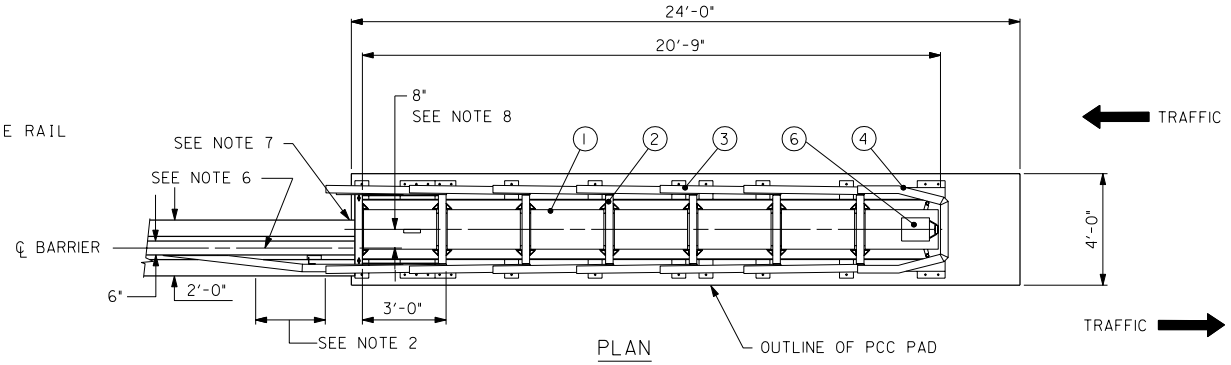

PLAN
(6 BAY UNIT SHOWN)

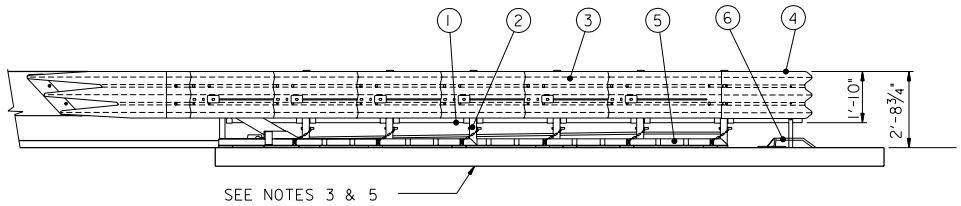

ELEVATION
LEFT SIDE

NOTES:

1. REMOVE ALL CURBS AND ISLANDS FOR PROPER IMPACT PERFORMANCE.
2. PROVISION SHALL BE MADE FOR REAR FENDER PANEL CLEARANCE TO SLIDE REARWARD UPON IMPACT.
3. CAUTION: THE CONSTRUCTION ZONE CRASH CUSHION MUST BE CORRECTLY ANCHORED FOR PROPER IMPACT PERFORMANCE. THE UNIT SHALL BE ANCHORED ACCORDING TO THE MANUFACTURER'S SPECIFICATIONS.
4. WHERE NECESSARY, THE CONTRACTOR SHALL SUPPLY A TRANSITION, DESIGNED FOR THE APPROVED CRASH CUSHION FROM THE CRASH CUSHION TO THE OBJECT BEING SHIELDED.
5. IF THE UNIT IS ANCHORED TO ASPHALT, IT SHOULD BE RELOCATED TO FRESH, UNDISTURBED ASPHALT AFTER EACH IMPACT TO ENSURE ADEQUATE FUTURE IMPACT PERFORMANCE. THE 18" THREADED RODS OR ANCHOR PINS SHOULD THEN BE INSTALLED. IF NECESSARY, REPAVE AREA.
6. CAUTION: ℄ OF CRASH CUSHION SYSTEM SHALL BE PARALLEL WITH ℄ OF BARRIER ± 1°.
7. CAUTION: MAX. 11" CLEARANCE BETWEEN BACKUP AND BARRIER WALL. ZERO CLEARANCE RECOMMENDED.
8. 8" OFFSET IS BASED ON USING CONCRETE BARRIER (CB) WITH A 6" TOP. ANY VARIANCE FROM THIS MUST BE COMPENSATED BY CHANGING THE OFFSET BETWEEN THE UNIT ℄ AND THE CONCRETE BARRIER ℄ OFFSET = $11" - \frac{(\text{WIDTH OF CB TOP})}{2}$
9. CONTRACTOR SHALL SUBMIT SHOP DRAWING FOR APPROVAL OF SELECTED CRASH CUSHION SYSTEM, AND NCHRP REPORT 350, TL-2 OR TL-3 CERTIFICATION.

DATE	APPR.	REFERENCE
REVISED		
ISSUED:		

RECOMMENDED: DEPUTY CHIEF ENGINEER

APPROVED: CHIEF TRANSPORTATION ENGINEER

TYPICAL CRASH CUSHION SYSTEM CONSTRUCTION ZONE WITH LEFT SIDE 8" OFFSET TRANSITION PANEL

d. DISTRICT OF COLUMBIA
DEPARTMENT OF TRANSPORTATION

DWG. NO. 627.09

p:\4035\dc standard drawings\final\UNCHANGED\627-09.DGN
Friday, April 03, 2009 AT 12:22 PM

U.S.D.A. - NRCS - SCE - 1

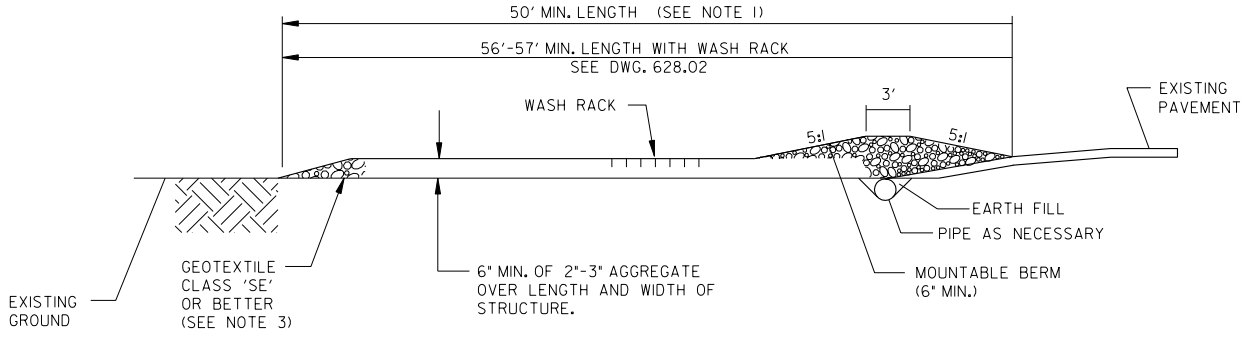

PROFILE

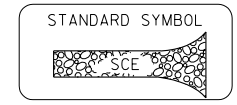

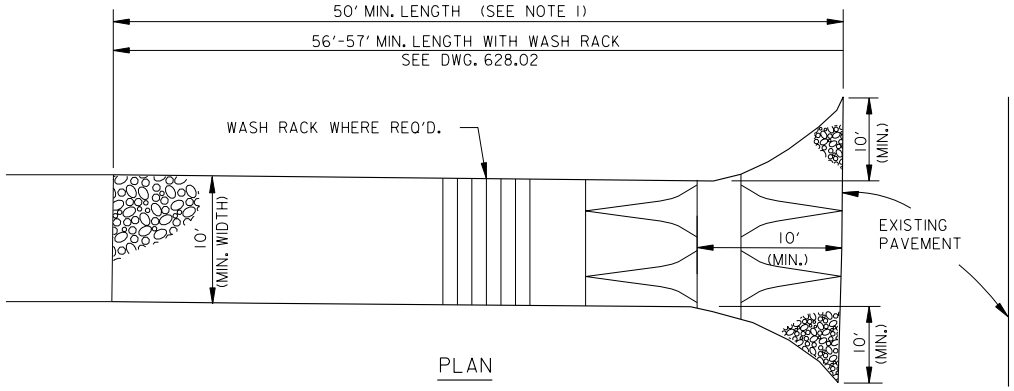

PLAN

CONSTRUCTION SPECIFICATIONS:

1. LENGTH - 50' MINIMUM (30' FOR SINGLE RESIDENCE LOT).

2. WIDTH - 10' MINIMUM, SHOULD BE FLARED AT THE EXISTING ROAD TO PROVIDE A TURNING RADIUS.

3. GEOTEXTILE FABRIC (FILTER CLOTH) SHALL BE PLACED OVER THE EXISTING GROUND PRIOR TO PLACING STONE. THE PLAN APPROVAL AUTHORITY MAY NOT REQUIRE SINGLE FAMILY RESIDENCES TO USE GEOTEXTILE.

4. STONE - CRUSHED AGGREGATE (2" TO 3") OR RECLAIIMED OR RECYCLED CONCRETE EQUIVALENT SHALL BE PLACED AT LEAST 6" DEEP OVER THE LENGTH AND WIDTH OF THE ENTRANCE.

5. SURFACE WATER - ALL SURFACE WATER FLOWING TO OR DIVERTED TOWARD CONSTRUCTION ENTRANCE SHALL BE PIPED THROUGH TO ENTRANCE, MAINTAINING POSITIVE DRAINAGE. PIPE INSTALLED THROUGH THE STABILIZED CONSTRUCTION ENTRANCE SHALL BE PROTECTED WITH A MOUNTABLE BERM WITH 5:1 SLOPES AND A MINIMUM OF 6" OF STONE OVER THE PIPE. WHEN THE SCE IS LOCATED AT A HIGH SPOT AND HAS NO DRAINAGE TO CONVEY, A PIPE WILL NOT BE NECESSARY. THE PIPE SHOULD BE SIZED ACCORDING TO THE AMOUNT OF RUNOFF TO BE CONVEYED. A 6" MINIMUM WILL BE REQUIRED. THE MOUNTABLE BERM IS REQUIRED ON ALL STABILIZED CONSTRUCTION ENTRANCES NOT LOCATED AT A HIGH SPOT.

6. LOCATION - A STABILIZED CONSTRUCTION ENTRANCE SHALL BE LOCATED AT EVERY POINT WHERE CONSTRUCTION TRAFFIC ENTERS OR LEAVES A CONSTRUCTION SITE. VEHICLES LEAVING THE SITE MUST TRAVEL OVER THE ENTIRE LENGTH OF THE STABILIZED CONSTRUCTION ENTRANCE.

DATE	APPR.	REFERENCE
REVISED		
ISSUED:		

RECOMMENDED: DEPUTY CHIEF ENGINEER

APPROVED: CHIEF TRANSPORTATION ENGINEER

STABILIZED CONSTRUCTION ENTRANCE

d. DISTRICT OF COLUMBIA
DEPARTMENT OF TRANSPORTATION

DWG. NO. 628.01

p:\4035\dc standard drawings\final\UNCHANGED\628-01.DGN
Friday, April 03, 2009 AT 12:22 PM

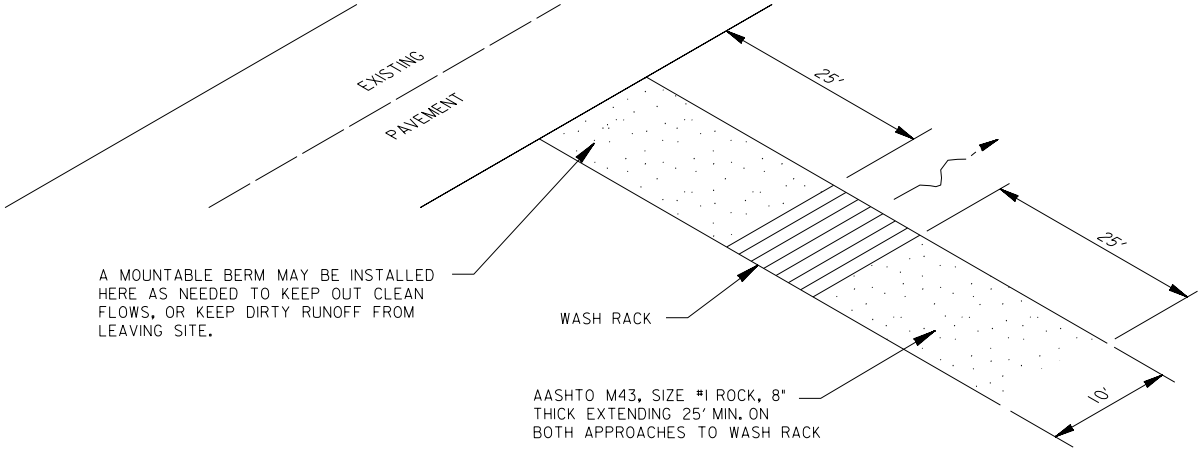

PERSPECTIVE VIEW

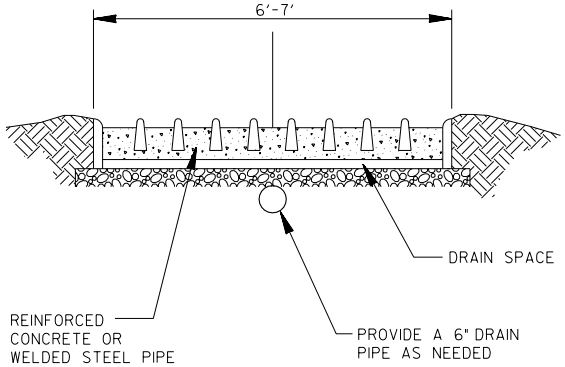

CROSS SECTION

MAINTENANCE NOTES:

1. A STABILIZED CONSTRUCTION ENTRANCE THICKNESS SHALL BE CONSTANTLY MAINTAINED TO THE SPECIFIED DIMENSIONS BY ADDING ROCK. A STOCKPILE OF ROCK MATERIAL SHALL BE MAINTAINED ON SITE FOR THIS PURPOSE. THE DRAIN SPACE UNDER THE WASH RACK SHALL BE KEPT OPEN AT ALL TIMES. DAMAGE TO THE WASH RACK SHALL BE REPAIRED PRIOR TO FURTHER USE OF THE RACK. AT THE END OF EACH CONSTRUCTION DAY, ALL SEDIMENT DEPOSITED ON PAVED ROADWAYS SHALL BE REMOVED AND RETURNED TO THE CONSTRUCTION SITE.

2. CONSTRUCTION VEHICLES SHALL STOP WITH FIRST THE FRONT WHEELS, THEN THE REAR WHEELS OVER THE WASH RACK IN ORDER FOR BOTH SETS OF WHEELS TO BE HOSED OFF.

3. THE WASH RACK SHALL DISCHARGE TO A SEDIMENT REMOVAL FACILITY, SUCH AS A VEGETATED FILTER STRIP OR INTO A CHANNEL LEADING TO A SEDIMENT REMOVAL DEVICE, SUCH AS A SEDIMENT TRAP OR TANK.

DATE	APPR.	REFERENCE
REVISED		
ISSUED:		

RECOMMENDED: DEPUTY CHIEF ENGINEER

APPROVED: CHIEF TRANSPORTATION ENGINEER

STABILIZED CONSTRUCTION ENTRANCE WITH WASH RACK

DISTRICT OF COLUMBIA
DEPARTMENT OF TRANSPORTATION

DWG. NO. 628.02

p:\4035\dc standard drawings\final\UNCHANGED\628-02.DGN
Friday, April 03, 2009 AT 12:22 PM

STANDARD SYMBOL

SBD

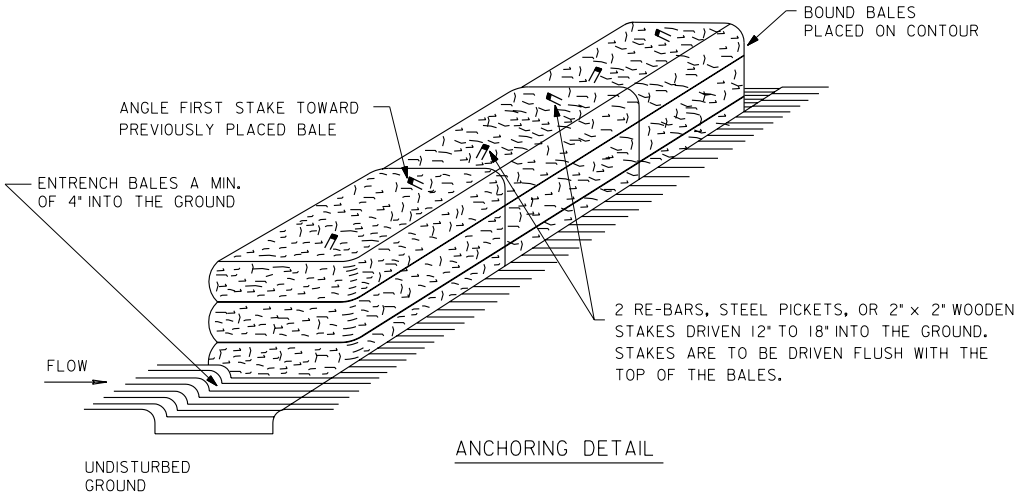

ANCHORING DETAIL

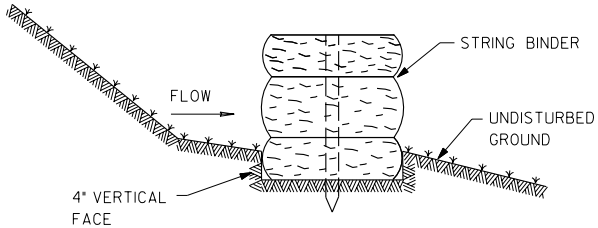

BEDDING DETAIL

CONSTRUCTION SPECIFICATIONS:

1. BALES SHALL BE PLACED AT THE TOE OF A SLOPE, ON THE CONTOUR, AND IN A ROW WITH THE ENDS OF EACH BALE TIGHTLY ABUTTING THE ADJACENT BALES.

2. EACH BALE SHALL BE ENTRENCHED IN THE SOIL A MINIMUM OF 4 INCHES AND PLACED SO THE BINDINGS ARE HORIZONTAL.

3. BALES SHALL BE SECURELY ANCHORED IN PLACE BY EITHER TWO 2" x 2" WOODEN STAKES, STEEL PICKETS, OR RE-BARS DRIVEN THROUGH THE BALE 12" TO 18" INTO THE GROUND. THE FIRST STAKE IN EACH BALE SHALL BE DRIVEN TOWARD THE PREVIOUSLY PLACED BALE AT AN ANGLE TO FORCE THE BALES TOGETHER. STAKES SHALL BE DRIVEN FLUSH WITH THE TOP OF THE BALE.

4. STRAW BALE DIKES SHALL BE INSPECTED FREQUENTLY AND AFTER EACH RAIN EVENT AND MAINTENANCE PERFORMED AS NECESSARY.

5. ALL BALES SHALL BE REMOVED WHEN THE SITE HAS BEEN STABILIZED. THE TRENCH WHERE THE BALES WERE LOCATED SHALL BE GRADED FLUSH AND STABILIZED.

DATE	APPR.	REFERENCE
REVISED		
ISSUED:		

RECOMMENDED: DEPUTY CHIEF ENGINEER

APPROVED: CHIEF TRANSPORTATION ENGINEER

STRAW BALE DIKE

DISTRICT OF COLUMBIA
DEPARTMENT OF TRANSPORTATION

DWG. NO. 628.03

p:\4035\dc standard drawings\final\UNCHANGED\628-03.DGN
Friday, April 03, 2009 AT 12:22 PM

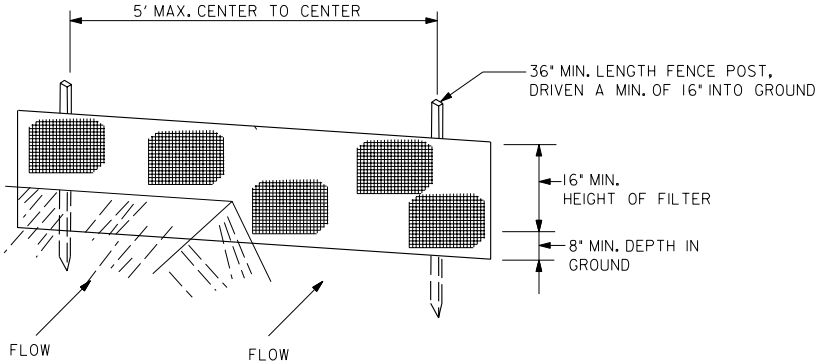

PERSPECTIVE VIEW

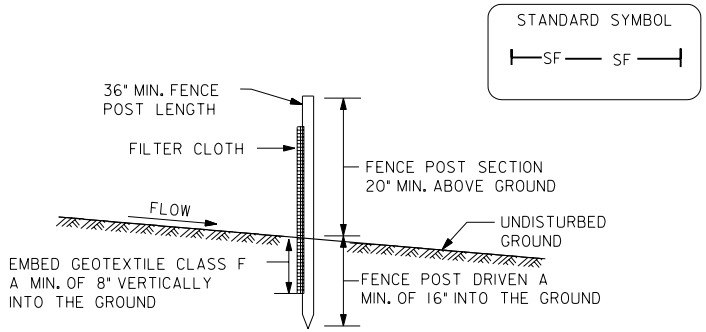

CROSS SECTION

SILT FENCE DESIGN CONSTRAINTS

SLOPE STEEPNESS	(MAXIMUM) SLOPE LENGTH	(MAXIMUM) SILT FENCE LENGTH
FLATTER THAN 50:1 (2%)	UNLIMITED	UNLIMITED
>50:1 TO 10:1 (2-10%)	125 FEET	1,000 FEET
>10:1 TO 5:1 (10-20%)	100 FEET	750 FEET
>5:1 TO 3:1 (20-33%)	60 FEET	500 FEET
>3:1 TO 2:1 (33-50%)	40 FEET	250 FEET
>2:1 (>50%)	20 FEET	125 FEET

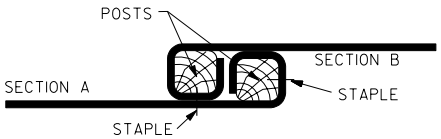

JOINING TWO ADJACENT SILT FENCE SECTIONS
TOP VIEW

CONSTRUCTION SPECIFICATIONS:

1. FENCE POSTS SHALL BE A MIN. OF 36" LONG DRIVEN 16" MIN. INTO THE GROUND. WOOD POSTS SHALL BE 1½" X 1½" SQUARE (MIN.) CUT, OR 1¾" DIAMETER (MIN.) ROUND AND SHALL BE OF SOUND QUALITY HARDWOOD. STEEL POSTS WILL BE STANDARD T OR U SECTION WEIGHING NOT LESS THAN 1.0 POUND PER LINEAR FOOT.

2. GEOTEXTILE SHALL BE FASTENED SECURELY TO EACH FENCE POST WITH WIRE TIES OR STAPLES AT TOP AND MID-SECTION AND SHALL MEET THE FOLLOWING REQUIREMENTS FOR GEOTEXTILE CLASS F.

TENSILE STRENGTH	50 LBS./IN. (MIN.)	TEST: ASTM D-4595
TENSILE MODULUS	20 LBS./IN. (MIN.)	TEST: ASTM D-4595
FLOW RATE	0.3 GAL./SQ. FT./MINUTE (MAX.)	TEST: ASTM D-5141
FILTERING EFFICIENCY	75% (MIN.)	TEST: ASTM D-5141

3. WHERE ENDS OF GEOTEXTILE FABRIC COME TOGETHER, THEY SHALL BE OVERLAPPED, FOLDED AND STAPLED TO PREVENT SEDIMENT BYPASS.

4. SILT FENCE SHALL BE INSPECTED AFTER EACH RAINFALL EVENT AND MAINTAINED WHEN BULGES OCCUR OR WHEN SEDIMENT ACCUMLATION REACHES 30% OF THE FABRIC HEIGHT.

DATE	APPR.	REFERENCE
REVISED		
ISSUED:		

RECOMMENDED: DEPUTY CHIEF ENGINEER

APPROVED: CHIEF TRANSPORTATION ENGINEER

SILT FENCE

d. DISTRICT OF COLUMBIA
DEPARTMENT OF TRANSPORTATION

DWG. NO. 628.04

p:\4035\dc standard drawings\final\UNCHANGED\628-04.DGN
Friday, April 03, 2009 AT 12:22 PM

U.S.D.A. - NRCS - SSF - 1

NOTE:

FENCE POST SPACING SHALL NOT EXCEED 10' CENTER TO CENTER.

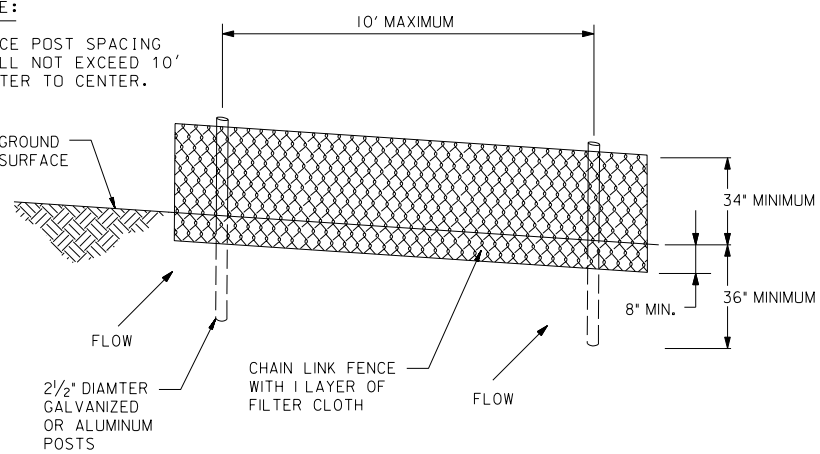

PERSPECTIVE VIEW

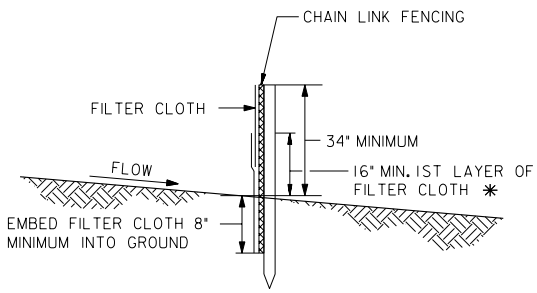

✳ IF MULTIPLE LAYERS ARE REQUIRED TO ATTAIN 42".

CROSS SECTION

STANDARD SYMBOL

SSF — SSF

SUPER SILT FENCE DESIGN CRITERIA

LENGTH OF THE FLOW CONTRIBUTING TO SUPER SILT FENCE SHALL CONFORM TO THE FOLLOWING LIMITATIONS:

SLOPE	SLOPE STEEPNESS	SLOPE LENGTH (MAXIMUM)	SILT FENCE LENGTH (MAXIMUM)
>0-10%	0 TO 10:1	UNLIMITED	UNLIMITED
>10-20%	>10:1 TO 5:1	200 FEET	1,500 FEET
>20-33%	>5:1 TO 3:1	100 FEET	1,000 FEET
>33-50%	>3:1 TO 2:1	100 FEET	500 FEET
> 50%	>2:1	50 FEET	250 FEET

CONSTRUCTION SPECIFICATIONS:

1. FENCING SHALL BE 42" IN HEIGHT AND CONSTRUCTED IN ACCORDANCE WITH THE LATEST DDOT DETAILS FOR CHAIN LINK FENCING DWG. NO. 607.01. THE SPECIFICATION FOR A 6' FENCE SHALL BE USED, SUBSTITUTING 42" FABRIC AND 6' LENGTH POSTS. (POSTS DO NOT NEED TO BE SET IN CONCRETE.)

2. CHAIN LINK FENCE SHALL BE FASTENED SECURELY TO THE FENCE POSTS WITH WIRE TIES. THE LOWER TENSION WIRE, BRACE AND TRUSS RODS, DRIVE ANCHORS AND POST CAPS ARE NOT REQUIRED EXCEPT ON THE ENDS OF THE FENCE.

3. FILTER CLOTH SHALL BE FASTENED SECURELY TO THE CHAIN LINK FENCE WITH TIES SPACED EVERY 24" AT THE TOP AND MID-SECTION.

4. FILTER CLOTH SHALL BE EMBEDDED A MINIMUM OF 8" INTO THE GROUND.

5. WHEN TWO SECTIONS OF FILTER CLOTH ADJOIN EACH OTHER, THEY SHALL BE OVERAPPED BY 6" AND FOLDED.

6. MAINTENANCE SHALL BE PERFORMED AS NEEDED AND SILT BUILDUPS REMOVED WHEN "BULGES" DEVELOP IN THE SILT FENCE, OR WHEN SILT REACHES 30% OF EXPOSED (34") FENCE HEIGHT.

7. FILTER CLOTH SHALL BE FASTENED SECURELY TO EACH FENCE POST WITH WIRE TIES OR STAPLES AT TOP AND MID-SECTION AND SHALL MEET THE FOLLOWING REQUIREMENTS FOR GEOTEXTILE CLASS F:

TENSILE STRENGTH	50 LBS./IN. (MIN.)	TEST: ASTM D-4595
TENSILE MODULUS	20 LBS./IN. (MIN.)	TEST: ASTM D-4595
FLOW RATE	0.3 GAL./SQ. FT./MINUTE (MAX.)	TEST: ASTM D-5141
FILTERING EFFICIENCY	75% (MIN.)	TEST: ASTM D-5141

DATE	APPR.	REFERENCE
REVISED		
ISSUED:		

RECOMMENDED: DEPUTY CHIEF ENGINEER

APPROVED: CHIEF TRANSPORTATION ENGINEER

SUPER SILT FENCE

DISTRICT OF COLUMBIA
DEPARTMENT OF TRANSPORTATION

DWG. NO. 628.05

p:\4035\dc standard drawings\final\UNCHANGED\628-05.DGN
Friday, April 03, 2009 AT 12:22 PM

STANDARD SYMBOL

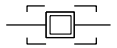

SIP

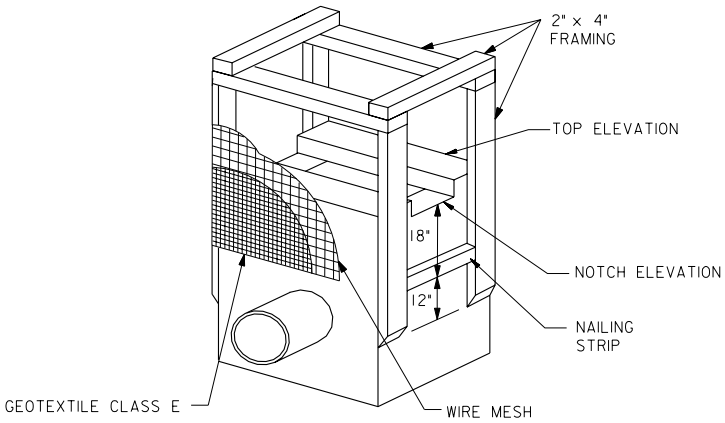

MAXIMUM DRAINAGE AREA = 1/4 ACRE

PERSPECTIVE VIEW

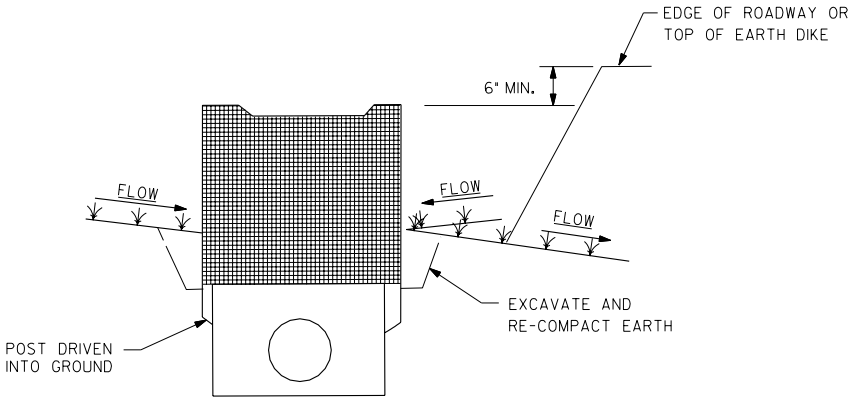

CROSS SECTION

CONSTRUCTION SPECIFICATIONS:

1. EXCAVATE COMPLETELY AROUND THE INLET TO A DEPTH OF 18" BELOW THE NOTCH ELEVATION.

2. DRIVE THE 2" x 4" CONSTRUCTION GRADE LUMBER POSTS 1' INTO THE GROUND AT EACH CORNER OF THE INLET. PLACE NAIL STRIPS BETWEEN THE POSTS ON THE ENDS OF THE INLET. ASSEMBLE THE TOP PORTION OF THE 2" x 4" FRAME USING THE OVERLAP JOINT SHOWN ABOVE. THE TOP OF THE FRAME (WEIR) MUST BE 6" BELOW ADJACENT ROADWAYS WHERE FLOODING AND SAFETY ISSUES MAY ARISE.

3. STRETCH THE 1/2" x 1/2" WIRE MESH TIGHTLY AROUND THE FRAME AND FASTEN SECURELY. THE ENDS MUST MEET AND OVERLAP AT A POST.

4. STRETCH THE GEOTEXTILE CLASS E TIGHTLY OVER THE WIRE MESH WITH THE GEOTEXTILE EXTENDING FROM THE TOP OF THE FRAME TO 18" BELOW THE INLET NOTCH ELEVATION. FASTEN THE GEOTEXTILE FIRMLY TO THE FRAME. THE ENDS OF THE GEOTEXTILE MUST MEET AT A POST, BE OVERLAPPED AND FOLDED, THEN FASTENED DOWN.

5. BACKFILL AROUND THE INLET IN COMPACTED 6" LAYERS UNTIL THE LAYER OF EARTH IS LEVEL WITH THE NOTCH ELEVATION ON THE ENDS AND TOP ELEVATION ON THE SIDES.

6. IF THE INLET IS NOT IN A SUMP, CONSTRUCT A COMPACTED EARTH DIKE ACROSS THE DITCH LINE DIRECTLY BELOW IT. THE TOP OF THE EARTH DIKE SHOULD BE AT LEAST 6" HIGHER THAN THE TOP OF THE FRAME.

7. THE STRUCTURE MUST BE INSPECTED PERIODICALLY AND AFTER EACH RAIN AND THE GEOTEXTILE REPLACED WHEN IT BECOMES CLOGGED.

DATE	APPR.	REFERENCE
REVISED		
ISSUED:		

RECOMMENDED: DEPUTY CHIEF ENGINEER

APPROVED: CHIEF TRANSPORTATION ENGINEER

STANDARD INLET PROTECTION

d. DISTRICT OF COLUMBIA
DEPARTMENT OF TRANSPORTATION

DWG. NO. 628.06

p:\4035\dc standard drawings\final\UNCHANGED\628-06.DGN
Friday, April 03, 2009 AT 12:22 PM

U.S.D.A. - NRCS - AGIP - 1

STANDARD SYMBOL

AGIP

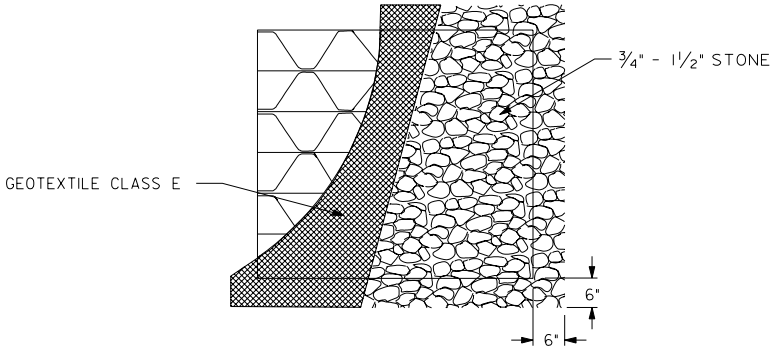

PLAN/CUT AWAY VIEW

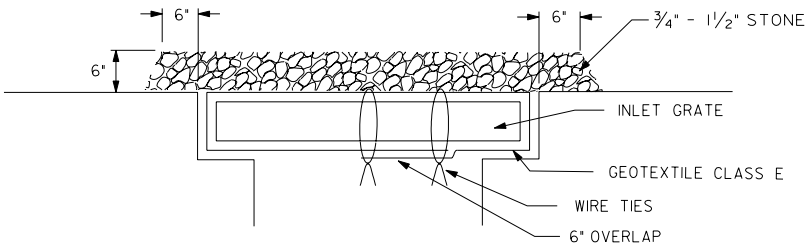

MAX. DRAINAGE AREA = 1/4 ACRE

CROSS SECTION

CONSTRUCTION SPECIFICATIONS:

1. LIFT GRATE AND WRAP WITH GEOTEXTILE CLASS E TO COMPLETELY COVER ALL OPENINGS, THEN SET GRATE BACK IN PLACE.

2. PLACE 3/4" TO 1 1/2" STONE, 6" THICK ON THE GRATE TO SECURE THE FABRIC AND PROVIDE ADDITIONAL FILTRATION.

p:\4035\dc standard drawings\final\UNCHANGED\628-07.DGN
Friday, April 03, 2009 AT 12:22 PM

DATE	APPR.	
REVISED		
ISSUED:		
		REFERENCE

RECOMMENDED: DEPUTY CHIEF ENGINEER

APPROVED: CHIEF TRANSPORTATION ENGINEER

AT GRADE INLET PROTECTION

d. DISTRICT OF COLUMBIA
DEPARTMENT OF TRANSPORTATION

DWG. NO. 628.07

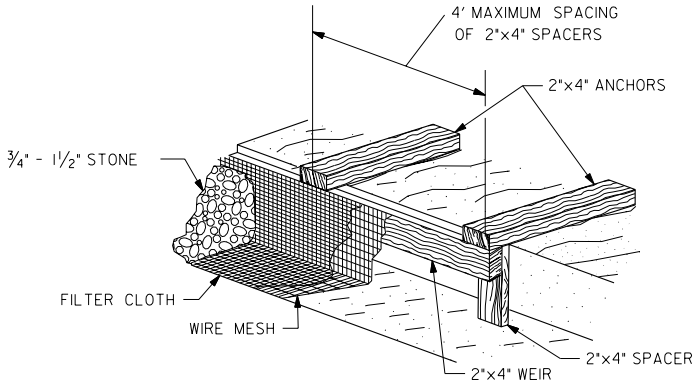

MAX. DRAINAGE AREA = ¼ ACRE

PERSPECTIVE VIEW

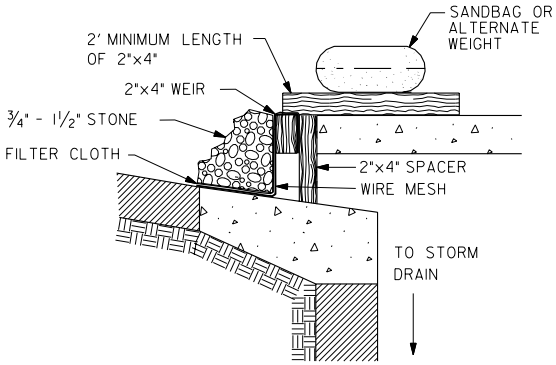

CROSS SECTION

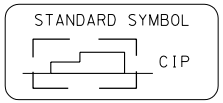

CONSTRUCTION SPECIFICATIONS:

1. ATTACH A CONTINUOUS PIECE OF WIRE MESH (30" MINIMUM WIDTH BY THROAT LENGTH PLUS 4') TO THE 2"x4" WEIR (MEASURING THROAT LENGTH PLUS 2') AS SHOWN.

2. PLACE A CONTINUOUS PIECE OF GEOTEXTILE CLASS E, THE SAME DIMENSIONS AS THE WIRE MESH, OVER THE WIRE MESH AND SECURELY ATTACH IT TO THE 2"x4" WEIR.

3. SECURELY NAIL THE 2"x4" WEIR TO A 9" LONG VERTICAL SPACER TO BE LOCATED BETWEEN THE WEIR AND THE INLET FACE (MAX. 4' APART).

4. PLACE THE ASSEMBLY AGAINST THE INLET THROAT AND NAIL (MINIMUM 2' LENGTHS OF 2"x4" TO THE TOP OF THE WEIR AT SPACER LOCATIONS). THESE 2"x4" ANCHORS SHALL EXTEND ACROSS THE INLET TOP AND BE HELD IN PLACE BY SANDBAGS OR ALTERNATE WEIGHT.

5. THE ASSEMBLY SHALL BE PLACED SO THAT THE END SPACERS ARE A MINIMUM 1' BEYOND BOTH ENDS OF THE THROAT OPENING.

6. FORM THE ½"x½" WIRE MESH AND THE GEOTEXTILE FABRIC TO THE CONCRETE GUTTER AND AGAINST THE FACE OF THE CURB ON BOTH SIDES OF THE INLET. PLACE CLEAN ¾" TO 1½" STONE OVER THE WIRE MESH AND GEOTEXTILE IN SUCH A MANNER TO PREVENT WATER FROM ENTERING THE INLET UNDER OR AROUND THE GEOTEXTILE.

7. THIS TYPE OF PROTECTION MUST BE INSPECTED FREQUENTLY AND THE FILTER CLOTH AND STONE REPLACED WHEN CLOGGED WITH SEDIMENT.

8. ASSURE THAT STORM FLOW DOES NOT BYPASS THE INLET BY INSTALLING A TEMPORARY EARTH OR ASPHALT DIKE TO DIRECT THE FLOW TO THE INLET.

DATE	APPR.	REFERENCE
REVISED		
ISSUED:		

RECOMMENDED: DEPUTY CHIEF ENGINEER

APPROVED: CHIEF TRANSPORTATION ENGINEER

CURB INLET PROTECTION

d. DISTRICT OF COLUMBIA
DEPARTMENT OF TRANSPORTATION

DWG. NO. 628.08

p:\4035\dc standard drawings\final\UNCHANGED\628-08.DGN
Friday, April 03, 2009 AT 12:22 PM

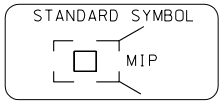

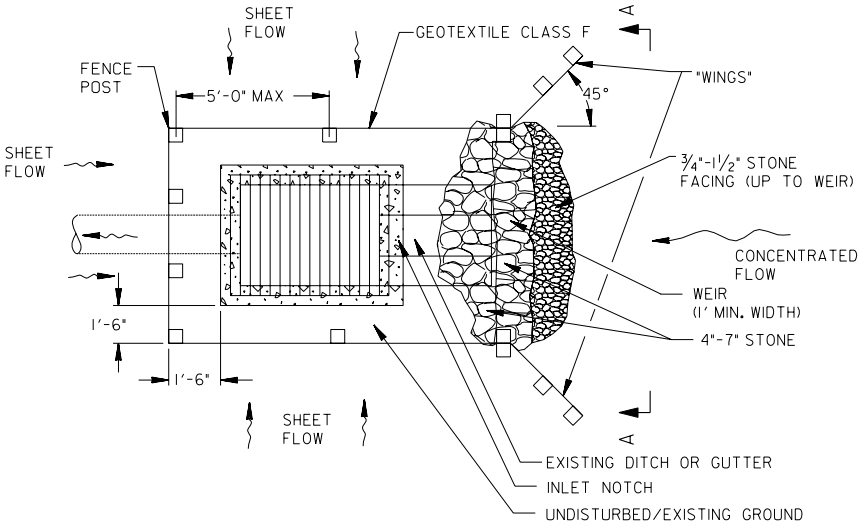

PLAN

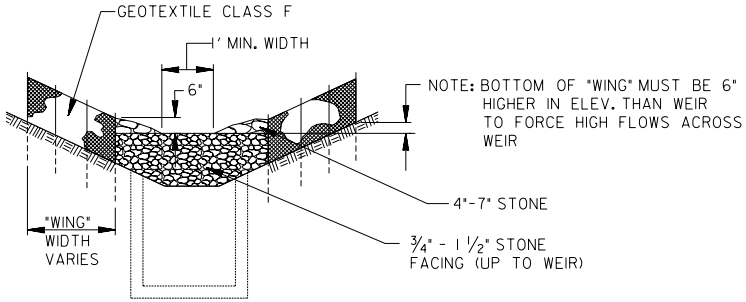

SECTION A-A

CONSTRUCTION SPECIFICATIONS:

1. FENCE POSTS SHALL BE 36" (MIN.) LONG, DRIVEN 16" INTO THE GROUND AND SPACED 5' (MAX.) APART. WOOD POSTS SHALL BE 1½" X 1½" (MIN.) SQUARE CUT OR 1¾" (MIN.) DIAMETER ROUND AND SHALL BE OF SOUND QUALITY HARDWOOD. STEEL POSTS SHALL BE STANDARD T OR U SECTION WEIGHING NOT LESS THAN 1.0 LB./LINEAR FOOT.

2. GEOTEXTILE CLASS F SHALL BE FASTENED SECURELY TO EACH POST WITH WIRE TIES OR STAPLES AT TOP AND MID-SECTION.

3. WHERE ENDS OF GEOTEXTILE FABRIC COME TOGETHER THEY SHALL BE OVERLAPPED, FOLDED AND STAPLED.

4. MEDIAN INLET PROTECTION SHALL BE INSPECTED AFTER EACH RAIN AND MAINTAINED WHEN BULGES OCCUR IN THE FABRIC OR WHEN THE STONE GETS CLOGGED.

5. STONE USED TO CONSTRUCT THE WEIR SHALL BE 4" - 7" WITH A 1' THICK LAYER OF ¾" - 1½" STONE ON THE UPSTREAM FACE.

DATE	APPR.	REFERENCE
REVISED		
ISSUED:		

RECOMMENDED: DEPUTY CHIEF ENGINEER

APPROVED: CHIEF TRANSPORTATION ENGINEER

MEDIAN INLET PROTECTION

DISTRICT OF COLUMBIA
DEPARTMENT OF TRANSPORTATION

DWG. NO. 628.09

p:\4035\dc standard drawings\final\UNCHANGED\628-09.DGN
Friday, April 03, 2009 AT 12:23 PM

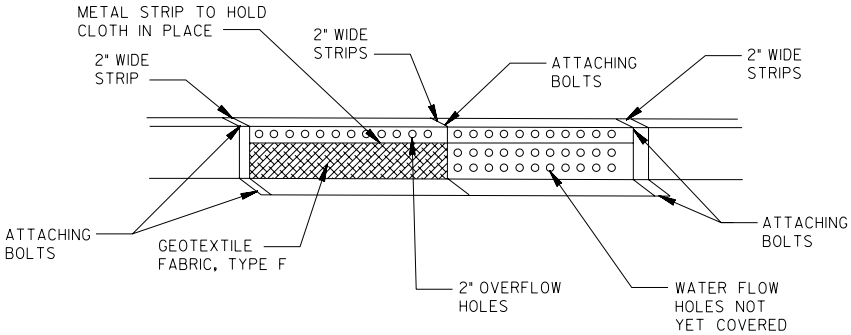

* AT EACH INTERSECTION OF INLET PROTECTOR, OVERLAP A MINIMUM OF 2".

STANDARD INLET GUARD ATTACHMENT METHOD

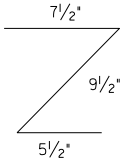

- THE TOP MEASUREMENT OF 7½" IS SET TO PROVIDE A 2" EXTENSION FOR OVERFLOW WHILE AVOIDING BLOCKAGE OF THE MANHOLE COVER.
- MAKE A WATERTIGHT CONNECTION ALONG THE SIDES AND BOTTOM OF THE INLET GUARD WITH THE STREET AND CURB.

STANDARD INLET GUARD DIMENSIONS

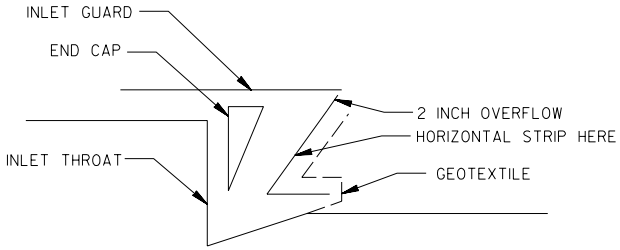

STANDARD INLET GUARD CROSS SECTION

CONSTRUCTION SPECIFICATIONS:

1. POSITION GUARD SECTIONS TO COVER INLET WITH AT LEAST 2 INCHES OF OVERLAP ON EACH END OF INLET.
2. OVERLAP GUARDS AT LEAST 2 INCHES AT THEIR INTERSECTIONS.
3. POSITION THE DESIRED GEOTEXTILE AROUND GUARD SO THAT IT CAN BE TUCKED IN AT THE BOTTOM.
4. POSITION THE GEOTEXTILE SO THAT THE HORIZONTAL METAL STRIP CAN HOLD THE GEOTEXTILE IN PLACE.
5. DO NOT COVER THE 2 INCH OVERFLOW HOLES WITH GEOTEXTILE.
6. ATTACH HORIZONTAL STRIP WITH SHEET METAL SCREWS.
7. PLACE END CLIPS INTO POSITION SO THAT THE TRIANGULAR END GAP IS COVERED AND THE BEND COVERS THE FACE.
8. PLACE 2 INCH ATTACHING CLIPS AT THE ENDS AND INTERSECTIONS OF THE GUARDS.
9. INSERT THE ATTACHING BOLT, NAIL OR SCREW AS SHOWN.
10. MAKE A WATERTIGHT CONNECTION ALONG THE SIDES AND BOTTOM OF THE INLET GUARD WITH THE STREET AND CURB.

DATE	APPR.	REFERENCE
REVISED		
ISSUED:		

RECOMMENDED: DEPUTY CHIEF ENGINEER

APPROVED: CHIEF TRANSPORTATION ENGINEER

AT GRADE INLET GUARD

DISTRICT OF COLUMBIA
DEPARTMENT OF TRANSPORTATION

DWG. NO. 628.10

p:\4035\dc standard drawings\final\UNCHANGED\628-10.DGN
Friday, April 03, 2009 AT 12:23 PM

STANDARD SYMBOL

A – 2 / B – 3

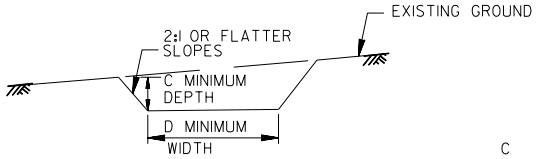

	SWALE A	SWALE B
C	1' MIN.	1' MIN.
D	4' MIN.	6' MIN.
DRAINAGE AREA	5 ACRES MAX.	10 ACRES MAX.

CROSS SECTION

OUTLET AS REQUIRED

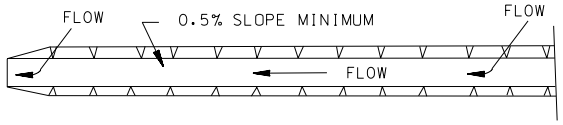

DRAINAGE AREA = 10 ACRES (MAX.)
SLOPE = 10% (MAX)

PLAN

FLOW CHANNEL STABILIZATION
GRADE 0.5% MIN. 10% MAX.

1. SEED AND COVER WITH STRAW MULCH.
2. SEED AND COVER WITH EROSION CONTROL MATTING OR LINE WITH SOD.
3. 4"–7" STONE OR RECYCLED CONCRETE EQUIVALENT PRESSED INTO SOIL IN A MINIMUM 7" LAYER.

CONSTRUCTION SPECIFICATIONS:

1. ALL TEMPORARY SWALES SHALL HAVE UNINTERRUPTED POSITIVE GRADE TO AN OUTLET. SPOT ELEVATIONS MAY BE NECESSARY FOR GRADES LESS THAN 1%.
2. RUNOFF DIVERTED FROM A DISTURBED AREA SHALL BE CONVEYED TO A SEDIMENT TRAPPING DEVICE.
3. RUNOFF DIVERTED FROM AN UNDISTURBED AREA SHALL OUTLET DIRECTLY INTO AN UNDISTURBED STABILIZED AREA AT A NON-EROSIVE VELOCITY.
4. ALL TREES, BRUSH, STUMPS, OBSTRUCTIONS AND OTHER OBJECTIONAL MATERIAL SHALL BE REMOVED AND DISPOSED OF SO AS NOT TO INTERFERE WITH THE PROPER FUNCTIONING OF THE SWALE.
5. THE SWALE SHALL BE EXCAVATED OR SHAPED TO LINE, GRADE AND CROSS SECTION AS REQUIRED TO MEET THE CRITERIA SPECIFIED HEREIN AND BE FREE OF BANK PROJECTIONS OR OTHER IRREGULARITIES WHICH WILL IMPEDE NORMAL FLOW.
6. FILL, IF NECESSARY, SHALL BE COMPACTED BY EARTH MOVING EQUIPMENT.
7. ALL EARTH REMOVED AND NOT NEEDED FOR CONSTRUCTION SHALL BE PLACED SO THAT IT WILL NOT INTERFERE WITH THE FUNCTIONING OF THE SWALE.
8. INSPECTION AND MAINTENANCE MUST BE PROVIDED PERIODICALLY AND AFTER EACH RAIN EVENT.

DATE	APPR.	REFERENCE
REVISED		
ISSUED:		

RECOMMENDED: DEPUTY CHIEF ENGINEER

APPROVED: CHIEF TRANSPORTATION ENGINEER

TEMPORARY SWALE

d. DISTRICT OF COLUMBIA
DEPARTMENT OF TRANSPORTATION

DWG. NO. 628.11

p:\4035\dc standard drawings\final\UNCHANGED\628-11.DGN
Friday, April 03, 2009 AT 12:23 PM

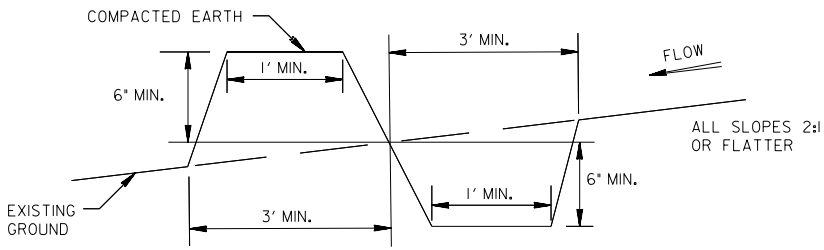

CROSS SECTION

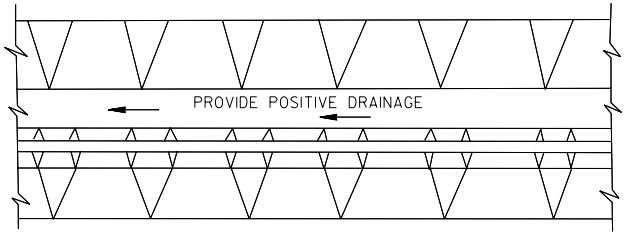

PLAN

MAXIMUM DRAINAGE AREA = 2 ACRES.

STABILIZATION

PD/S-1 SEED AND MULCH (DRAINING ≤ 1 ACRE)
PD/S-2 SEED AND COVER WITH SOIL
STABILIZATION MATTING OR
LINE WITH SOD (DRAINING BETWEEN 1 AND 2 ACRES)

STANDARD SYMBOL

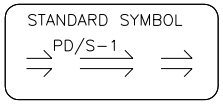

CONSTRUCTION SPECIFICATIONS:

1. ALL PERIMETER DIKES/SWALES SHALL HAVE AN UNINTERRUPTED POSITIVE GRADE TO AN OUTLET. SPOT ELEVATIONS MAY BE NECESSARY FOR GRADES LESS THAN 1%.

2. RUNOFF DIVERTED FROM A DISTURBED AREA SHALL BE CONVEYED TO A SEDIMENT TRAPPING DEVICE.

3. RUNOFF DIVERTED FROM AN UNDISTURBED AREA SHALL OUTLET INTO AN UNDISTURBED STABILIZED AREA AT A NON-EROSIVE VELOCITY.

4. THE SWALE SHALL BE EXCAVATED OR SHAPED TO DIVERT FLOWS AROUND DISTURBED AREAS OR ALONG TOPS OF SLOPE, TO PREVENT FLOWS FROM ERODING THE SLOPE OR ALONG BASE OF SLOPES, AND TO DIRECT SEDIMENT LADEN FLOWS TO A TRAPPING DEVICE.

   THE GRADE SHALL BE DEPENDENT ON TOPOGRAPHY BUT SHALL HAVE POSITIVE DRAINAGE TO AN ADEQUATE OUTLET.

   THE CROSS SECTION IS AS SHOWN.

5. FILL SHALL BE COMPACTED BY EARTH MOVING EQUIPMENT.

6. STABILIZATION, WITH SEED AND MULCH OR AS SPECIFIED, OF THE AREA DISTURBED BY THE DIKE AND SWALE SHALL BE COMPLETED WITHIN 7 DAYS UPON REMOVAL.

7. INSPECTION AND REQUIRED MAINTENANCE SHALL BE PROVIDED AFTER EACH RAIN EVENT.

DATE	APPR.	REFERENCE
REVISED		
ISSUED:		

RECOMMENDED: DEPUTY CHIEF ENGINEER

APPROVED: CHIEF TRANSPORTATION ENGINEER

PERIMETER DIKE / SWALE

d. DISTRICT OF COLUMBIA
DEPARTMENT OF TRANSPORTATION

DWG. NO. 628.12

p:\4035\dc standard drawings\final\UNCHANGED\628-12.DGN
Friday, April 03, 2009 AT 12:23 PM

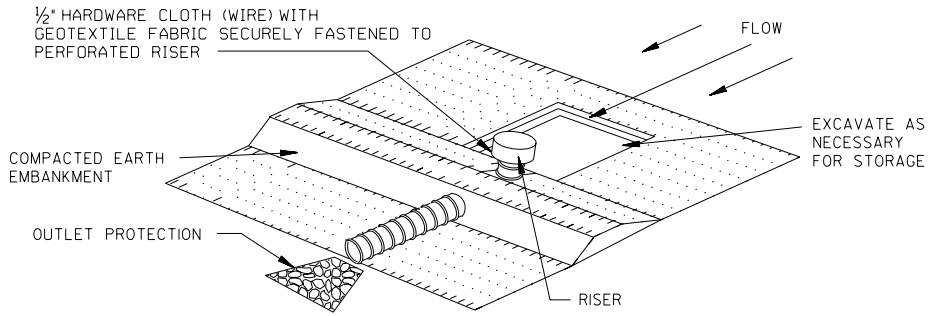

PERSPECTIVE VIEW

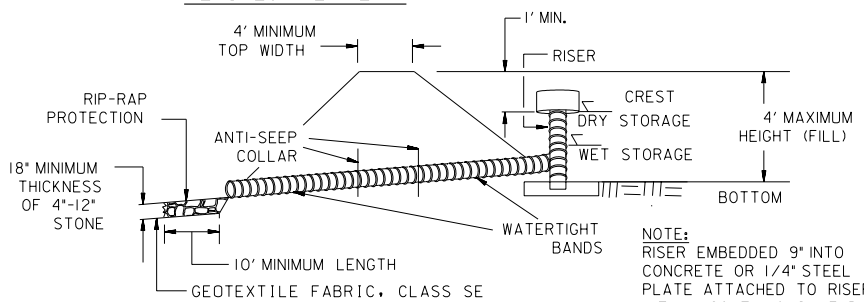

EMBANKMENT SECTION THROUGH RISER

NOTE:
RISER EMBEDDED 9" INTO CONCRETE OR 1/4" STEEL PLATE ATTACHED TO RISER WITH A CONTINUOUS WELD ON BOTTOM AND 2' OF STONE PLACED ON STEEL PLATE TWICE THE RISER DIAMETER (MIN.)

CONSTRUCTION SPECIFICATIONS:

1. THE AREA UNDER THE EMBANKMENT SHALL BE CLEARED, GRUBBED AND STRIPPED OF ANY VEGETATION AND ROOT MAT. THE POOL AREA SHALL BE CLEARED.

2. THE FILL MATERIAL FOR THE EMBANKMENT SHALL BE FREE OF ROOTS OR OTHER WOODY VEGETATION AS WELL AS OVERSIZED STONES, ROCKS, ORGANIC MATERIAL, OR OTHER OBJECTIONABLE MATERIAL. THE EMBANKMENT SHALL BE COMPACTED BY TRAVERSING WITH EQUIPMENT WHILE IT IS BEING CONSTRUCTED.

3. THE TOTAL TRAP VOLUME AS MEASURED FROM THE BOTTOM TO RISER CREST ELEVATION SHALL BE 3600 CUBIC FEET PER ACRE OF DRAINAGE AREA. THE TOP OF EMBANKMENT MUST BE EQUAL TO OR GREATER THAN 1' ABOVE THE RISER CREST ELEVATION.

4. SEDIMENT SHALL BE REMOVED AND THE TRAP RESTORED TO ITS ORIGINAL DIMENSIONS WHEN THE SEDIMENT HAS ACCUMULATED TO ONE HALF OF THE WET STORAGE DEPTH OF THE TRAP (900 CUBIC FEET PER ACRE). THE SEDIMENT SHALL BE DEPOSITED IN A SUITABLE AREA AND IN SUCH A MANNER THAT IT WILL NOT ERODE.

5. THE STRUCTURE SHALL BE INSPECTED PERIODICALLY AND AFTER EACH RAIN AND REPAIRED AS NEEDED.

6. CONSTRUCTION OPERATIONS SHALL BE CARRIED OUT IN SUCH A MANNER THAT EROSION AND WATER POLLUTION ARE ABATED. ONCE CONSTRUCTED, THE TOP AND OUTSIDE FACE OF THE EMBANKMENT SHALL BE STABILIZED WITH SEED AND MULCH. POINTS OF CONCENTRATED INFLOW SHALL BE PROTECTED IN ACCORDANCE WITH GRADE STABILIZATION STRUCTURE CRITERIA. THE REMAINDER OF THE INTERIOR SLOPES SHOULD BE STABILIZED (ONE TIME) WITH SEED AND MULCH UPON TRAP COMPLETION AND MONITORED AND MAINTAINED EROSION FREE DURING THE LIFE OF THE TRAP.

7. THE STRUCTURE SHALL BE REMOVED AND AREA STABILIZED WHEN THE DRAINAGE AREA HAS BEEN PROPERLY STABILIZED.

8. ALL CUT AND FILL SLOPES SHALL BE 2:1 OR FLATTER.

9. ALL PIPE CONNECTIONS SHALL BE WATERTIGHT.

10. ABOVE THE WET STORAGE ELEVATION, THE RISER SHALL BE PERFORATED WITH ½" WIDE BY 6" LONG SLITS OR 1" DIAMETER HOLES SPACED 6" VERTICALLY AND HORIZONTALLY. NO PERFORATIONS WILL BE ALLOWED WITHIN 6" OF THE HORIZONTAL BARREL.

11. THE RISER SHALL BE WRAPPED WITH ½" HARDWARE CLOTH (WIRE) THEN WRAPPED WITH GEOTEXTILE FABRIC. THE GEOTEXTILE FABRIC SHALL EXTEND 6" ABOVE THE HIGHEST SLIT AND 6" BELOW THE LOWEST SLIT. WHERE ENDS OF GEOTEXTILE FABRIC COME TOGETHER, THEY SHALL BE OVERLAPPED, FOLDED AND FASTENED TO PREVENT BYPASS. GEOTEXTILE FABRIC SHALL BE REPLACED AS NECESSARY TO PREVENT CLOGGING.

12. STRAPS OR CONNECTING BANDS SHALL BE USED TO HOLD THE GEOTEXTILE FABRIC AND WIRE FABRIC IN PLACE. THEY SHALL BE PLACED AT THE TOP AND BOTTOM OF THE CLOTH.

13. FILL MATERIAL AROUND THE PIPE SPILLWAY SHALL BE HAND COMPACTED IN 4" LAYERS. A MINIMUM OF 2' OF HAND-COMPACTED BACKFILL SHALL BE PLACED OVER THE PIPE SPILLWAY BEFORE CROSSING IT WITH CONSTRUCTION EQUIPMENT.

14. THE RISER SHALL BE ANCHORED WITH EITHER A CONCRETE BASE OR STEEL PLATE BASE TO PREVENT FLOTATION. CONCRETE BASES SHALL BE AT LEAST TWICE THE RISER DIAMETER AND 12" DEEP WITH THE RISER EMBEDDED 9". STEEL PLATE BASES SHALL BE AT LEAST TWICE THE RISER DIAMETER, ¼" MINIMUM THICKNESS AND ATTACHED TO THE BOTTOM OF THE RISER BY A CONTINUOUS WELD TO FORM A WATERTIGHT CONNECTION. THEN PLACE 2' OF STONE, GRAVEL OR TAMPED EARTH ON THE PLATE.

15. ANTI-SEEP COLLARS SHALL BE CONSTRUCTED IN ACCORDANCE WITH THE CONTRACT PLANS AND DRAWING NO. 628.14.

16. CONCENTRIC TRASH RACK AND ANTI-VORTEX DEVICE DESIGN DETAILS ARE ON DRAWING NO. 628.15.

17. WATER REMOVED FROM THE SEDIMENT TRAP SHALL PASS THROUGH A SEDIMENT CONTROL DEVICE PRIOR TO ENTERING RECEIVING WATERS.

18. OUTLET - AN OUTLET SHALL BE PROVIDED, WHICH INCLUDES A MEANS OF CONVEYING THE DISCHARGE IN AN EROSION FREE MANNER TO AN EXISTING STABLE CHANNEL.

19. WHERE DISCHARGE OCCURS AT THE PROPERTY LINE, LOCAL ORDINANCES AND DRAINAGE EASEMENT REQUIREMENTS SHALL BE MET.

			RECOMMENDED: DEPUTY CHIEF ENGINEER
DATE	APPR.		APPROVED: CHIEF TRANSPORTATION ENGINEER
REVISED			
ISSUED:		REFERENCE	

PIPE OUTLET SEDIMENT TRAP

d. DISTRICT OF COLUMBIA
DEPARTMENT OF TRANSPORTATION

DWG. NO. 628.13

p:\4035\dc standard drawings\final\UNCHANGED\628-13.DGN
Friday, April 03, 2009 AT 12:23 PM

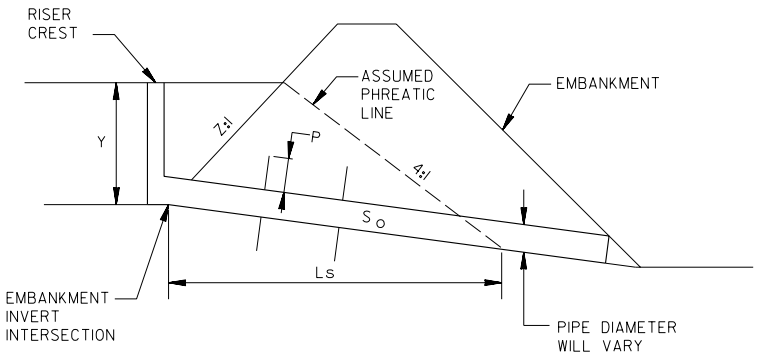

ANTI-SEEP COLLAR DESIGN

WHERE:

P = VERTICAL PROJECTION OF ANTI-SEEP COLLAR (FT.)

Ls = LENGTH OF PIPE IN THE SATURATED ZONE (FT.)

Y = DISTANCE IN FEET FROM UPSTREAM INVERT OF PIPE TO HIGHEST NORMAL WATER LEVEL EXPECTED TO OCCUR DURING THE LIFE OF THE STRUCTURE, USUALLY THE TOP OF THE RISER

Z = SLOPE OF UPSTREAM EMBANKMENT AS A RATIO OF Z FT. HORIZONTAL TO ONE FT. VERTICAL

S_O = SLOPE OF PIPE IN FEET PER FOOT

THIS PROCEDURE IS BASED ON THE PHREATIC LINE AS SHOWN.

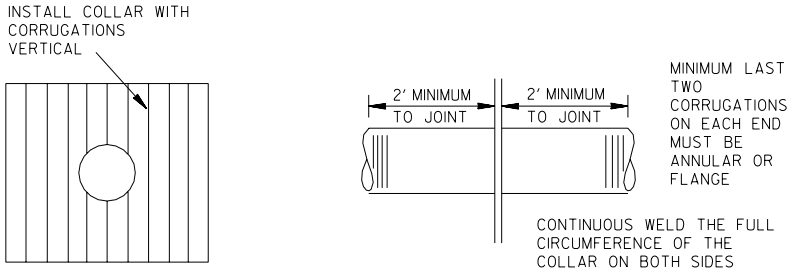

COLLAR WELDED IN PLACE ON BARREL SECTION

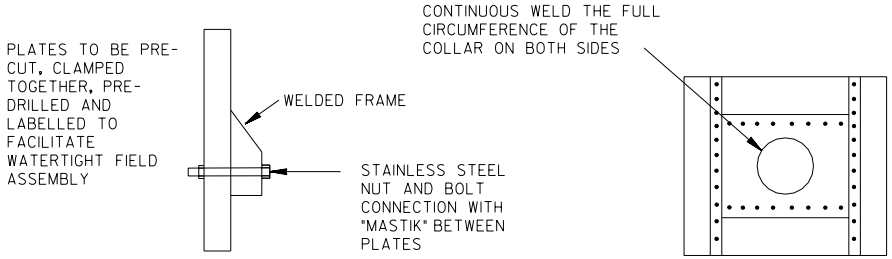

ANTI-SEEP COLLAR DESIGN

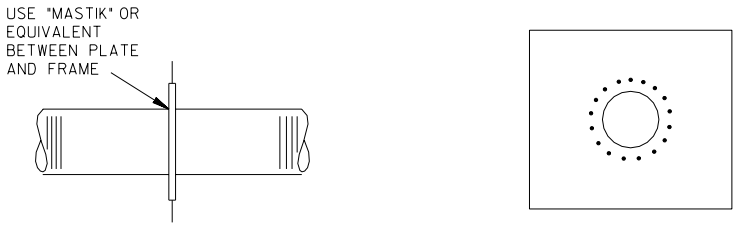

COLLAR FOR FLANGE JOINT PIPE

TYPICAL ANTI-SEEP COLLARS

			RECOMMENDED: DEPUTY CHIEF ENGINEER
DATE	APPR.		APPROVED: CHIEF TRANSPORTATION ENGINEER
REVISED			
ISSUED:		REFERENCE	

ANTI-SEEP COLLAR DESIGN

DISTRICT OF COLUMBIA
DEPARTMENT OF TRANSPORTATION

DWG. NO. 628.14

p:\4035\dc standard drawings\final\UNCHANGED\628-14.DGN
Friday, April 03, 2009 AT 12:23 PM

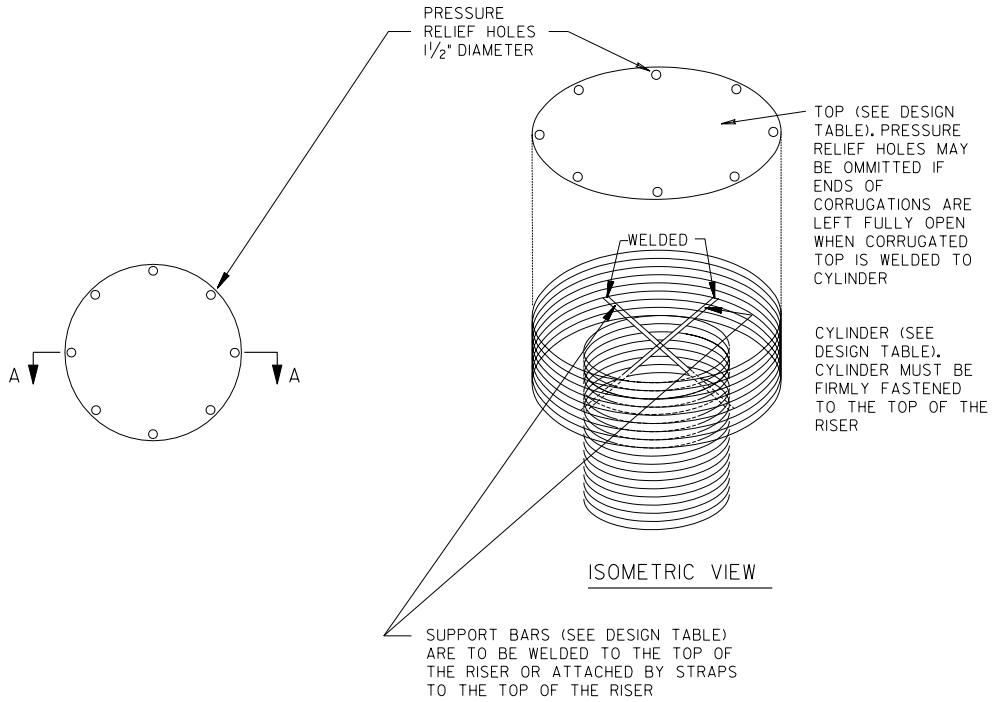

ISOMETRIC VIEW

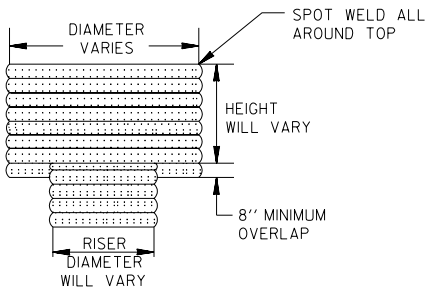

SECTION A-A

DESIGN TABLE

RISER	TRASH RACK CYLINDER			SUPPORT BAR	TOP	
DIAMETER (IN.)	DIAMETER (IN.)	THICKNESS (GAUGE)	HEIGHT (IN.)	MIN. SIZE	MIN. THICKNESS (GAUGE)	STIFFENER
12	18	16	6	# 6 REBAR	16	--
15	21	16	7	# 6 REBAR	16	--
18	27	16	8	# 6 REBAR	16	--
21	30	16	11	# 6 REBAR	16	--
24	36	16	13	# 6 REBAR	14	--

NOTE:

THE ABOVE TRASH RACK AND ANTI-VORTEX DEVICE INFORMATION IS ONLY FOR CORRUGATED METAL PIPE. CONCRETE RISERS SHALL REQUIRE A SPECIAL DESIGN.

DATE	APPR.	REFERENCE
REVISED		
ISSUED:		

RECOMMENDED: DEPUTY CHIEF ENGINEER

APPROVED: CHIEF TRANSPORTATION ENGINEER

CONCENTRIC TRASH RACK AND ANTI-VORTEX DEVICE

DISTRICT OF COLUMBIA
DEPARTMENT OF TRANSPORTATION

DWG. NO. 628.15

p:\4035\dc standard drawings\final\UNCHANGED\628-15.DGN
Friday, April 03, 2009 AT 12:23 PM

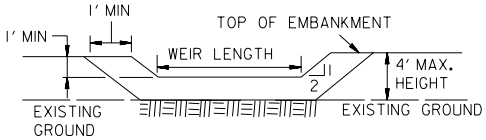

SECTION B-B

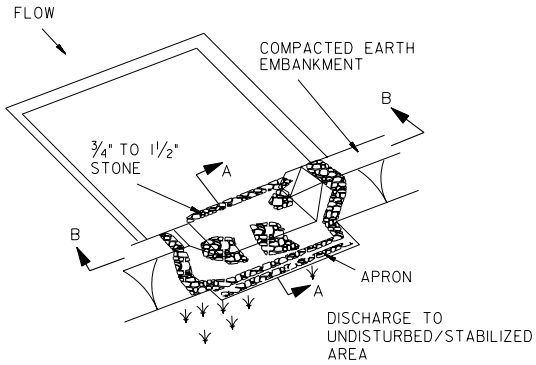

PERSPECTIVE VIEW

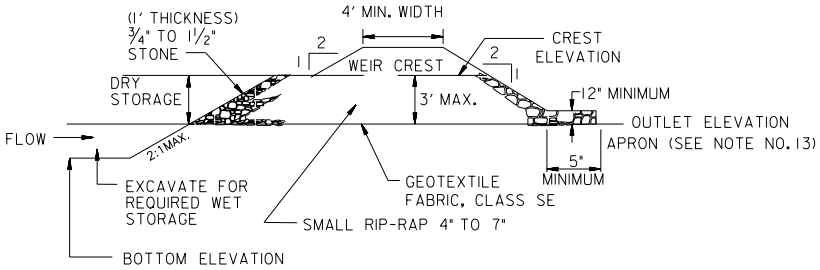

SECTION A-A

NOTE: MAXIMUM DRAINAGE AREA = 5 ACRES

CONSTRUCTION SPECIFICATIONS:

1. AREA UNDER EMBANKMENT SHALL BE CLEARED, GRUBBED AND STRIPPED OF ANY VEGETATION AND ROOT MAT. THE POOL AREA SHALL BE CLEARED.

2. THE FILL MATERIAL FOR THE EMBANKMENT SHALL BE FREE OF ROOTS AND OTHER WOODY VEGETATION AS WELL AS OVER-SIZED STONES, ROCKS, ORGANIC MATERIAL, OR OTHER OBJECTIONABLE MATERIAL. THE EMBANKMENT SHALL BE COMPACTED BY TRAVERSING WITH EQUIPMENT WHILE IT IS BEING CONSTRUCTED.

3. ALL CUT AND FILL SLOPES SHALL BE 2:1 OR FLATTER.

4. THE STONE USED IN THE OUTLET SHALL BE SMALL RIP-RAP 4" TO 7" IN SIZE WITH A 1' THICK LAYER OF 3/4" TO 1 1/2" WASHED AGGREGATE PLACED ON THE UPSTREAM FACE OF THE OUTLET. STONE FACING SHALL BE AS NECESSARY TO PREVENT CLOGGING. GEOTEXTILE FABRIC MAY BE SUBSTITUTED FOR THE STONE FACING BY PLACING IT ON THE INSIDE FACE OF THE STONE OUTLET.

5. SEDIMENT SHALL BE REMOVED AND TRAP RESTORED TO ITS ORIGINAL DIMENSIONS WHEN THE SEDIMENT HAS ACCUMULATED TO ONE HALF OF THE WET STORAGE DEPTH OF THE TRAP. REMOVED SEDIMENT SHALL BE DEPOSITED IN A SUITABLE AREA AND IN SUCH A MANNER THAT IT WILL NOT ERODE.

6. THE STRUCTURE SHALL BE INSPECTED PERIODICALLY AND AFTER EACH RAIN AND REPAIRS MADE AS NEEDED.

7. CONSTRUCTION OF TRAPS SHALL BE CARRIED OUT IN SUCH A MANNER THAT SEDIMENT POLLUTION IS ABATED. ONCE CONSTRUCTED, THE TOP AND OUTSIDE FACE OF THE EMBANKMENT SHALL BE STABILIZED WITH SEED AND MULCH. POINTS OF CONCENTRATION INFLOW SHALL BE PROTECTED IN ACCORDANCE WITH GRADE STABILIZATION STRUCTURE CRITERIA. THE REMAINDER OF THE INTERIOR SLOPES SHOULD BE STABILIZED (ONE TIME) WITH SEED AND MULCH UPON TRAP COMPLETION AND MONITORED AND MAINTAINED EROSION FREE DURING THE LIFE OF THE TRAP.

8. THE STRUCTURE SHALL BE DEWATERED BY APPROVED METHODS, REMOVED AND THE AREA STABILIZED WHEN THE DRAINAGE AREA HAS BEEN PROPERLY STABILIZED.

9. DEWATER TRAP AS SHOWN ON THE PLANS OR IN THE CONTRACT DOCUMENTS.

10. MINIMUM TRAP DEPTH SHALL BE MEASURED FROM THE WEIR ELEVATION.

11. THE ELEVATION OF THE TOP OF ANY DIKE DIRECTING WATER INTO THE TRAP MUST EQUAL OR EXCEED THE ELEVATION OF THE TRAP EMBANKMENT.

12. GEOTEXTILE FABRIC SHALL BE PLACED OVER THE BOTTOM AND SIDES OF THE OUTLET CHANNEL PRIOR TO THE PLACEMENT OF STONE. SECTIONS OF GEOTEXTILE FABRIC MUST OVERLAP AT LEAST 1' WITH THE SECTION NEAREST THE ENTRANCE PLACED ON TOP. THE GEOTEXTILE FABRIC SHALL BE EMBEDDED AT LEAST 6" INTO EXISTING GROUND AT THE ENTRANCE OF THE OUTLET CHANNEL.

13. OUTLET - AN OUTLET SHALL BE PROVIDED, INCLUDING A MEANS OF CONVEYING THE DISCHARGE IN AN EROSION FREE MANNER TO AN EXISTING STABLE CHANNEL.

DATE	APPR.	
REVISED		
ISSUED:		
		REFERENCE

RECOMMENDED: DEPUTY CHIEF ENGINEER

APPROVED: CHIEF TRANSPORTATION ENGINEER

STONE OUTLET SEDIMENT TRAP

d. DISTRICT OF COLUMBIA
DEPARTMENT OF TRANSPORTATION

DWG. NO. 628.16

p:\4035\dc standard drawings\final\UNCHANGED\628-16.DGN
Friday, April 03, 2009 AT 12:23 PM

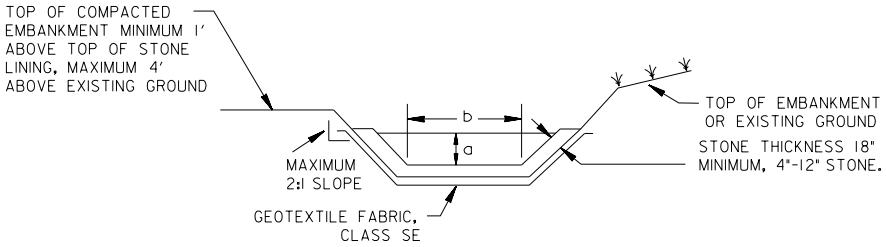

BOTTOM WIDTH OF WEIR (b)
MINIMUM DEPTH OF CHANNEL (a)

CROSS SECTION

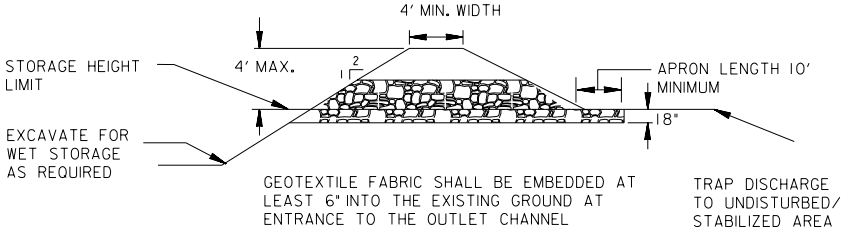

PROFILE

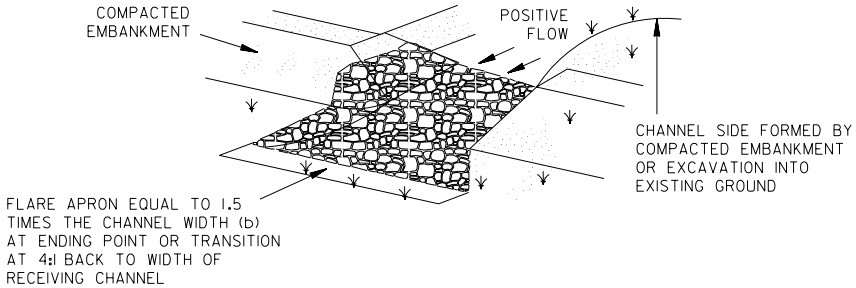

PERSPECTIVE VIEW

NOTE: MAXIMUM DRAINAGE AREA = 10 ACRES

CONSTRUCTION SPECIFICATIONS:

1. THE AREA UNDER EMBANKMENT SHALL BE CLEARED, GRUBBED AND STRIPPED OF ANY VEGETATION AND ROOT MAT. THE POOL AREA SHALL BE CLEARED.
2. THE FILL MATERIAL FOR THE EMBANKMENT SHALL BE FREE OF ROOTS OR OTHER WOODY VEGETATION AS WELL AS OVER-SIZED STONES, ROCKS, ORGANIC MATERIAL OR OTHER OBJECTIONABLE MATERIAL. THE EMBANKMENT SHALL BE COMPACTED BY TRAVERSING WITH EQUIPMENT WHILE IT IS BEING CONSTRUCTED. MAXIMUM HEIGHT OF EMBANKMENT SHALL BE 4', MEASURED AT CENTERLINE OF EMBANKMENT.
3. ALL CUT AND FILL SLOPES SHALL BE 2:1 OR FLATTER.
4. ELEVATION OF THE TOP OF ANY DIKE DIRECTING WATER INTO TRAP MUST EQUAL OR EXCEED THE HEIGHT OF TRAP EMBANKMENT.
5. STORAGE AREA PROVIDED SHALL BE FIGURED BY COMPUTING THE VOLUME MEASURED FROM TOP OF EXCAVATION.
6. GEOTEXTILE FABRIC SHALL BE PLACED OVER THE BOTTOM AND SIDES OF THE OUTLET CHANNEL PRIOR TO PLACEMENT OF STONE. SECTION OF FABRIC MUST OVERLAP AT LEAST 1' WITH SECTION NEAREST THE ENTRANCE PLACED ON TOP. FABRIC SHALL BE EMBEDDED AT LEAST 6" INTO EXISTING GROUND AT ENTRANCE OF OUTLET CHANNEL.
7. STONE USED IN THE OUTLET CHANNEL SHALL BE 4"-12", PLACED 18" THICK.
8. OUTLET - AN OUTLET SHALL BE PROVIDED, WHICH INCLUDES A MEANS OF CONVEYING THE DISCHARGE IN AN EROSION FREE MANNER TO AN EXISTING STABLE CHANNEL. PROTECTION AGAINST SCOUR AT THE DISCHARGE END SHALL BE PROVIDED AS NECESSARY.
9. OUTLET CHANNEL MUST HAVE POSITIVE DRAINAGE FROM THE TRAP.
10. SEDIMENT SHALL BE REMOVED AND TRAP RESTORED TO ITS ORIGINAL DIMENSIONS WHEN THE SEDIMENT HAS ACCUMULATED TO $^1/_4$ OF THE WET STORAGE DEPTH OF THE TRAP (1350 CF/AC). REMOVED SEDIMENT SHALL BE DEPOSITED IN A SUITABLE AREA AND IN SUCH A MANNER THAT IT WILL NOT ERODE.
11. THE STRUCTURE SHALL BE INSPECTED PERIODICALLY AND AFTER EACH RAIN AND REPAIRED AS NEEDED.
12. CONSTRUCTION OF TRAPS SHALL BE CARRIED OUT IN SUCH A MANNER THAT SEDIMENT POLLUTION IS ABATED. ONCE CONSTRUCTED, THE TOP AND OUTSIDE FACE OF THE EMBANKMENT SHALL BE STABILIZED WITH SEED AND MULCH. POINTS OF CONCENTRATED INFLOW SHALL BE PROTECTED IN ACCORDANCE WITH GRADE STABILIZATION STRUCTURE CRITERIA. THE REMAINDER OF THE INTERIOR SLOPES SHOULD BE STABILIZED (ONE TIME) WITH SEED AND MULCH UPON TRAP COMPLETION AND MONITORED AND MAINTAINED EROSION FREE DURING THE LIFE OF THE TRAP.
13. THE STRUCTURE SHALL BE DEWATERED BY APPROVED METHODS, REMOVED AND THE AREA STABILIZED WHEN THE DRAINAGE AREA HAS BEEN PROPERLY STABILIZED.

DATE	APPR.	REFERENCE
REVISED		
ISSUED:		

RECOMMENDED: DEPUTY CHIEF ENGINEER

APPROVED: CHIEF TRANSPORTATION ENGINEER

RIP-RAP OUTLET SEDIMENT TRAP

d. DISTRICT OF COLUMBIA
DEPARTMENT OF TRANSPORTATION

DWG. NO. 628.17

p:\4035\dc standard drawings\final\UNCHANGED\628-17.DGN
Friday, April 03, 2009 AT 12:23 PM

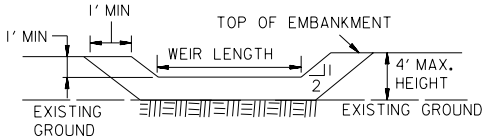

SECTION B-B

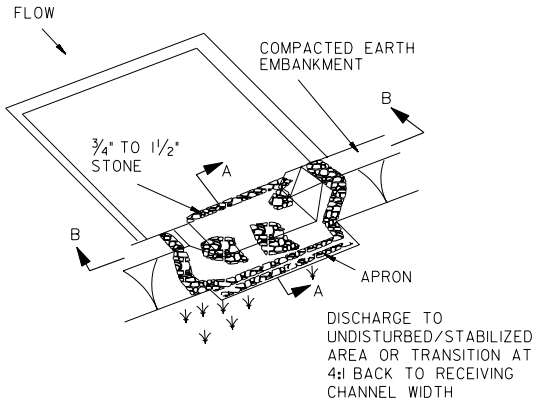

PERSPECTIVE VIEW

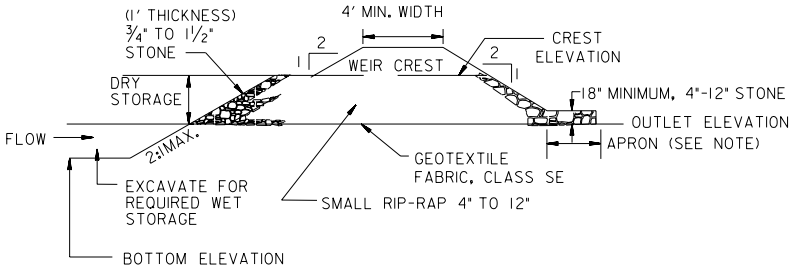

SECTION A-A

NOTE: APRON 5' MIN. LENGTH UP TO 5 ACRES.
USE 10' MIN. LENGTH OVER 5 ACRES.

CONSTRUCTION SPECIFICATIONS:

1. THE AREA UNDER EMBANKMENT SHALL BE CLEARED, GRUBBED AND STRIPPED OF ANY VEGETATION AND ROOT MAT. THE POOL AREA SHALL BE CLEARED.

2. THE FILL MATERIAL FOR THE EMBANKMENT SHALL BE FREE OF ROOTS OR OTHER WOODY VEGETATION AS WELL AS OVER-SIZED STONES, ROCKS, ORGANIC MATERIAL, OR OTHER OBJECTIONABLE MATERIAL. THE EMBANKMENT SHALL BE COMPACTED BY TRAVERSING WITH EQUIPMENT WHILE IT IS BEING CONSTRUCTED. MAXIMUM HEIGHT OF EMBANKMENT SHALL BE 4', MEASURED AT CENTERLINE OF EMBANKMENT.

3. ALL CUT AND FILL SLOPES SHALL BE 2:1 OR FLATTER.

4. ELEVATION OF THE TOP OF ANY DIKE DIRECTING WATER INTO TRAP MUST EQUAL OR EXCEED THE HEIGHT OF TRAP EMBANKMENT.

5. STORAGE AREA PROVIDED SHALL BE FIGURED BY COMPUTING THE VOLUME MEASURED FROM TOP OF WEIR.

6. GEOTEXTILE FABRIC SHALL BE PLACED OVER THE BOTTOM AND SIDES OF THE OUTLET CHANNEL PRIOR TO PLACEMENT OF STONE. SECTION OF GEOTEXTILE FABRIC MUST OVERLAP AT LEAST 1' WITH SECTION NEAREST THE ENTRANCE, PLACED ON TOP. GEOTEXTILE FABRIC SHALL BE EMBEDDED AT LEAST 6" INTO EXISTING GROUND AT ENTRANCE OF OUTLET CHANNEL.

7. 4"-12" STONE SHALL BE USED TO CONSTRUCT THE WEIR, AND 4"-12" STONE OR CLASS I RIP-RAP SHALL BE USED TO CONSTRUCT THE OUTLET CHANNEL.

8. OUTLET - AN OUTLET SHALL INCLUDE A MEANS OF CONVEYING THE DISCHARGE IN AN EROSION FREE MANNER TO AN EXISTING STABLE CHANNEL. PROTECTION AGAINST SCOUR AT THE DISCHARGE POINT SHALL BE PROVIDED AS NECESSARY.

9. OUTLET CHANNEL MUST HAVE POSITIVE DRAINAGE FROM THE TRAP.

10. SEDIMENT SHALL BE REMOVED AND TRAP RESTORED TO ITS ORIGINAL DIMENSIONS WHEN THE SEDIMENT HAS ACCUMULATED TO 1/2 OF THE WET STORAGE DEPTH OF THE TRAP (900 CUBIC FEET PER ACRE). REMOVED SEDIMENT SHALL BE DEPOSITED IN A SUITABLE AREA AND IN SUCH A MANNER THAT IT WILL NOT ERODE.

11. THE STRUCTURE SHALL BE INSPECTED PERIODICALLY AFTER EACH RAIN AND REPAIRED AS NEEDED.

12. CONSTRUCTION OF TRAPS SHALL BE CARRIED OUT IN SUCH A MANNER THAT SEDIMENT POLLUTION IS ABATED. ONCE CONSTRUCTED, THE TOP AND OUTSIDE FACE OF THE EMBANKMENT SHALL BE STABILIZED WITH SEED AND MULCH. POINTS OF CONCENTRATED INFLOW SHALL BE PROTECTED IN ACCORDANCE WITH GRADE STABILIZATION STRUCTURE CRITERIA. THE REMAINDER OF THE INTERIOR SLOPES SHOULD BE STABILIZED (ONE TIME) WITH SEED AND MULCH UPON TRAP COMPLETION AND MONITORED AND MAINTAINED EROSION FREE DURING THE LIFE OF THE TRAP.

13. THE STRUCTURE SHALL BE DEWATERED BY APPROVED METHODS, REMOVED AND THE AREA STABILIZED WHEN THE DRAINAGE AREA HAS BEEN PROPERLY STABILIZED.

DATE	APPR.	REFERENCE
REVISED		
ISSUED:		

RECOMMENDED: DEPUTY CHIEF ENGINEER

APPROVED: CHIEF TRANSPORTATION ENGINEER

STONE / RIP-RAP OUTLET SEDIMENT TRAP

d. DISTRICT OF COLUMBIA
DEPARTMENT OF TRANSPORTATION

DWG. NO. 628.18

p:\4035\dc standard drawings\final\UNCHANGED\628-18.DGN
Friday, April 03, 2009 AT 12:23 PM

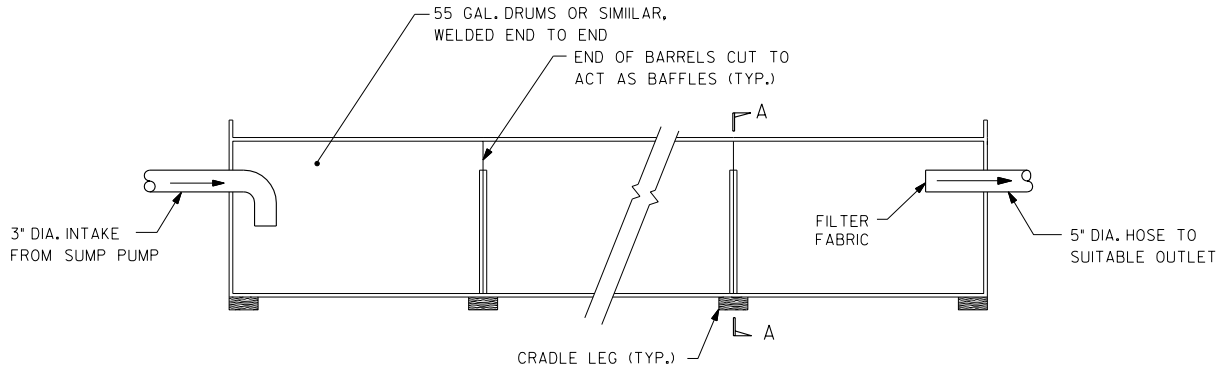

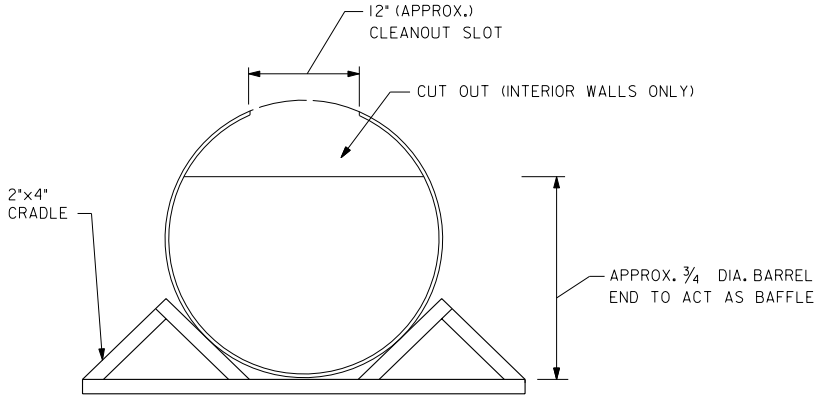

SECTION A-A

CONSTRUCTION SPECIFICATIONS:

1. THE STRUCTURE MAY BE CONSTRUCTED WITH STEEL DRUMS, STURDY WOOD OR OTHER MATERIAL SUITABLE FOR HANDLING THE PRESSURE EXERTED BY THE VOLUME OF WATER.
2. SEDIMENT TANKS WILL HAVE A MINIMUM DEPTH OF 2 FEET.
3. THE SEDIMENT TANK SHALL BE LOCATED FOR EASY CLEAN-OUT AND DISPOSAL OF THE TRAPPED SEDIMENT AND TO MINIMIZE THE INTERFERENCE WITH CONSTRUCTION ACTIVITIES.
4. THE FOLLOWING FORMULA SHALL BE USED TO DETERMINE THE STORAGE VOLUME OF THE SEDIMENT TANK:

   PUMP DISCHARGE (G.P.M.) x 16 = CUBIC FEET OF STORAGE REQUIRED

5. ONCE THE WATER LEVEL NEARS THE TOP OF THE TANK, THE PUMP MUST BE SHUT OFF WHILE THE TANK DRAINS AND ADDITIONAL CAPACITY IS MADE AVAILABLE.
6. THE TANK SHALL BE DESIGNED TO ALLOW FOR EMERGENCY FLOW OVER THE TOP OF THE TANK.
7. CLEAN-OUT OF THE TANK IS REQUIRED ONCE ONE-THIRD OF THE ORIGINAL CAPACITY IS DEPLETED DUE TO SEDIMENT ACCUMULATION. THE TANK SHALL BE CLEARLY MARKED SHOWING THE CLEAN-OUT POINT.

DATE	APPR.	
REVISED		
ISSUED:		
		REFERENCE

RECOMMENDED: DEPUTY CHIEF ENGINEER

APPROVED: CHIEF TRANSPORTATION ENGINEER

PORTABLE SEDIMENT TANK

d. DISTRICT OF COLUMBIA
DEPARTMENT OF TRANSPORTATION

DWG. NO. 628.19

p:\4035\dc standard drawings\final\UNCHANGED\628-19.DGN
Friday, April 03, 2009 AT 12:23 PM