Standard Drawings

DC STREETCAR

January 2012

d.
District Department of Transportation

GENERAL

CS-01	COVER SHEET
I-01	INDEX OF DRAWINGS

CIVIL

C-01	STREETCAR TYPICAL PAVEMENT MARKING WITH DEDICATED BIKE LANE
C-02	STREETCAR TYPICAL TRAFFIC SIGNING WITH DEDICATED BIKE LANE
C-03	STREETCAR TYPICAL PAVEMENT MARKING WITH SHARED BIKE LANE (2 TRAVEL LANES)
C-04	STREETCAR TYPICAL TRAFFIC SIGNING WITH SHARED BIKE LANE (2 TRAVEL LANES)
C-05	STREETCAR TYPICAL PAVEMENT MARKING WITH SHARED BIKE LANE (3 TRAVEL LANES)
C-06	STREETCAR TYPICAL TRAFFIC SIGNING WITH SHARED BIKE LANE (3 TRAVEL LANES)

TRACK

T-01	STANDARD TRACK SYMBOLS, ABBREVIATIONS & GENERAL NOTES
T-02	HORIZONTAL CURVES
T-03	RAIL SECTION DETAILS
T-04	EMBEDDED TRACK SLAB DETAILS
T-05	20 METER CURVED TURNOUT DETAIL
T-06	25 METER CURVED EMBEDDED TURNOUT DETAIL
T-07	25 METER STRAIGHT TURNOUT DETAIL
T-08	TRACKWORK TURNOUT TUB DETAILS (SHEET 1 OF 2)
T-09	TRACKWORK TURNOUT TUB DETAILS (SHEET 2 OF 2)
T-10	TRACK DRAIN DETAILS
T-11	TRACKWORK RESTRAINING RAIL DETAILS
T-12	UTILITY IMPACT ZONES

ARCHITECTURAL

A-01	PROTOTYPE PLATFORM CURB EXTENSION A
A-02	PROTOTYPE PLATFORM CURB EXTENSION B
A-03	PROTOTYPE PLATFORM TWO SIDE CURBS
A-04	PROTOTYPE PLATFORM CENTER MEDIAN
A-05	PROTOTYPE PLATFORM SPLIT MEDIAN
A-06	PLATFORM TRANSITION CONDITIONS
A-07	STREETCAR PLATFORM EDGE DETAILS
A-08	STREETCAR PLATFORM FURNISHINGS LEANING RAIL PLANS, ELEVATIONS, AND SECTIONS
A-09	STREETCAR PLATFORM LEANING RAIL FOUNDATION AND CURB DETAILS
A-10	STREETCAR PYLON PLANS AND ELEVATION
A-11	STREETCAR PYLON DETAILS

SYSTEMS

E-01	LOW VOLTAGE SUBSTATION TYPICAL LAYOUT AND GROUNDING PLAN
E-02	SYSTEMWIDE ELECTRICAL - TYPICAL MANHOLE INSTALLATION
E-03	SYSTEMWIDE ELECTRICAL - CONDUIT INSTALLATION DETAILS
E-04	SYSTEMWIDE ELECTRICAL - NEGATIVE CONNECTION TO RAIL
E-05	TRAIN TO WAYSIDE COMMUNICATION - INSTALLATION DETAILS
OCT-01	GENERAL NOTES FOR OCS DRAWINGS
OCT-02	ABBREVIATIONS USED ON OCS DRAWINGS
OCT-03	VERTICAL ELECTRICAL CLEARANCE FOR NON-OCS WIRES
OCT-04	VERTICAL ELECTRICAL CLEARANCE REQUIREMENTS
OCT-05	SUMMARY OF DESIGN CRITERIA, TOLERANCE, AND WIRE HEIGHTS
OCT-06	PANTOGRAPH COLLECTOR OUTLINE
OCT-07	SIMPLIFIED PANTOGRAPH CLEARANCE
OCT-08	PANTOGRAPH CLEARANCE TO GROUND ITEMS AND DIFFERENT ELECTRICAL CIRCUITS
OCT-09	PANTOGRAPH CLEARANCE TO LIVE OCS FITTINGS
OCT-10	STEADY ARM CLEARANCES AND DIMENSIONS
OCT-11	CONDUCTOR PARTICULARS
OCT-12	AUTO AND FIXED - TENSIONED SINGLE CONTACT WIRE SPAN LENGTH CHART
OCT-13	AUTO - TENSIONED SINGLE CONTACT WIRE - ALONG TRACK MOVEMENT AND STAGGER CHANGE
OCT-14	AUTO - TENSIONED SINGLE CONTACT WIRE RADIAL AND WIND LOADS
OCT-15	FIXED - TENSIONED SINGLE CONTACT WIRE RADIAL AND WIND LOADS
OCT-16	SWAT AND SWFT ERECTION TENSIONS
OCP-01	SAMPLE OCS WIRING LAYOUT PLAN
OCP-02	SAMPLE POLE AND FOUNDATION SCHEDULE
OCP-03	SAMPLE ACCEPTANCE MEASUREMENT REQUIREMENTS
OCD-01	TYPICAL CANTILEVER AND SUPPORTED PULL-OFF STRUCTURES - SWAT
OCD-02	TYPICAL HEADSPAN STRUCTURE - SWAT
OCD-03	TYPICAL CROSS SPAN STRUCTURE - SWAT
OCD-04	TYPICAL FEEDER STRUCTURES WITH DISCONNECT SWITCH
OCD-05	TYPICAL SECTION INSULATOR SUSPENSION STRUCTURE - SWAT
OCD-06	MIDPOINT ANCHORS
OCD-07	INSULATED OVERLAP ON HEADSPAN SUPPORT STRUCTURES
OCD-08	INSULATED OVERLAP ON CANTILEVER SUPPORT STRUCTURES
OCD-09	BRACKET ASSEMBLIES FOR TUBULAR POLES - TYPES BA, BB, BC, BD, BE, AND BH

SYSTEMS CONTINUED

OCD-10	SINGLE CONTACT WIRE LIGHT/MEDIUM PUSH-OFF AND PULL-OFF, CANTILEVER ASSEMBLIES CA-01L/M AND CA-02L/M
OCD-11	SINGLE CONTACT WIRE HEAVY PUSH-OFF AND PULL-OFF, CANTILEVER ASSEMBLIES CA-01H AND CA-02H
OCD-12	SINGLE CONTACT WIRE INSULATOR SUPPORT, CANTILEVER ASSEMBLY CA-03
OCD-13	SINGLE CONTACT WIRE OUT-OF-RUNNING, CANTILEVER ASSEMBLY CA-04
OCD-14	SINGLE CONTACT WIRE TWO TRACK CANTILEVER ASSEMBLY CA-05
OCD-15	SINGLE CONTACT WIRE PUSH AND PULL CANTILEVER ATTACHED TO BALANCE WEIGHT POLE CA-06 AND CA-07
OCD-16	BRIDLE WIRE ASSEMBLIES, TYPES BD-1, BD-2, AND BD-3
OCD-17	MEDIUM AND HEAVY PULL OFF ASSEMBLIES, POP-1M, POP-2M, AND POP-3H
OCD-18	HEADSPAN AND CROSS SPAN SUPPORT ASSEMBLIES - TYPE HS-1
OCD-19	HEADSPAN REGISRATION ASSEMBLIES - TYPE HR
OCD-20	MIDPOINT GUY ASSEMBLY - TYPE MP-1
OCD-21	BALANCE WEIGHT ANCHOR ASSEMBLY - TYPE BW-01
OCD-22	FIXED TERMINATION ASSEMBLE - TYPE FA-1
OCD-23	JUMPER ASSEMBLY - TYPE JC, CROSS CONTACT ASSEMBLY - TYPE CC
OCD-24	SECTION INSULATOR ASSEMBLY - TYPE SI
OCD-25	CUT-IN INSULATION ASSEMBLIES AND SPLICE TYPES - IN2C, IN2G, IN3, AND SP1
OCD-26	POLE MOUNTED DISCONNECT SWITCH ASSEMBLY - TYPE DS-21 AND DS-22
OCD-27	SURGE ARRESTER ASSEMBLY - TYPE SA
OCD-28	FOUNDATION AND POLE GROUND CONNECTION ASSEMBLY - TYPE PG
OCD-29	SHOP DOOR BRIDGE ASSEMBLY - TYPE SD-1
OCD-30	SHOP DOOR WIRE TERMINATION ASSEMBLIES - TYPE SY-1 AND SY-2
OCD-31	TYPICAL SHOP DOOR WIRE TERMINATION BRACKETS
OCD-32	TAPERED TUBULAR POLE ASSEMBLIES - TYPE PS AND PF
OCD-33	TAPERED TUBULAR FEEDER POLE ASSEMBLY TYPE PF
OCD-34	TUBULAR BALANCE WEIGHT ANCHOR POLE ASSEMBLY TYPES PB4

NOTE:

THESE STANDARD DRAWINGS ARE NOT INTENDED TO BE UTILIZED IN EVERY CASE. ALTERNATIVE DESIGNS SHALL BE CREATED TO ACCOMMODATE SPECIFIC PROJECT REQUIREMENTS AS APPROVED BY DDOT.

DATE	APPR.	
REVISED		
ISSUED:		REFERENCE

RECOMMENDED: Mohammad Khalil
DEPUTY CHIEF ENGINEER

APPROVED:
CHIEF TRANSPORTATION ENGINEER

D.C. DEPARTMENT OF TRANSPORTATION

STREETCAR STANDARD DRAWINGS

INDEX OF DRAWINGS

PROJECT ENG.
DESIGNED BY
CHECKED BY
DRAWN BY
PROJECT MGR. CV

DIVISION CHIEF
DATE
FILE
DWG. NO. I-01

c:\pwworking\plit\d0498355\S_G-01.dgn
12/3/2012

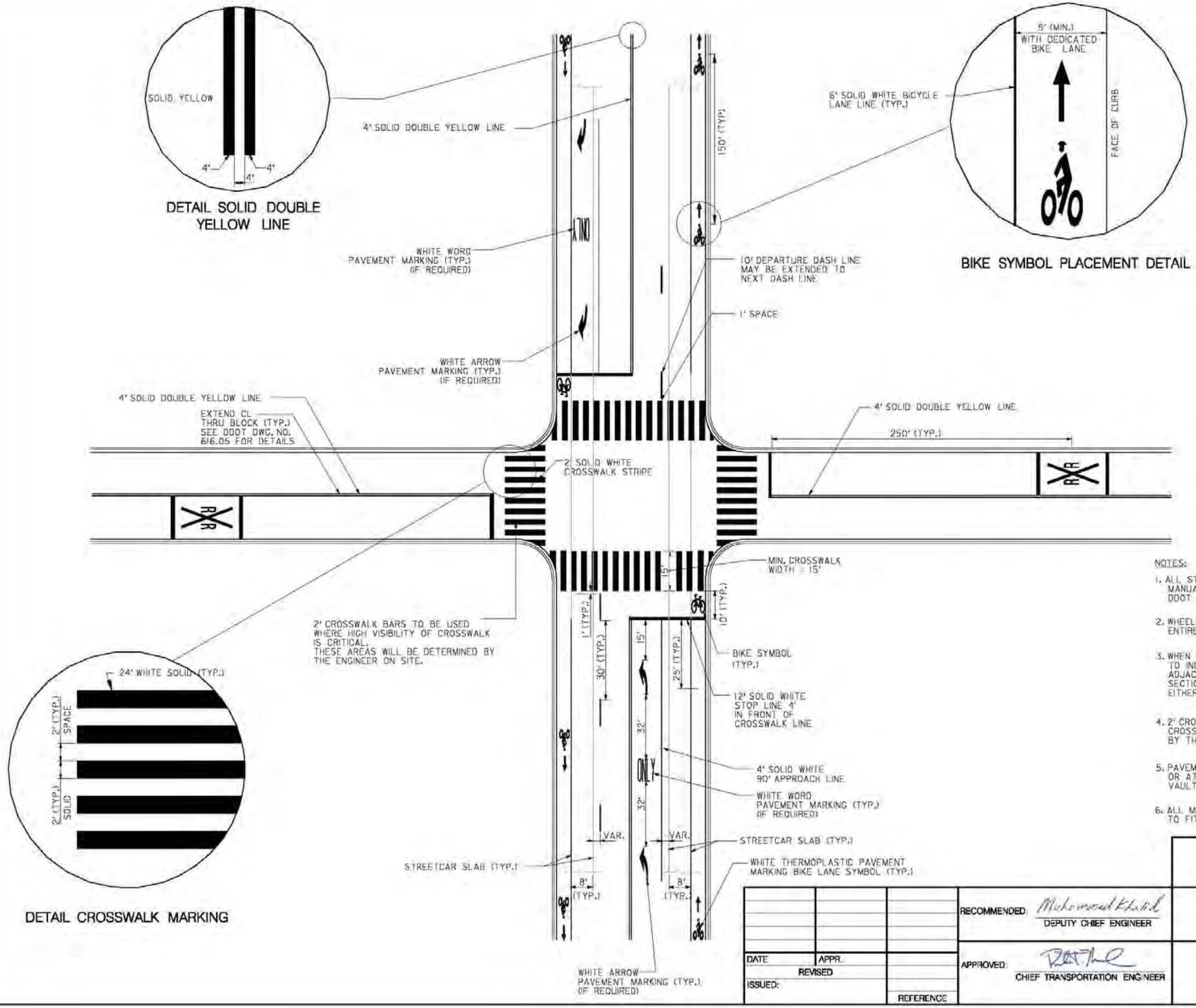

NOTES:

1. ALL STRIPING WORK AND SIGNS SHALL MEET ALL APPLICABLE MANUAL ON UNIFORM TRAFFIC CONTROL DEVICES (MUTCD) AND DDOT STANDARDS AND SPECIFICATIONS.
2. WHEELCHAIR RAMPS (NOT SHOWN FOR CLARITY) MUST BE LOCATED ENTIRELY WITHIN CROSSWALK.
3. WHEN DIRECTED BY THE ENGINEER, PARKING "L" SHALL BE PLACED TO INDICATE THE END OF THE PARKING SPACES; SPECIFICALLY ADJACENT TO PARKING RESTRICTION SIGNS NEAR STREET INTERSECTIONS, 10 FT. ON EITHER SIDE OF FIRE HYDRANTS AND 5 FT. ON EITHER SIDE OF DRIVEWAY AND/OR ALLEY ENTRANCES.
4. 2' CROSSWALK LINES TO BE USED WHERE HIGH VISIBILITY OF CROSSWALK IS CRITICAL. THESE AREAS WILL BE DETERMINED BY THE TRAFFIC ENGINEER ON SITE.
5. PAVEMENT MARKINGS SHALL NOT BE APPLIED IN THE GUTTER AREA OR ATOP SURFACE STRUCTURES SUCH AS MANHOLE COVERS, VALVES VAULTS, ETC.
6. ALL MARKINGS BETWEEN THE STREET CAR TRACKS MUST BE ADJUSTED TO FIT.

DATE	APPR.		RECOMMENDED: Muhammad Khalid DEPUTY CHIEF ENGINEER	D.C. DEPARTMENT OF TRANSPORTATION
REVISED				STREETCAR STANDARD DRAWINGS
ISSUED:		REFERENCE	APPROVED: CHIEF TRANSPORTATION ENGINEER	STREETCAR TYPICAL PAVEMENT MARKING WITH DEDICATED BIKE LANE (2 TRAVEL LANES) N.T.S.

PROJECT ENG.
DESIGNED BY
CHECKED BY
DRAWN BY
PROJECT MGR. CV
DIVISION CHIEF
DATE
FILE
DWG. NO. C-01

$FILE$
$DATE$

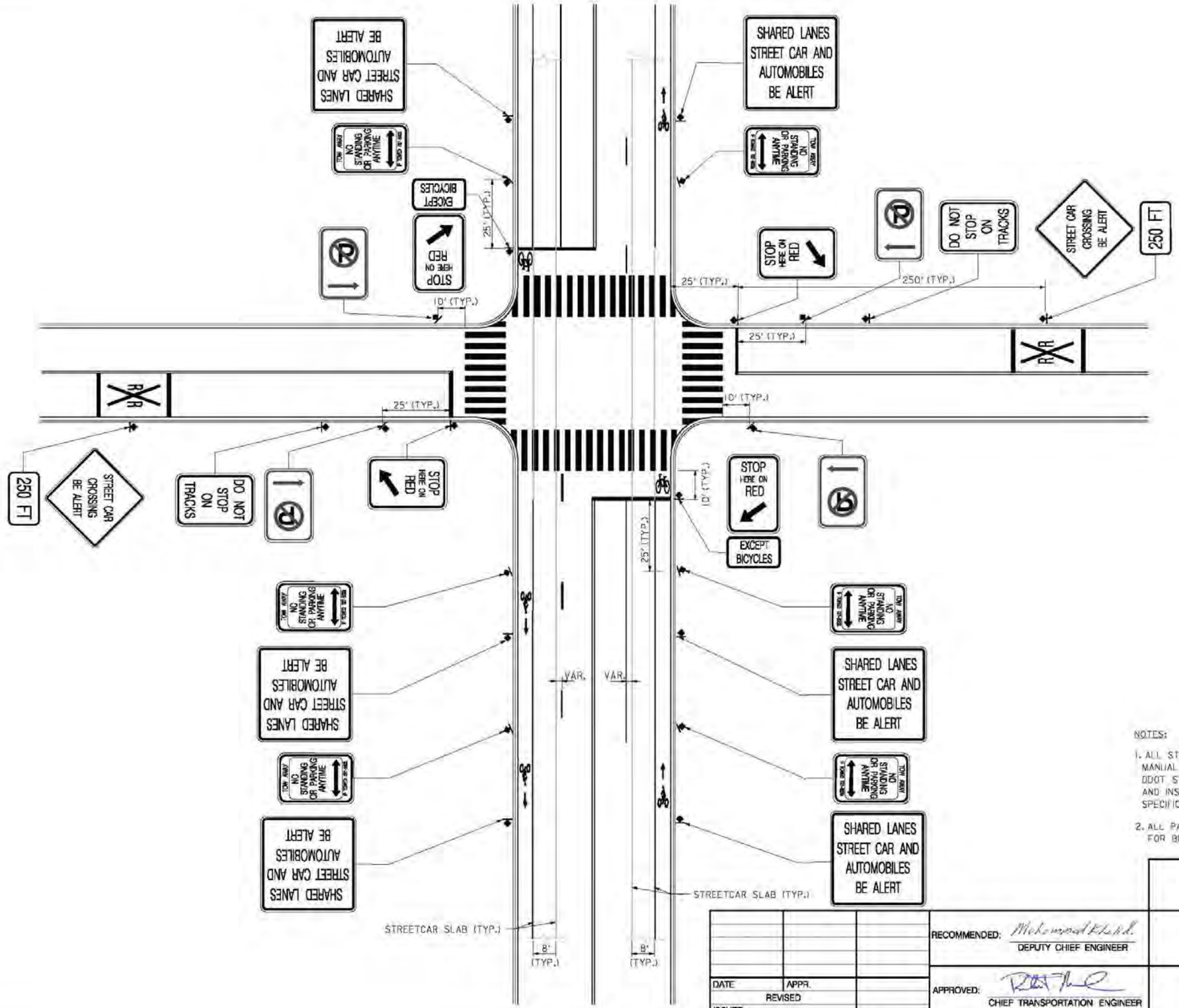

NOTES:

1. ALL STREETCAR TRAFFIC SIGNS SHALL MEET ALL APPLICABLE MANUAL ON UNIFORM TRAFFIC CONTROL DEVICES (MUTCD) AND DDOT STANDARDS AND SPECIFICATIONS. SIGNS SHALL BE FABRICATED AND INSTALLED IN ACCORDANCE WITH DDOT STANDARDS AND SPECIFICATIONS.
2. ALL PARKING RESTRICTION SIGNS SHALL BE ANGLED @ 45 DEGREES FOR BETTER VISIBILITY.

D.C. DEPARTMENT OF TRANSPORTATION

DATE	APPR.		
REVISED			
ISSUED:		REFERENCE	

RECOMMENDED: Mohammad Khalil
DEPUTY CHIEF ENGINEER

APPROVED:
CHIEF TRANSPORTATION ENGINEER

STREETCAR STANDARD DRAWINGS

STREETCAR TYPICAL TRAFFIC SIGNING WITH DEDICATED BIKE LANE (2 TRAVEL LANES)
N.T.S.

PROJECT ENG.
DESIGNED BY
CHECKED BY
DRAWN BY
PROJECT MGR. CV

DIVISION CHIEF
DATE
FILE
DWG. NO. C-401

#FILE#
#DATE#

DETAIL SOLID DOUBLE YELLOW LINE

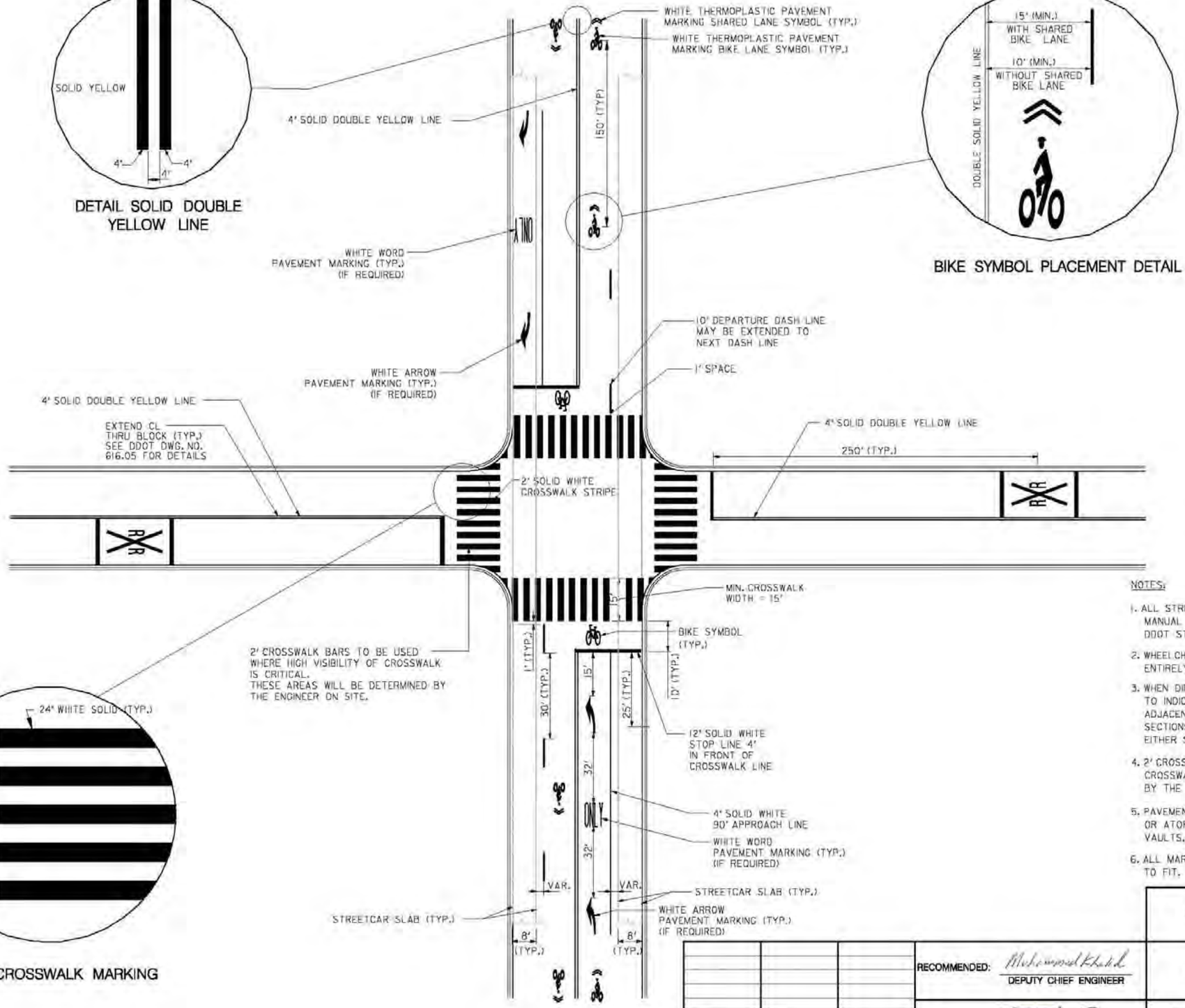

BIKE SYMBOL PLACEMENT DETAIL

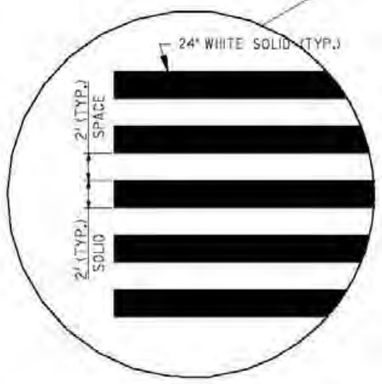

DETAIL CROSSWALK MARKING

NOTES:

1. ALL STRIPING WORK AND SIGNS SHALL MEET ALL APPLICABLE MANUAL ON UNIFORM TRAFFIC CONTROL DEVICES (MUTCD) AND DDOT STANDARDS AND SPECIFICATIONS.
2. WHEELCHAIR RAMPS (NOT SHOWN FOR CLARITY) MUST BE LOCATED ENTIRELY WITHIN CROSSWALK.
3. WHEN DIRECTED BY THE ENGINEER, PARKING 'L' SHALL BE PLACED TO INDICATE THE END OF THE PARKING SPACES; SPECIFICALLY ADJACENT TO PARKING RESTRICTION SIGNS NEAR STREET INTERSECTIONS, 10 FT. ON EITHER SIDE OF FIRE HYDRANTS AND 5 FT. ON EITHER SIDE OF DRIVEWAY AND/OR ALLEY ENTRANCES.
4. 2' CROSSWALK LINES TO BE USED WHERE HIGH VISIBILITY OF CROSSWALK IS CRITICAL. THESE AREAS WILL BE DETERMINED BY THE TRAFFIC ENGINEER ON SITE.
5. PAVEMENT MARKINGS SHALL NOT BE APPLIED IN THE GUTTER AREA OR ATOP SURFACE STRUCTURES SUCH AS MANHOLE COVERS, VALVES VAULTS, ETC.
6. ALL MARKINGS BETWEEN THE STREET CAR TRACKS MUST BE ADJUSTED TO FIT.

DATE	APPR.	
REVISED		
ISSUED:		REFERENCE

RECOMMENDED: _____ DEPUTY CHIEF ENGINEER

APPROVED: _____ CHIEF TRANSPORTATION ENGINEER

D.C. DEPARTMENT OF TRANSPORTATION

STREETCAR STANDARD DRAWINGS

PROJECT ENG. ____
DESIGNED BY ____
CHECKED BY ____
DRAWN BY ____
PROJECT MGR. CV

STREETCAR TYPICAL PAVEMENT MARKING WITH SHARED BIKE LANE (2 TRAVEL LANES)

N.T.S.

DIVISION CHIEF
DATE ____
FILE ____
DWG. NO. D-03

#FILE# #DATE#

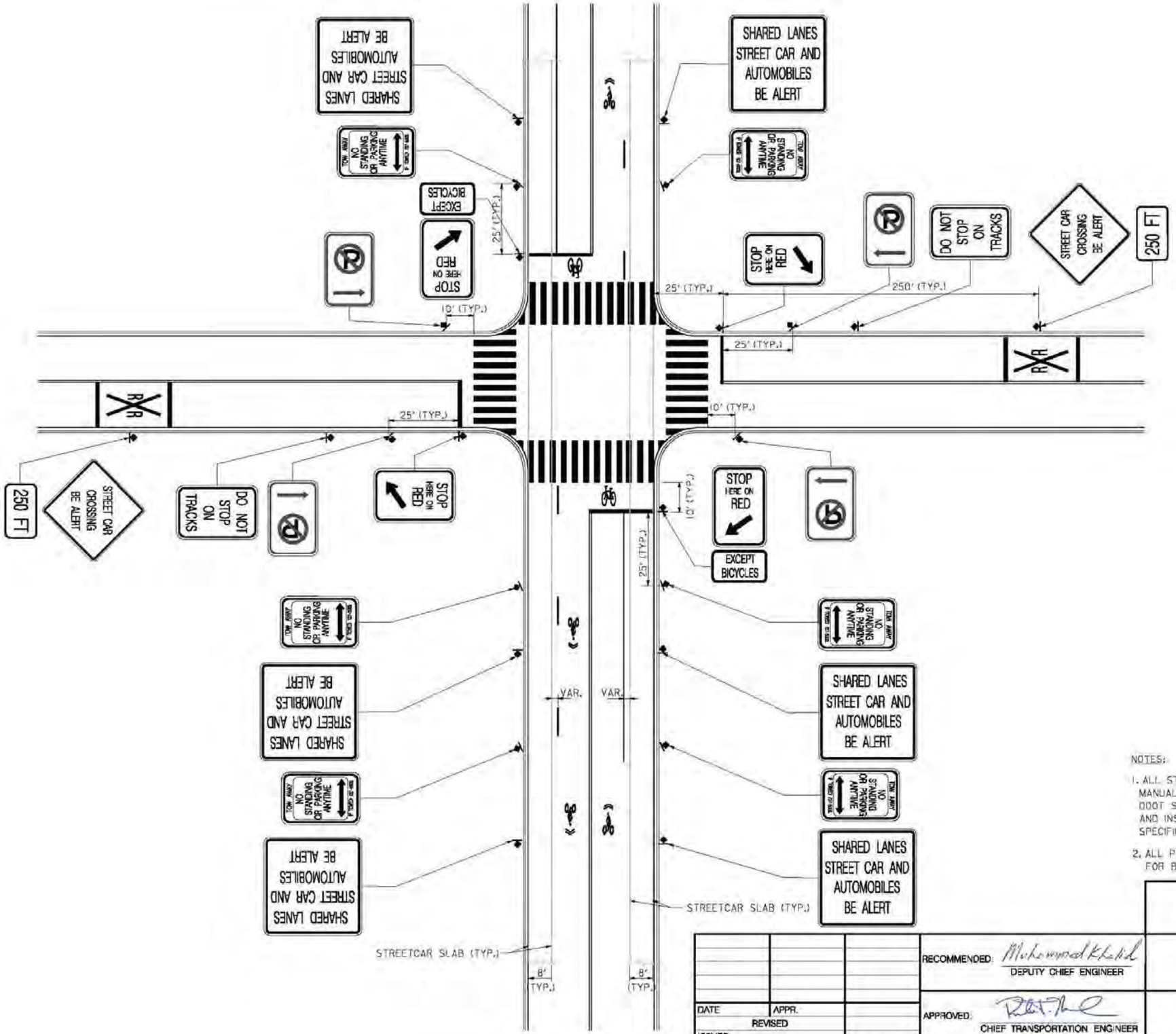

NOTES:

1. ALL STREETCAR TRAFFIC SIGNS SHALL MEET ALL APPLICABLE MANUAL ON UNIFORM TRAFFIC CONTROL DEVICES (MUTCD) AND DDOT STANDARDS AND SPECIFICATIONS. SIGNS SHALL BE FABRICATED AND INSTALLED IN ACCORDANCE WITH DDOT STANDARDS AND SPECIFICATIONS.
2. ALL PARKING RESTRICTION SIGNS SHALL BE ANGLED @ 45 DEGREES FOR BETTER VISIBILITY.

D.C. DEPARTMENT OF TRANSPORTATION

DATE	APPR.		RECOMMENDED: Mohammad Khalid, DEPUTY CHIEF ENGINEER
REVISED			
ISSUED:		REFERENCE	APPROVED: CHIEF TRANSPORTATION ENGINEER

STREETCAR STANDARD DRAWINGS

STREETCAR TYPICAL TRAFFIC SIGNING WITH SHARED BIKE LANE (2 TRAVEL LANES)
N.T.S.

PROJECT ENG.
DESIGNED BY
CHECKED BY
DRAWN BY
PROJECT MGR. CV
DIVISION CHIEF
DATE
FILE
DWG NO. D-04

#FILE#
#DATE#

DETAIL SOLID DOUBLE YELLOW LINE

BIKE SYMBOL PLACEMENT DETAIL

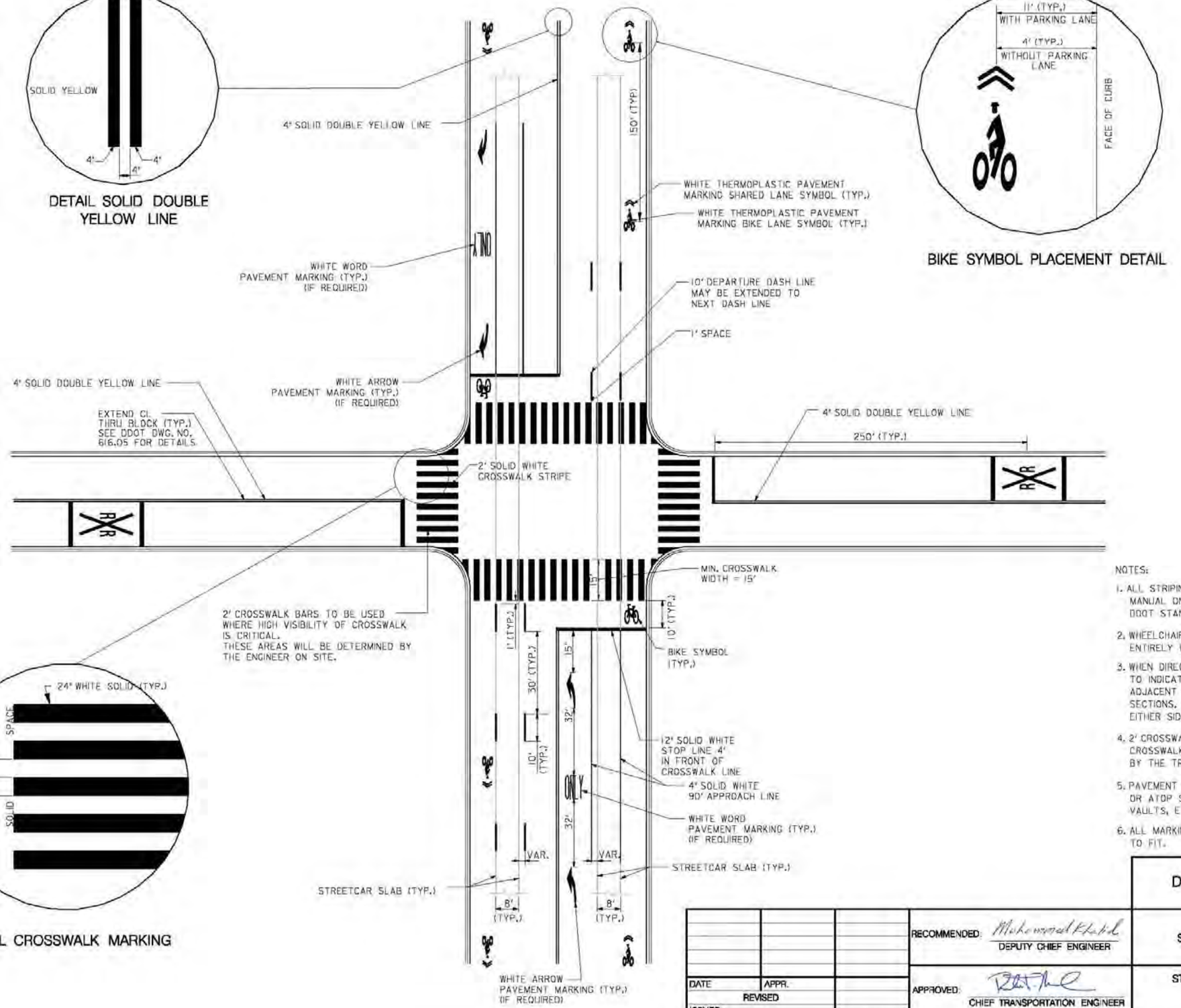

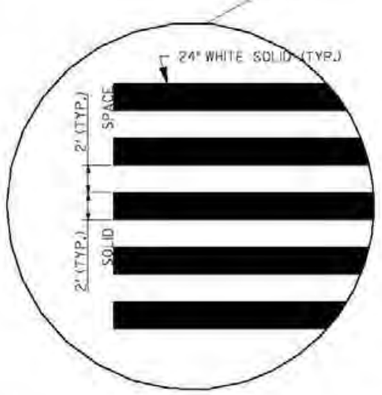

DETAIL CROSSWALK MARKING

NOTES:

1. ALL STRIPING WORK AND SIGNS SHALL MEET ALL APPLICABLE MANUAL ON UNIFORM TRAFFIC CONTROL DEVICES (MUTCD) AND DDOT STANDARDS AND SPECIFICATIONS.
2. WHEELCHAIR RAMPS (NOT SHOWN FOR CLARITY) MUST BE LOCATED ENTIRELY WITHIN CROSSWALK.
3. WHEN DIRECTED BY THE ENGINEER, PARKING "L" SHALL BE PLACED TO INDICATE THE END OF THE PARKING SPACES; SPECIFICALLY ADJACENT TO PARKING RESTRICTION SIGNS NEAR STREET INTERSECTIONS, 10 FT. ON EITHER SIDE OF FIRE HYDRANTS AND 5 FT. ON EITHER SIDE OF DRIVEWAY AND/OR ALLEY ENTRANCES.
4. 2' CROSSWALK LINES TO BE USED WHERE HIGH VISIBILITY OF CROSSWALK IS CRITICAL. THESE AREAS WILL BE DETERMINED BY THE TRAFFIC ENGINEER ON SITE.
5. PAVEMENT MARKINGS SHALL NOT BE APPLIED IN THE GUTTER AREA OR ATOP SURFACE STRUCTURES SUCH AS MANHOLE COVERS, VALVES VAULTS, ETC.
6. ALL MARKINGS BETWEEN THE STREET CAR TRACKS MUST BE ADJUSTED TO FIT.

			RECOMMENDED: Mohammad Khalil — DEPUTY CHIEF ENGINEER
DATE	APPR.		APPROVED: — CHIEF TRANSPORTATION ENGINEER
REVISED			
ISSUED:		REFERENCE	

D.C. DEPARTMENT OF TRANSPORTATION

STREETCAR STANDARD DRAWINGS

STREETCAR TYPICAL PAVEMENT MARKING WITH SHARED BIKE LANE (3 TRAVEL LANES)

N.T.S.

PROJECT ENG. ____
DESIGNED BY ____
CHECKED BY ____
DRAWN BY ____
PROJECT MGR. CV

DIVISION CHIEF
DATE ____
FILE ____
DWG NO. C-05

FILES
UDATE

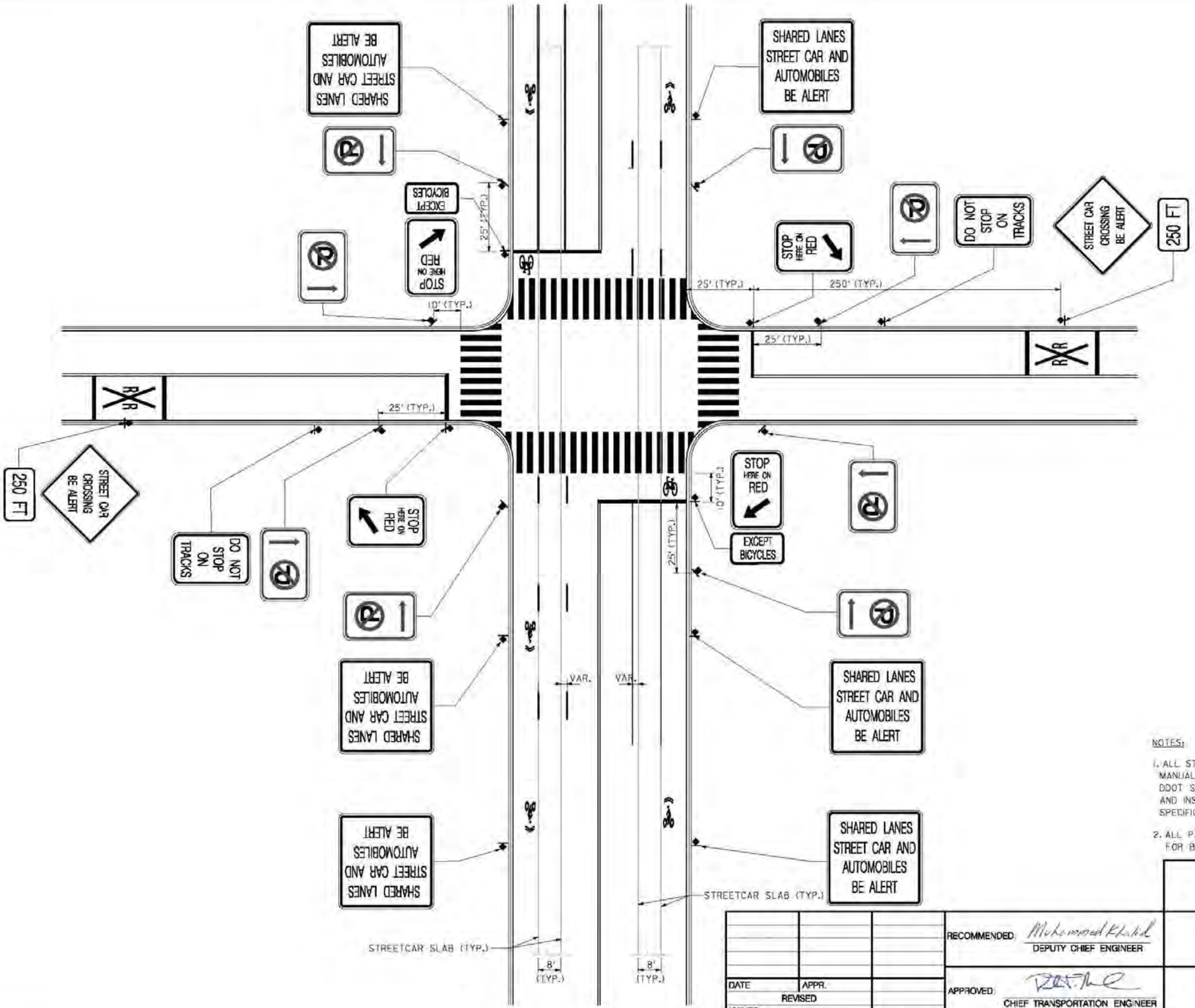

NOTES:

1. ALL STREETCAR TRAFFIC SIGNS SHALL MEET ALL APPLICABLE MANUAL ON UNIFORM TRAFFIC CONTROL DEVICES (MUTCD) AND DDOT STANDARDS AND SPECIFICATIONS. SIGNS SHALL BE FABRICATED AND INSTALLED IN ACCORDANCE WITH DDOT STANDARDS AND SPECIFICATIONS.
2. ALL PARKING RESTRICTION SIGNS SHALL BE ANGLED @ 45 DEGREES FOR BETTER VISIBILITY.

			RECOMMENDED: Mohammad Khalid, DEPUTY CHIEF ENGINEER	D.C. DEPARTMENT OF TRANSPORTATION
				STREETCAR STANDARD DRAWINGS
DATE	APPR.		APPROVED: CHIEF TRANSPORTATION ENGINEER	STREETCAR TYPICAL TRAFFIC SIGNING WITH SHARED BIKE LANE (3 TRAVEL LANES) N.T.S.
REVISED				
ISSUED:		REFERENCE		

PROJECT ENG.
DESIGNED BY
CHECKED BY
DRAWN BY
PROJECT MGR. DV
DIVISION CHIEF
DATE
FILE
DWG NO. C-03

$FILE$
$DATE$

TRACK PLANS

- PAVEMENT RECONSTRUCTION
- PAVEMENT MILL & OVERLAY
- SIDEWALK RECONSTRUCTION
- RESET EXISTING PAVERS
- (200) TURNOUT IDENTIFICATION SYMBOL
- 3001 CURVE IDENTIFICATION SYMBOL
- BUMPING POST
- EXISTING BALLASTED TRACK
- EXISTING EMBEDDED TRACK

TRACK CHARTS

- STANDARD STRENGTH 115 RE RAIL
- HIGH STRENGTH 115 RE RAIL
- RESTRAINING RAIL
- EXISTING RAIL
- STATION PLATFORM SYMBOL
- EXISTING TRAFFIC SIGNAL
- NEW SIGNAL PHASE
- NEW TRAFFIC SIGNAL

HORIZONTAL CURVES

CIRCULAR CURVES ARE DEFINED AND SPECIFIED BY THEIR RADII.

θs	SPIRAL ANGLE (IN DEGREES)
Δ	CENTRAL ANGLE OF CIRCULAR CURVE (IN DEGREES)
CS	CURVE TO SPIRAL
E	EXTERNAL DISTANCE
Ea	ACTUAL SUPERELEVATION
Eu	UNBALANCED SUPERELEVATION
I	TOTAL INTERSECTION ANGLE (IN DEGREES)
L	LENGTH OF CIRCULAR CURVE (ARC DEFINITION FOR TRANSIT FACILITIES)
LC	LENGTH OF CHORD
Ls1	LENGTH OF FIRST SPIRAL
Ls2	LENGTH OF SECOND SPIRAL
LTs	LENGTH OF SPIRAL TANGENTS
PC	POINT OF CURVE
PI	POINT OF INTERSECTION
PT	POINT OF TANGENCY
R	RADIUS OF CIRCULAR CURVE
SC	SPIRAL TO CURVE
ST	SPIRAL TO TANGENT
T	TANGENT LENGTH OF CIRCULAR CURVE
TS	TANGENT TO SPIRAL
V	VELOCITY (SPEED)

ACTUAL SUPERELEVATION (Ea) WILL BE ATTAINED AND REMOVED LINEARLY THROUGHOUT THE FULL LENGTH OF THE SPIRAL TRANSITION CURVE.

MISCELLANEOUS

AREMA	AMERICAN RAILWAY ENGINEERING & MAINTENANCE OF WAY ASSOCIATION
℄	CENTER LINE
CL.	CLEAR
HSTR	HIGH STRENGTH RAIL
MAX.	MAXIMUM
MIN.	MINIMUM
NTS	NOT TO SCALE
O.C.	ON CENTERS
PGL	PROFILE GRADE LINE
PITO	POINT OF INTERSECTION OF TURNOUT
PS	POINT OF SWITCH
TRK	TRACK
WWF	WELDED WIRE FABRIC

VERTICAL CURVES

LVC	LENGTH OF VERTICAL CURVE
MO	MIDDLE ORDINATE
PVC	POINT OF VERTICAL CURVE
PVI	POINT OF VERTICAL INTERSECTION
PVT	POINT OF VERTICAL TANGENT
PVI	POINT OF VERTICAL INTERSECTION

GENERAL NOTES:

1. TRACK GAUGE SHALL BE 4'-8½" EXCEPT FOR CURVES WITH GAUGE WIDENING USING 115 RE RAIL. GAUGE WIDENING SHALL BE AT A CONSTANT TRANSITION RATE AND NOT MORE THAN ¼ INCH IN A DISTANCE OF 31 FEET, TO A MAXIMUM OF ½ INCH IN 62 FEET. FULL GAUGE WIDENING SHALL BE ACCOMPLISHED ON THE TANGENT IN APPROACH TO THE POINT OF CURVE AND REMOVED FOLLOWING THE POINT OF TANGENT IN THE SIMPLE CURVE. IN SPIRALS, GAUGE WIDENING SHALL BE APPLIED AND REMOVED WITHIN THE SPIRALS. IF THE SPIRAL IS TOO SHORT FOR FULL GAUGE WIDENING TO BE ACCOMPLISHED BEYOND THE RATE EXCEEDING ¼ INCH IN 31 FEET, SUFFICIENT SUFFICIENT GAUGE WIDENING SHALL BE PLACED IN THE APPROACH TANGENTS TO MEET THE RATE OF ¼ INCH IN 31 FEET. IF ADJACENT CURVES WITH BOTH REQUIRING WIDENING ARE TOO CLOSE TOGETHER TO ALLOW RUN OUT OF GAUGE WIDENING, THE WIDENED GAUGE SHALL BE MAINTAINED BETWEEN THE CURVES. THE ALIGNMENTS SHOWN ON THE CONTRACT DRAWINGS ARE BASED ON GAUGE.
2. THE TRACK PLANS SHOW ONLY SOME OF THE RAIL JOINTS. LOCATE ADDITIONAL RAIL JOINTS IN ACCORDANCE WITH THE SHOP DRAWINGS.
3. THE ARM LENGTHS OF FROGS ARE NOT ALWAYS DRAWN TO SCALE. THE CONTRACTOR WILL DETERMINE THE EXACT ARM LENGTHS.
4. CONSTRUCT NEW SPECIAL TRACKWORK AS SHOWN ON THE APPROVED SHOP DRAWINGS.
5. THE PROFILE GRADE LINE (PGL) REFERS TO THE TOP OF RAIL ELEVATION.
6. RAILS SHALL HAVE ZERO CANT UNLESS OTHERWISE INDICATED.

DATE	APPR.		
REVISED			
ISSUED:			REFERENCE

RECOMMENDED: Mohammad Khalid
DEPUTY CHIEF ENGINEER

APPROVED:
CHIEF TRANSPORTATION ENGINEER

D.C. DEPARTMENT OF TRANSPORTATION

STREETCAR STANDARD DRAWINGS

STANDARD TRACK SYMBOLS, ABBREVIATIONS, & GENERAL NOTES

PROJECT ENG.
DESIGNED BY
CHECKED BY
DRAWN BY
PROJECT MGR. CY
DIVISION CHIEF
DATE
FILE
DWG. NO. T-01

c:\pwwork\plit\d0498351\S_G-T-01.dgn
4/20/2012

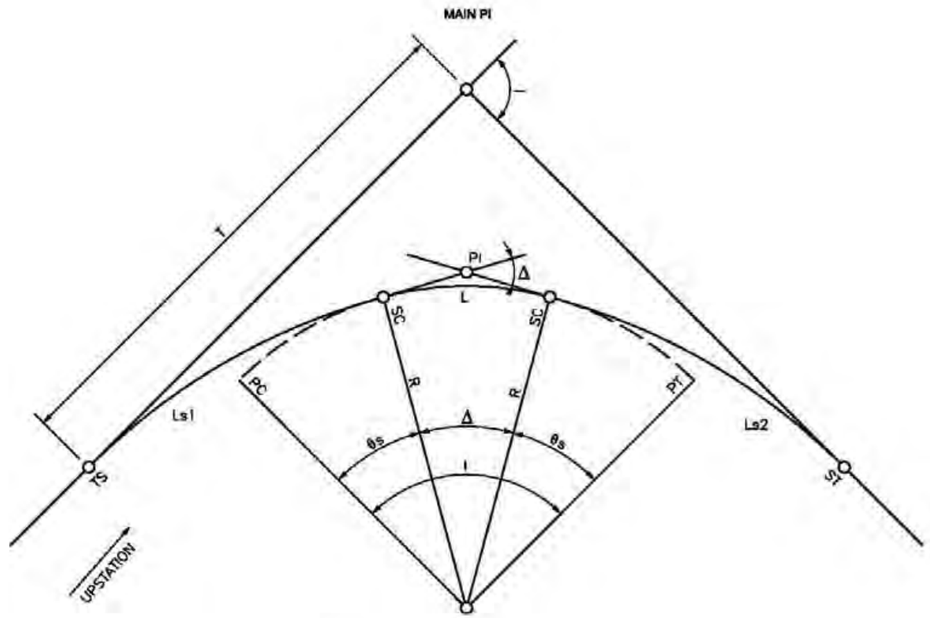

CIRCULAR CURVE WITH SPIRALS

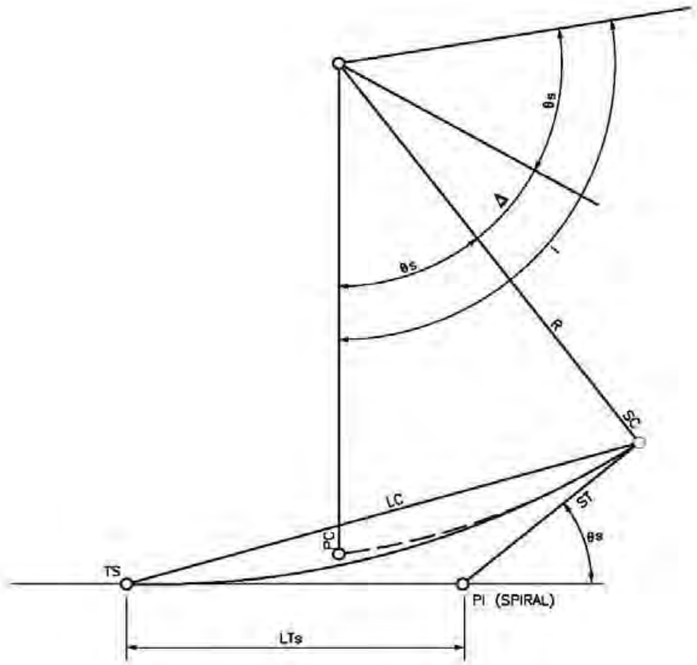

SPIRAL TRANSITION CURVES

c:\pwworking\plt1\d0498351\S_G-T-02.dgn
12/7/2012

			RECOMMENDED: Mohammad Khalid — DEPUTY CHIEF ENGINEER	D.C. DEPARTMENT OF TRANSPORTATION
DATE	APPR.		APPROVED: — CHIEF TRANSPORTATION ENGINEER	STREETCAR STANDARD DRAWINGS
REVISED				HORIZONTAL CURVES
ISSUED:		REFERENCE		PROJECT ENG: / DESIGNED BY: / CHECKED BY: / DRAWN BY: / PROJECT MGR.: CY / DIVISION CHIEF: / DATE: / FILE: / DWG. NO. T-02

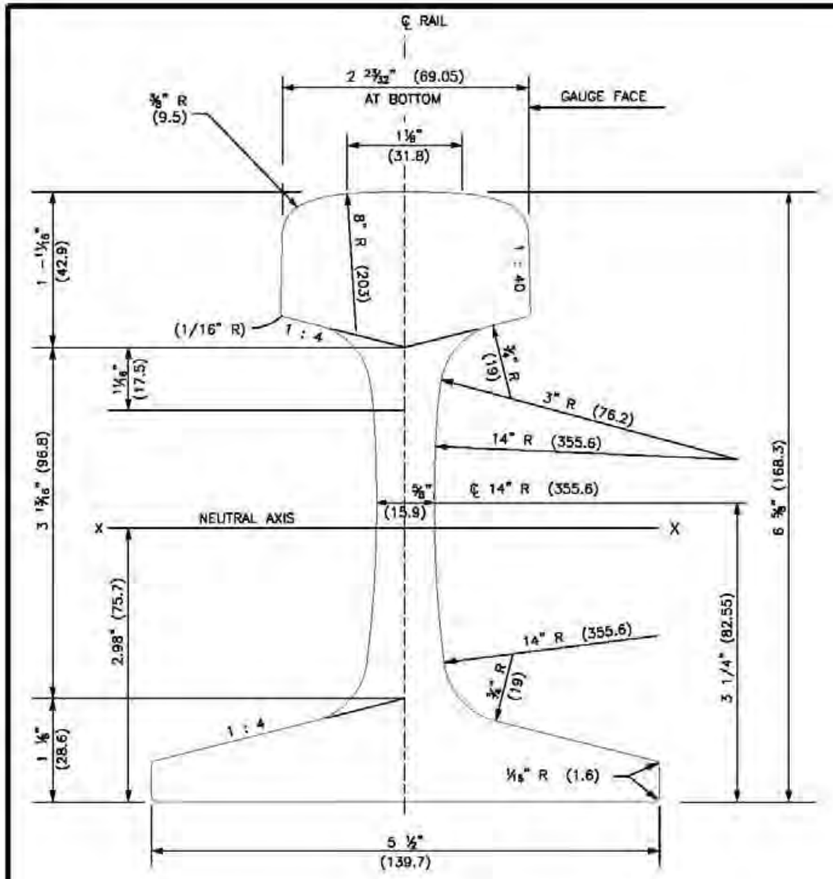

RAIL DETAIL - AREMA 115 RE

( ) DIMS ARE IN MM
AREA= 11.2171 SQ. IN.
WEIGHT= 114.3757 LB./YD.

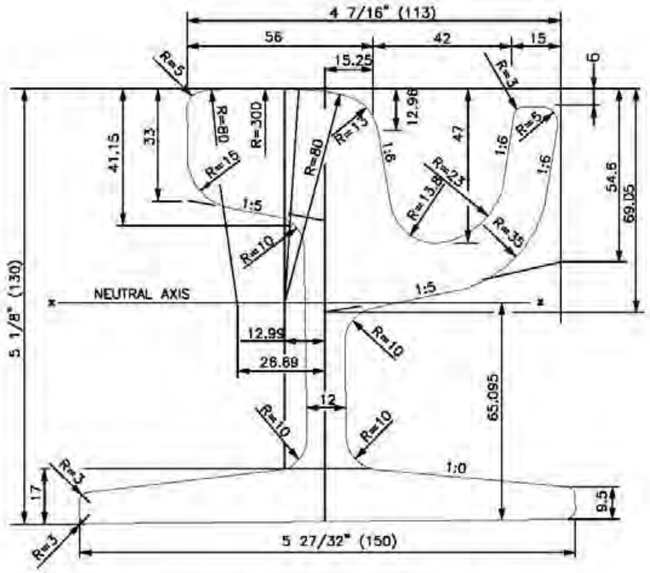

EUROPEAN GIRDER RAIL DETAIL - 51R1

( ) DIMS ARE IN MM

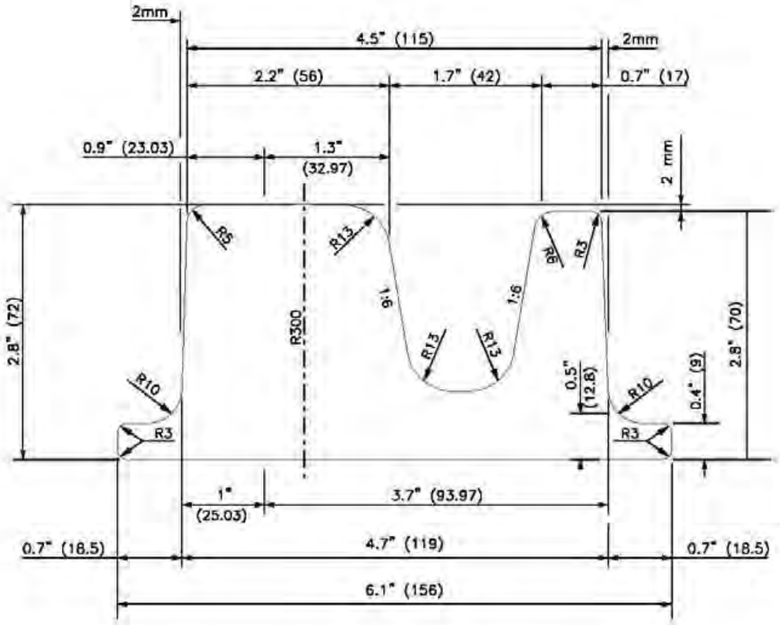

RAIL DETAIL - GROOVE BLOCK

( ) DIMS ARE IN MM

			RECOMMENDED: Mohammad Khalil / DEPUTY CHIEF ENGINEER	D.C. DEPARTMENT OF TRANSPORTATION
				STREETCAR STANDARD DRAWINGS
DATE	APPR.		APPROVED: Robert Thomas / CHIEF TRANSPORTATION ENGINEER	RAIL SECTION DETAILS
REVISED				
ISSUED:		REFERENCE		

PROJECT ENG.
DESIGNED BY:
CHECKED BY:
DRAWN BY:
PROJECT MGR. CV
DIVISION CHIEF
DATE:
FILE:
DWG. NO. T-03

c:\projects\pw\pw\dgn\pw\T-03-STS-49498356\T-03.dgn 2020/03/31

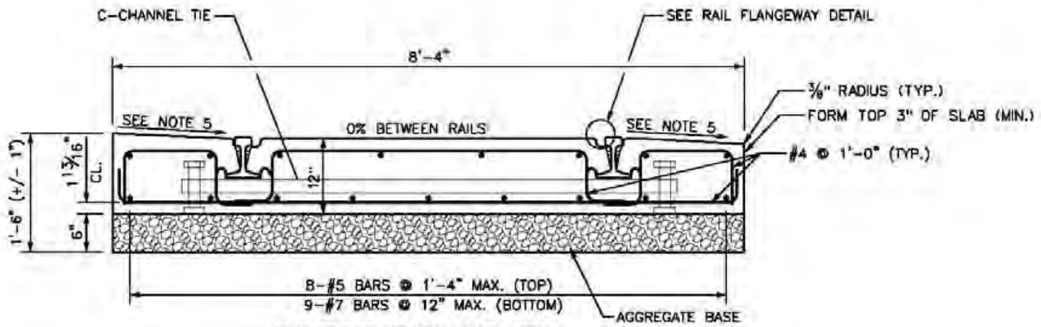

EMBEDDED TRACK SLAB DETAIL
NTS

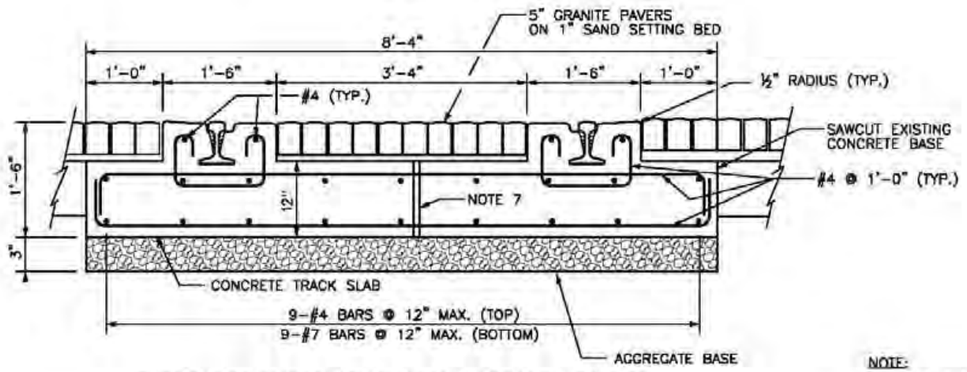

EMBEDDED TRACK SLAB DETAIL WITH GRANITE PAVERS
NTS

NOTE:
SEE RAIL FLANGEWAY DETAIL FOR EMBEDDED TRACK NOTES.

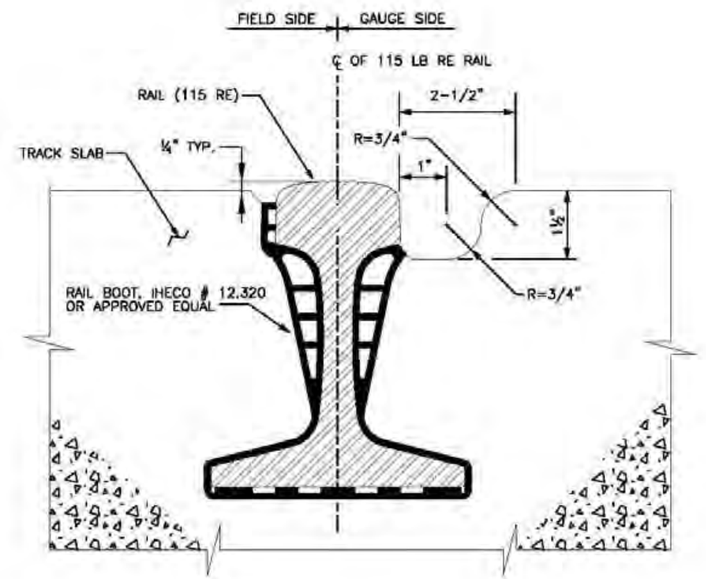

RAIL FLANGEWAY DETAIL
NTS

NOTES:

1. REINFORCING SHALL BE UNCOATED, 60KSI STEEL. LONGITUDINAL BARS SHALL BE CONTINUOUSLY LAPPED WITH NEXT BAR FOR TENSION SPLICE. MINIMUM CONCRETE COVER ON ALL BARS SHALL BE 2" EXCEPT AS NOTED. ALL CONTACT AREAS BETWEEN BARS SHALL BE TACK WELDED FOR ELECTRICAL CONTINUITY.
2. JOINT GROOVES TRANSVERSELY ACROSS TRACK SLAB SHALL BE PLACED EVERY 10 FEET ABOVE C-CHANNEL TIES. GROOVE DEPTH SHALL BE 1/2".
3. PROPOSED PROFILE IS TOP OF RAIL. NOTE THAT TOP OF CONCRETE BETWEEN RAILS IS 1/4" BELOW TOP OF RAIL.
4. AVOID DAMAGING THE RAIL BOOT DURING STORAGE AND INSTALLATION. REPAIR ALL PUNCTURES, RIPS, TEARS AND GOUGES IN ACCORDANCE WITH MANUFACTURER'S INSTRUCTIONS TO PREVENT STRAY CURRENT LEAKAGE.
5. CROSS SLOPE VARIES (UP OR DOWN), 5% MAX. REFER TO GRADING PLAN SHEETS.
6. EMBEDDED RAIL IS TO BE INSTALLED WITH ZERO CANT UNLESS SPECIFICALLY SHOWN OTHERWISE.
7. CONTRACTOR SHALL SUBMIT C-CHANNEL TIE ASSEMBLY DESIGN FOR APPROVAL.

			RECOMMENDED: Muhammad Khalid DEPUTY CHIEF ENGINEER	D.C. DEPARTMENT OF TRANSPORTATION STREETCAR STANDARD DRAWINGS
DATE	APPR.		APPROVED: [signature] CHIEF TRANSPORTATION ENGINEER	EMBEDDED TRACK SLAB DETAILS
REVISED				
ISSUED:		REFERENCE		

PROJECT ENG.
DESIGNED BY
CHECKED BY
DRAWN BY
PROJECT MGR. CY
DIVISION CHIEF
DATE
FILE
DWG. NO. T-04

c:\pwworking\plit\d0499351\S_G-T-04.dgn
1/20/2012

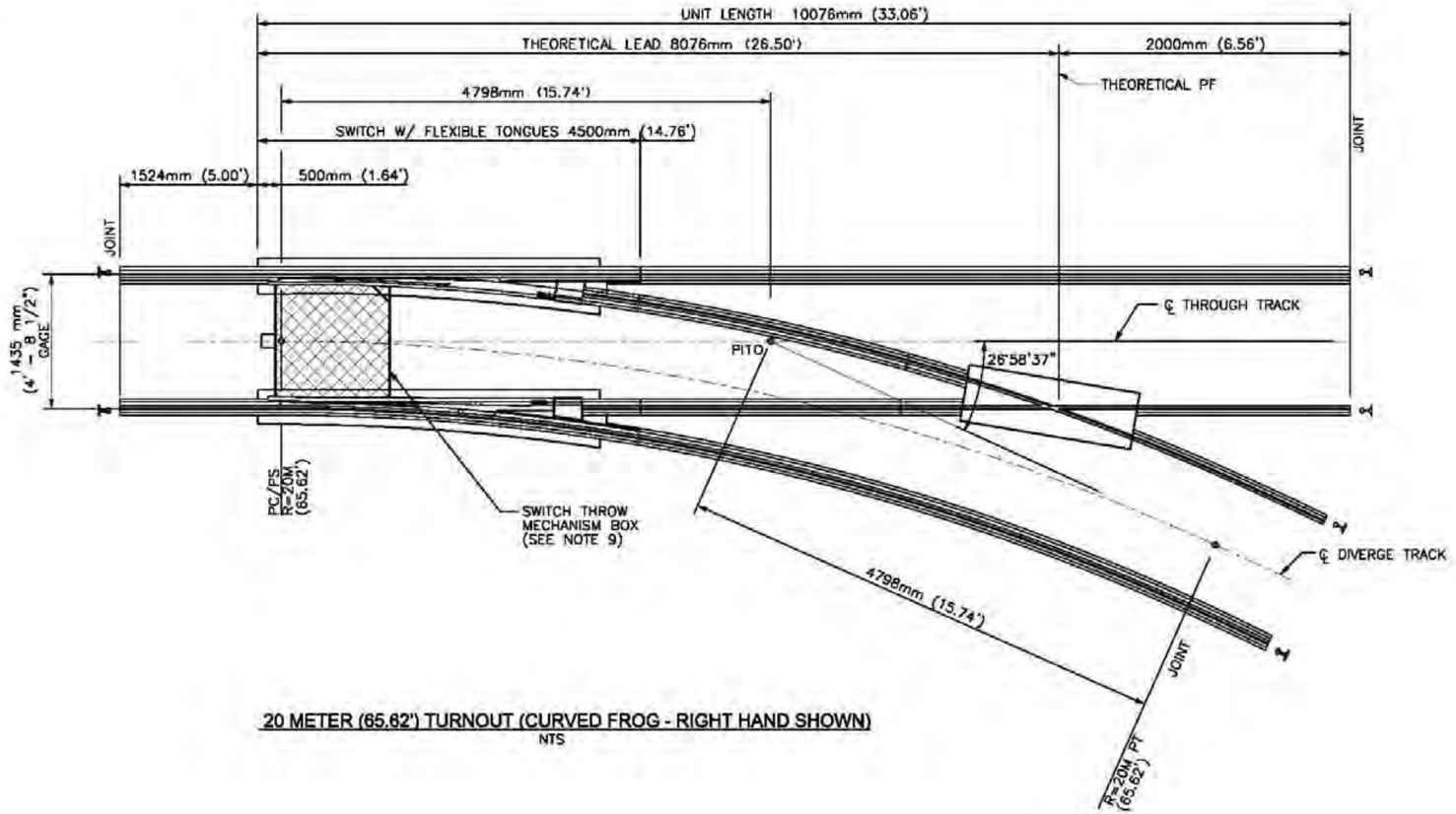

20 METER (65.62') TURNOUT (CURVED FROG - RIGHT HAND SHOWN)
NTS

NOTES:

1. THIS DRAWING PROVIDES THE BASIS OF DESIGN FOR BIDDING PURPOSES ONLY. FINAL TURNOUT DESIGN SHALL BE ACCORDING TO SHOP DRAWINGS SUBMITTED BY SUPPLIER AND REVIEWED BY THE ENGINEER.
2. THE SWITCH CONSISTS OF DOUBLE TONGUE FLEXIBLE SWITCH POINTS WITH KEY FASTENED HEELS TO BE INSTALLED IN PAVED TURNOUT CONSTRUCTION.
3. THE RAIL AND COMPONENTS SHALL CONFORM TO 115RE RAIL.
4. SWITCH MACHINES WILL BE EITHER POWER, MANUAL, OR SPRING TYPES. SEE TRACK CHARTS FOR LOCATIONS. POWER AND MANUAL SWITCHES SHALL INCLUDE A SWITCH INDICATOR. SPRING SWITCHES MUST BE TRAILABLE WITH A SPRING AND RETURN MECHANISM (OR OTHER APPROVED MECHANISM).
5. ALL NOTED JOINTS ARE TO BE FIELD WELDED.
6. ALL DIMENSIONS ARE IN MILLIMETERS (FEET).
7. ACTUAL LENGTHS MAY VARY PER TURNOUT SUPPLIER. SEE SHOP DRAWINGS.
8. INSTALL DRAINS FROM SWITCH THROW MECHANISM BOX AND SWITCH HEATER BOX TO STORM SEWER.
9. MANUAL SWITCH MACHINE SHALL BE CONTEC MODEL CSV 34 OR APPROVED EQUAL. POWER SWITCH MACHINE SHALL BE CONTEC MODEL CSV 24 OR APPROVED EQUAL.
10. LEFT HAND TURNOUT SHALL BE OPPOSITE TO THAT SHOWN.

				D.C. DEPARTMENT OF TRANSPORTATION
			RECOMMENDED: Mohamed Khalil, DEPUTY CHIEF ENGINEER	STREETCAR STANDARD DRAWINGS
DATE	APPR.		APPROVED: CHIEF TRANSPORTATION ENGINEER	20 METER (65.62') CURVED TURNOUT DETAIL
REVISED				
ISSUED:		REFERENCE		

PROJECT ENG.
DESIGNED BY
CHECKED BY
DRAWN BY
PROJECT MGR. CV
DIVISION CHIEF
DATE
FILE
DWG. NO. T-05

c:\dgnwerking\pl1\d0498351\S-C-T-05.dgn
12/07/2012

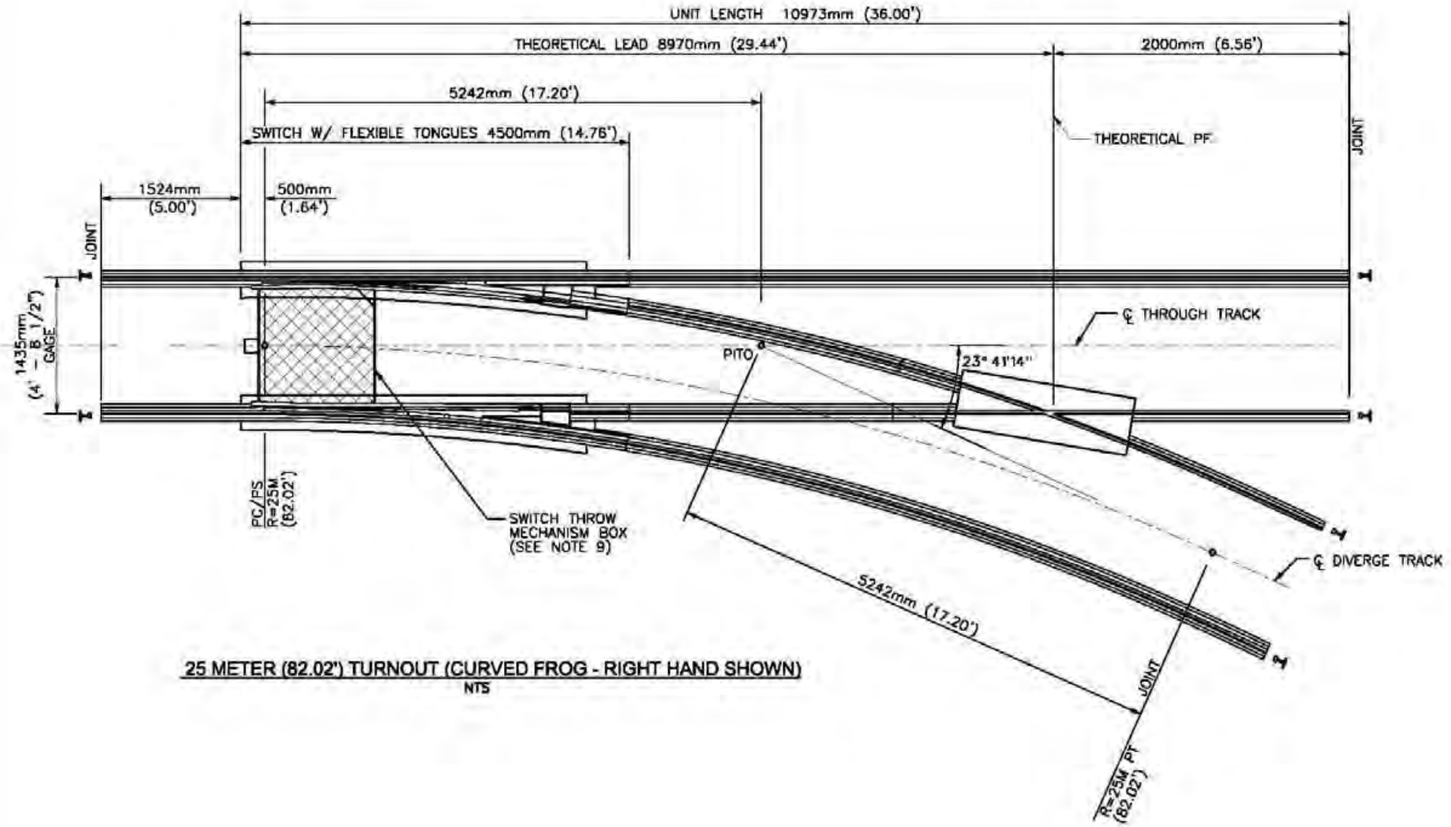

25 METER (82.02') TURNOUT (CURVED FROG - RIGHT HAND SHOWN)
NTS

NOTES:

1. THIS DRAWING PROVIDES THE BASIS OF DESIGN FOR BIDDING PURPOSES ONLY. FINAL TURNOUT DESIGN SHALL BE ACCORDING TO SHOP DRAWINGS SUBMITTED BY SUPPLIER AND REVIEWED BY THE ENGINEER.
2. THE SWITCH CONSISTS OF DOUBLE TONGUE FLEXIBLE SWITCH POINTS WITH KEY FASTENED HEELS TO BE INSTALLED IN PAVED TURNOUT CONSTRUCTION.
3. THE RAIL AND COMPONENTS SHALL CONFORM TO 115RE RAIL.
4. SWITCH MACHINES WILL BE EITHER POWER, MANUAL, OR SPRING TYPES. SEE TRACK CHARTS FOR LOCATIONS. POWER AND MANUAL SWITCHES SHALL INCLUDE A SWITCH INDICATOR. SPRING SWITCHES MUST BE TRAILABLE WITH A SPRING AND RETURN MECHANISM (OR OTHER APPROVED MECHANISM).
5. ALL NOTED JOINTS ARE TO BE FIELD WELDED.
6. ALL DIMENSIONS ARE IN MILLIMETERS (FEET).
7. ACTUAL LENGTHS MAY VARY PER TURNOUT SUPPLIER. SEE SHOP DRAWINGS.
8. INSTALL DRAINS FROM SWITCH THROW MECHANISM BOX AND SWITCH HEATER BOX TO STORM SEWER.
9. MANUAL SWITCH MACHINE SHALL BE CONTEC MODEL CSV 34 OR APPROVED EQUAL. POWER SWITCH MACHINE SHALL BE CONTEC MODEL CSV 24 OR APPROVED EQUAL.
10. LEFT HAND TURNOUT SHALL BE OPPOSITE TO THAT SHOWN.

			RECOMMENDED: Mohammad Khalil / DEPUTY CHIEF ENGINEER	D.C. DEPARTMENT OF TRANSPORTATION
DATE	APPR.		APPROVED: / CHIEF TRANSPORTATION ENGINEER	STREETCAR STANDARD DRAWINGS
REVISED				25 METER (82.02') CURVED EMBEDDED TURNOUT DETAIL
ISSUED:		REFERENCE		

PROJECT ENG.
DESIGNED BY
CHECKED BY
DRAWN BY
PROJECT MGR. CV
DIVISION CHIEF
DATE
FILE
DWG. NO T-08

c:\pwworking\pitt\d0498351\S_G-T-08.dgn
1/27/2012

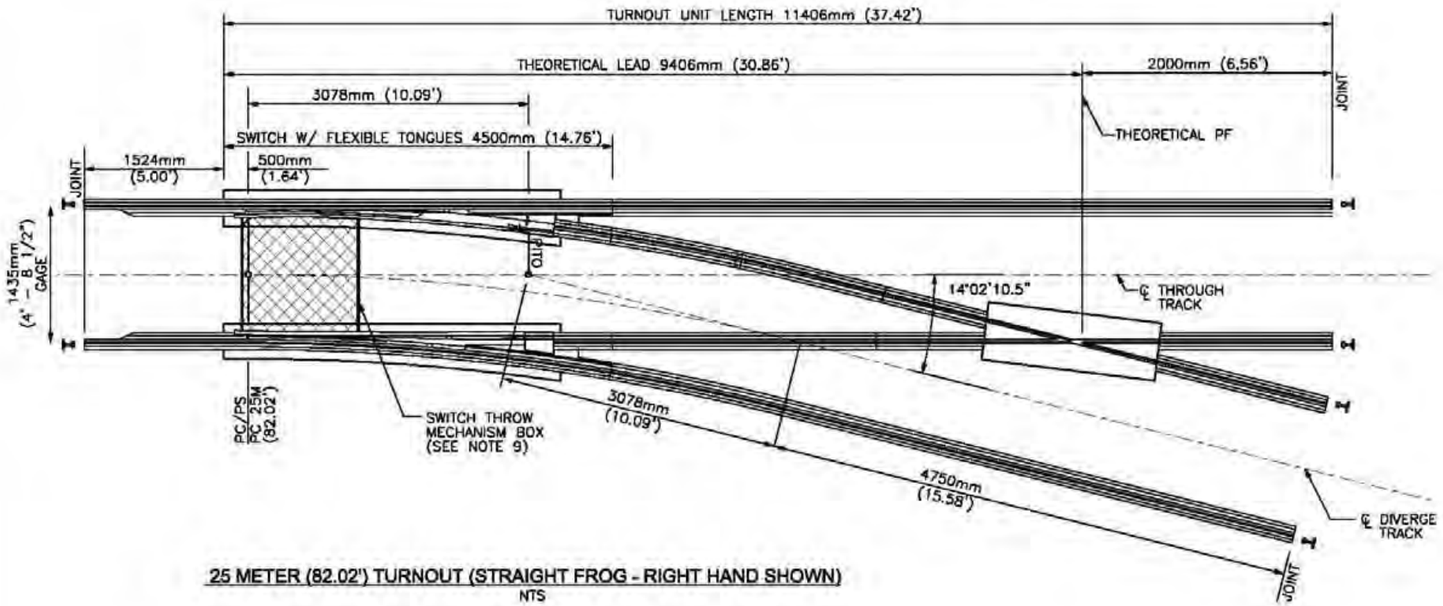

25 METER (82.02') TURNOUT (STRAIGHT FROG - RIGHT HAND SHOWN)
NTS

NOTES:

1. THIS DRAWING PROVIDES THE BASIS OF DESIGN FOR BIDDING PURPOSES ONLY. FINAL TURNOUT DESIGN SHALL BE ACCORDING TO SHOP DRAWINGS SUBMITTED BY SUPPLIER AND REVIEWED BY THE ENGINEER.
2. THE SWITCH CONSISTS OF DOUBLE TONGUE FLEXIBLE SWITCH POINTS WITH KEY FASTENED HEELS TO BE INSTALLED IN PAVED TURNOUT CONSTRUCTION.
3. THE RAIL AND COMPONENTS SHALL CONFORM TO 115RE RAIL.
4. SWITCH MACHINES WILL BE EITHER POWER, MANUAL, OR SPRING TYPES. SEE TRACK CHARTS FOR LOCATIONS. POWER AND MANUAL SWITCHES SHALL INCLUDE A SWITCH INDICATOR. SPRING SWITCHES MUST BE TRAILABLE WITH A SPRING AND RETURN MECHANISM (OR OTHER APPROVED MECHANISM).
5. ALL NOTED JOINTS ARE TO BE FIELD WELDED.
6. ALL DIMENSIONS ARE IN MILLIMETERS (FEET).
7. ACTUAL LENGTHS MAY VARY PER TURNOUT SUPPLIER. SEE SHOP DRAWINGS.
8. INSTALL DRAINS FROM SWITCH THROW MECHANISM BOX AND SWITCH HEATER BOX TO STORM SEWER.
9. MANUAL SWITCH MACHINE SHALL BE CONTEC MODEL CSV 34 OR APPROVED EQUAL. POWER SWITCH MACHINE SHALL BE CONTEC MODEL CSV 24 OR APPROVED EQUAL.
10. LEFT HAND TURNOUT SHALL BE OPPOSITE TO THAT SHOWN.

D.C. DEPARTMENT OF TRANSPORTATION

DATE	APPR.		RECOMMENDED: Muhammad Khalid DEPUTY CHIEF ENGINEER	STREETCAR STANDARD DRAWINGS	PROJECT ENG. DESIGNED BY CHECKED BY DRAWN BY PROJECT MGR. CY
REVISED			APPROVED: CHIEF TRANSPORTATION ENGINEER	25 METER (82.02') STRAIGHT EMBEDDED TURNOUT DETAIL	DIVISION CHIEF DATE FILE DWG. NO. T-07
ISSUED:		REFERENCE			

c:\pwworking\plit\d0499351\S_G-T-07.dgn
1/20/2012

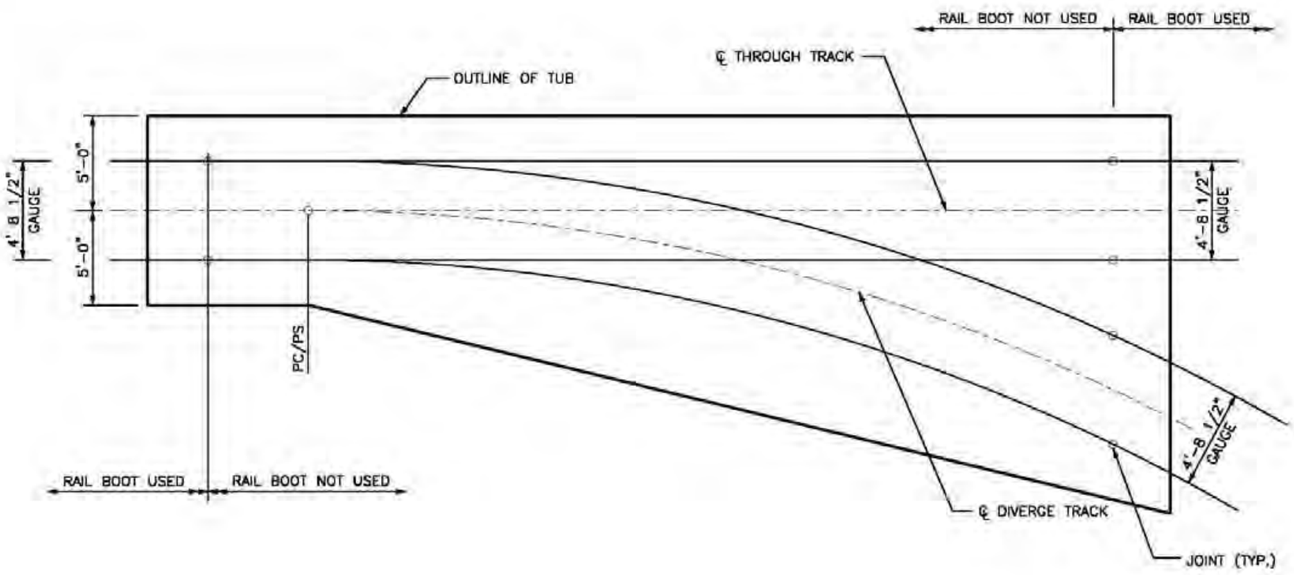

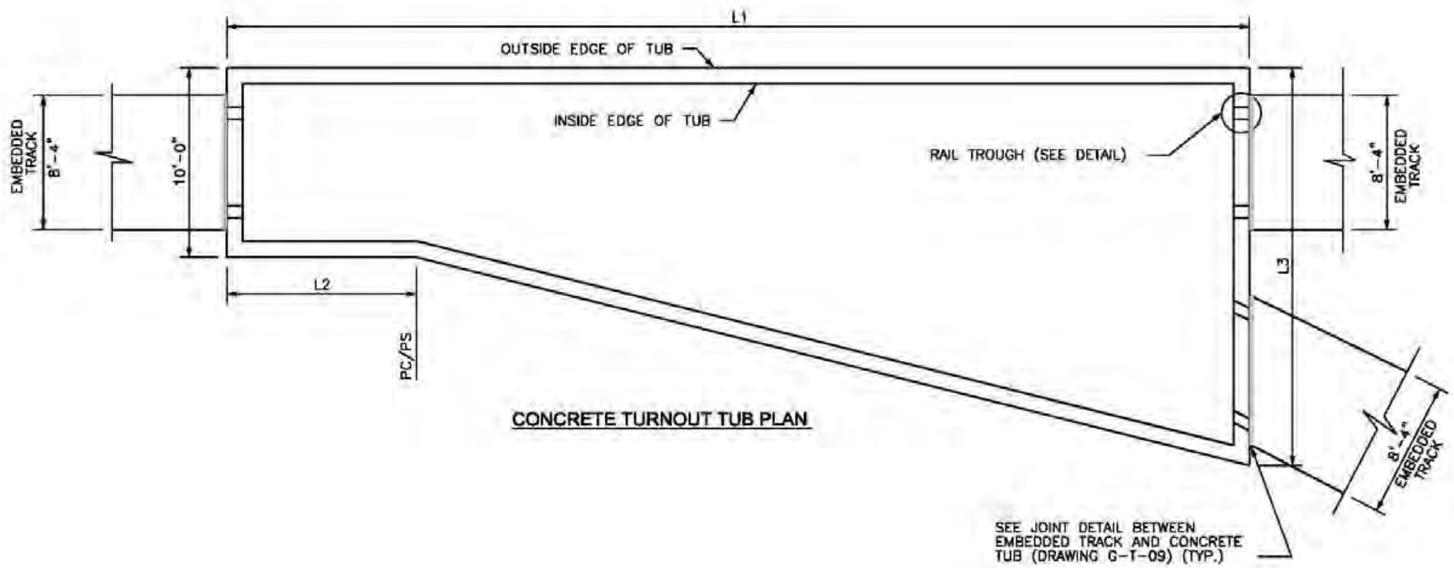

CONCRETE TURNOUT TUB PLAN

NOTES:

1. USE CLASS 30 (5000 PSI) CONCRETE FOR CONCRETE TUB.
2. VOIDS UNDER BASE OF RAIL BETWEEN SUPPORT PLATES SHALL BE SEALED WITH A COMPRESSIBLE MATERIAL THAT WILL PREVENT CONCRETE INFILL FROM ENTERING THE VOID UNDER THE RAIL BASE.
3. CHAMFER OR GROUT CORNERS AS REQUIRED BY INSULATING MEMBRANE MANUFACTURER.
4. CONDUITS AND DRAINS THAT MUST PENETRATE THROUGH THE INSULATING MEMBRANE SHALL BE PROTECTED BY ADDITIONAL MEMBRANE "BOOTS" OR OTHER METHODS AS REQUIRED BY THE MEMBRANE MANUFACTURER.
5. ALL DRAINAGE CONDUITS FROM HEATER BOXES, TEMPERATURE SENSOR BOXES, SWITCH MACHINES, AND SWITCH INDICATOR BOXES SHALL BE JOINED TOGETHER PRIOR TO EXITING THE CONCRETE TURNOUT TUB. CONTRACTOR TO PROVIDE ALL BENDS, FITTINGS AND INSTALLATIONS NEEDED FOR CONNECTIONS. CONTRACTOR SHALL INSTALL ONE 6" CONDUIT OUTLET PIPE FROM CONCRETE TURNOUT TUB THAT DRAINS ALL MECHANISMS WITHIN THE TUB.
6. ACTUAL LENGTHS MAY VARY PER TURNOUT SUPPLIER. SEE TURNOUT SHOP DRAWINGS AND ADJUST TURNOUT TUB LENGTHS IN FIELD.

TURNOUT	L1	L2	L3
20M (65.62') CURVED	41'	8'	21'
25M (82.02') CURVED	44'	8'	20'
25M (82.02') STRAIGHT	46'	8'	18'

DATE	APPR.		
REVISED			
ISSUED:			REFERENCE

RECOMMENDED: Mohammad Khalil
DEPUTY CHIEF ENGINEER

APPROVED:
CHIEF TRANSPORTATION ENGINEER

D.C. DEPARTMENT OF TRANSPORTATION

STREETCAR STANDARD DRAWINGS

TURNOUT TUB DETAILS
(SHEET 1 OF 2)

PROJECT ENG.
DESIGNED BY
CHECKED BY
DRAWN BY
PROJECT MGR. CV
DIVISION CHIEF
DATE
FILE
DWG. NO. T-08

c:\pwworking\plitydo1898351\S-G-T-08.dgn
1/20/2012

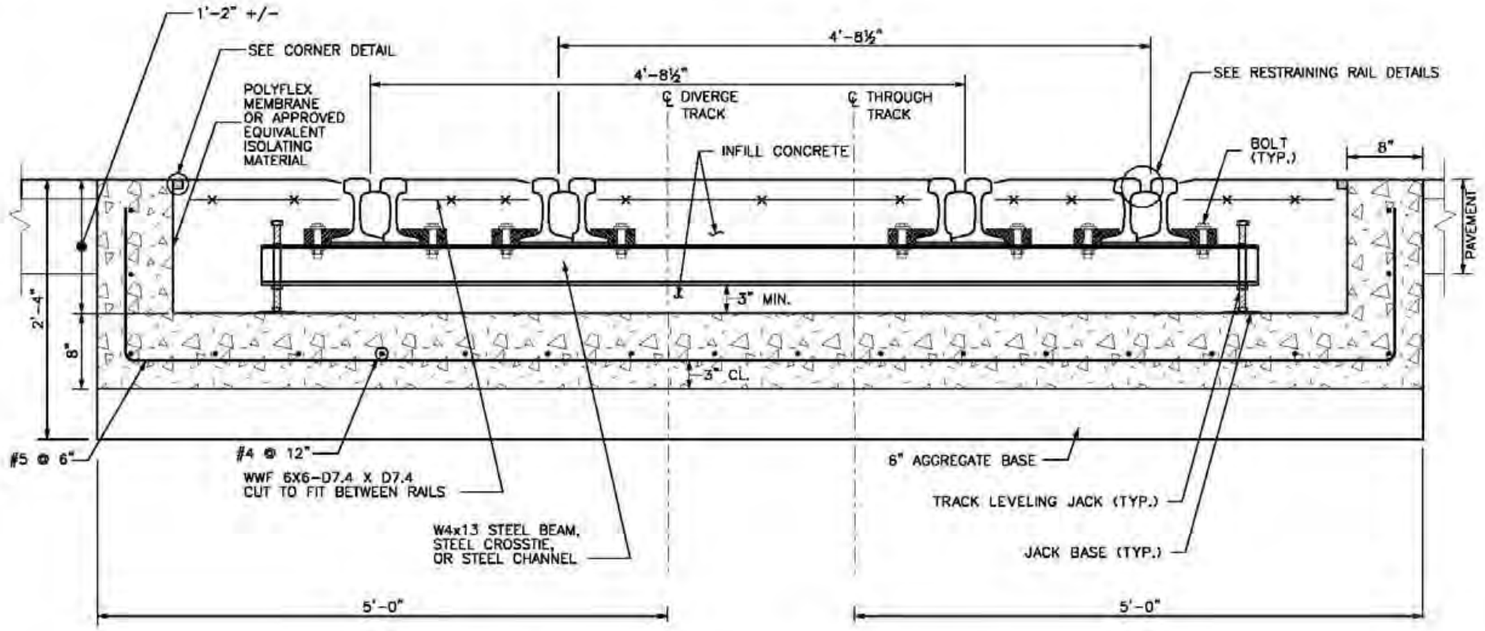

TYPICAL SECTION - CONCRETE TURNOUT TUB

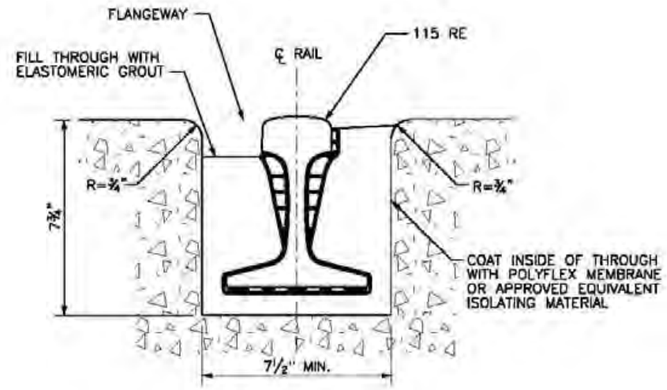

RAIL TROUGH DETAIL

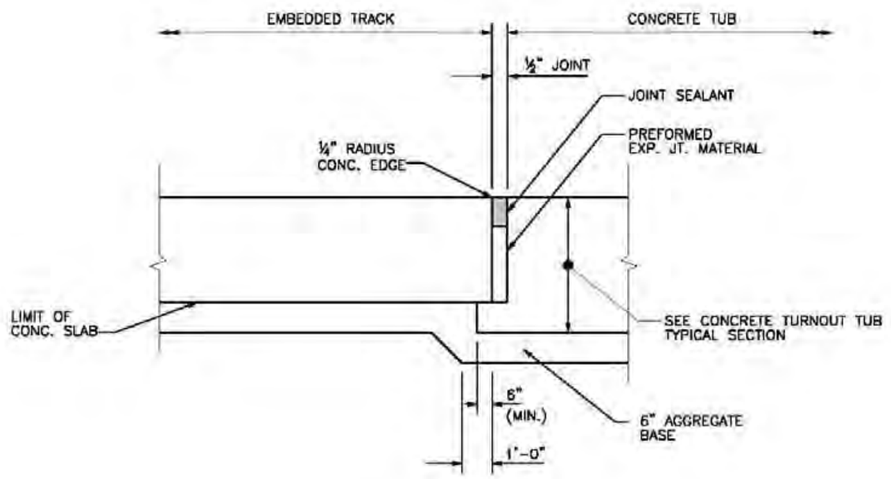

JOINT DETAIL

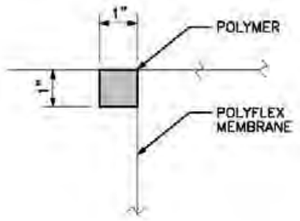

CORNER DETAIL

NOTES:

1. CONTRACTOR SHALL TAKE PRECAUTIONS TO ENSURE POLYFLEX MEMBRANE ISOLATING MATERIAL (OR EQUIVALENT) IS NOT DAMAGED DURING CONSTRUCTION OF THE SKELETON TRACK.

D.C. DEPARTMENT OF TRANSPORTATION

DATE	APPR.		RECOMMENDED: Mohammed Khalid DEPUTY CHIEF ENGINEER	STREETCAR STANDARD DRAWINGS	PROJECT ENG. / DESIGNED BY / CHECKED BY / DRAWN BY / PROJECT MGR. CY
REVISED			APPROVED: CHIEF TRANSPORTATION ENGINEER	TURNOUT TUB DETAILS (SHEET 2 OF 2)	DIVISION CHIEF / DATE / FILE / DWG. NO. T-08
ISSUED:		REFERENCE			

c:\pwworking\plit\d0499351\S_C-T-09.dgn
1/20/2012

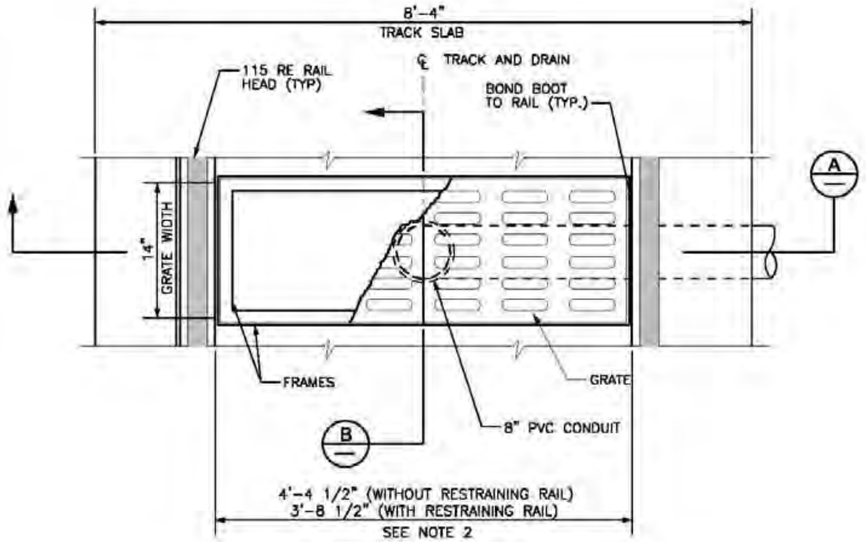

TRACK DRAIN PLAN
NTS

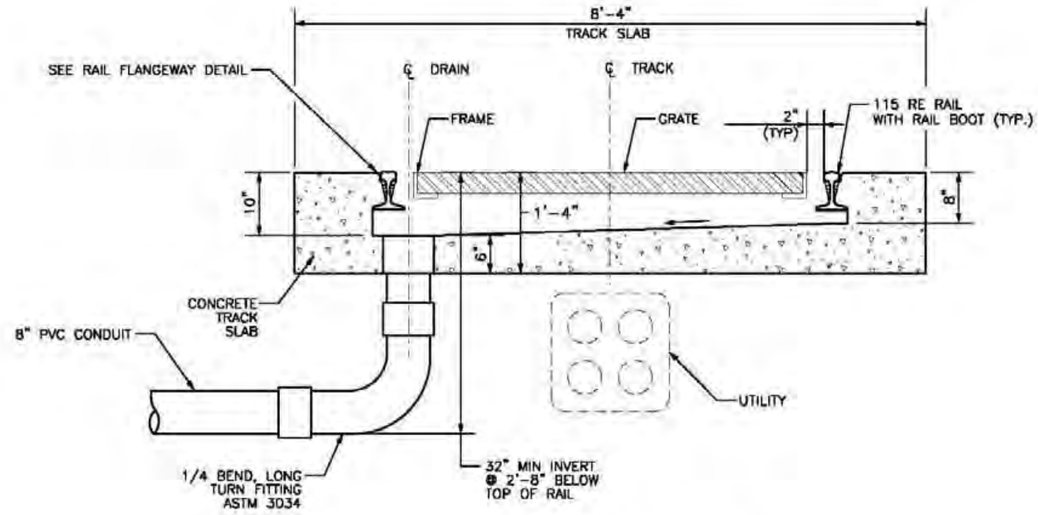

ALTERNATE TRACK DRAIN
NTS

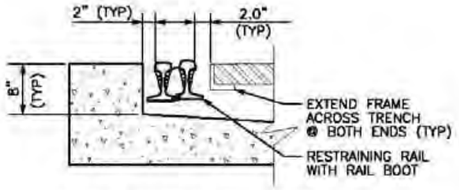

PARTIAL SECTION SHOWING RESTRAINING RAIL
NTS

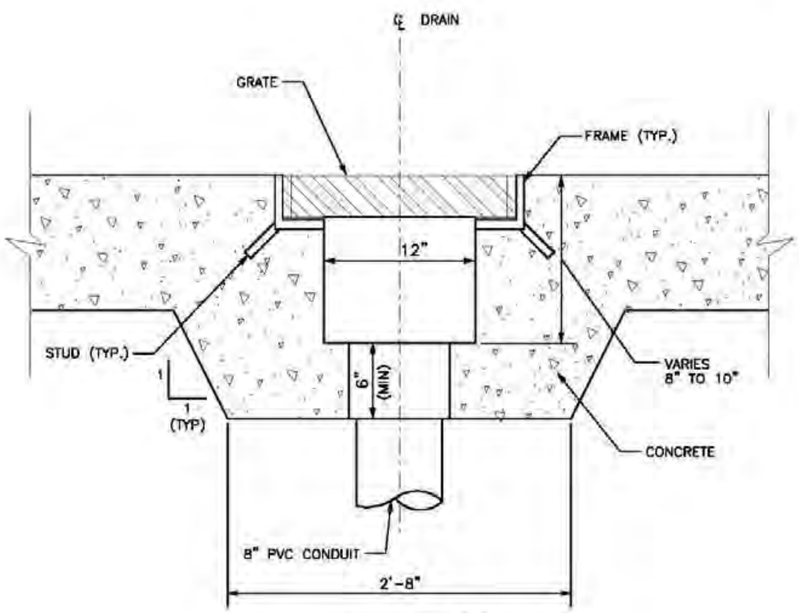

SECTION B
NTS

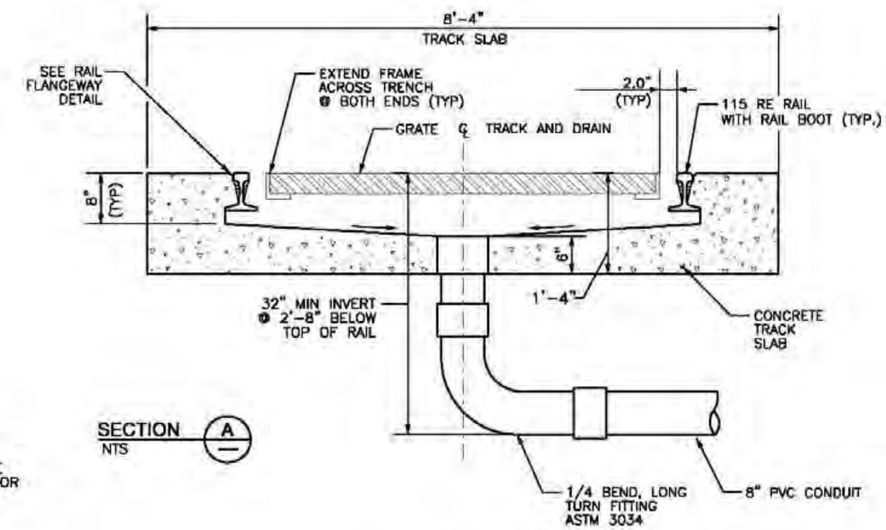

SECTION A
NTS

TRACK DRAIN GENERAL NOTES

1. PROVIDE NEENAH #R4999 DX HEAVY DUTY FRAME AND TYPE "C" GRATE OR APPROVED EQUAL.
2. CONTRACTOR TO SUBMIT ANGLE FRAME AND GRATE SHOP DRAWINGS TO ENGINEER FOR APPROVAL PRIOR TO FABRICATION.

			RECOMMENDED: Muhammad Khalid DEPUTY CHIEF ENGINEER	D.C. DEPARTMENT OF TRANSPORTATION
DATE	APPR.		APPROVED: CHIEF TRANSPORTATION ENGINEER	STREETCAR STANDARD DRAWINGS
REVISED				TRACK DRAIN DETAILS
ISSUED:		REFERENCE		

PROJECT ENG.
DESIGNED BY
CHECKED BY
DRAWN BY
PROJECT MGR. CY
DIVISION CHIEF
DATE
FILE
DWG. NO. T-10

c:\pwworking\plit\d0499351\S_G-T-10.dgn
1/20/2012

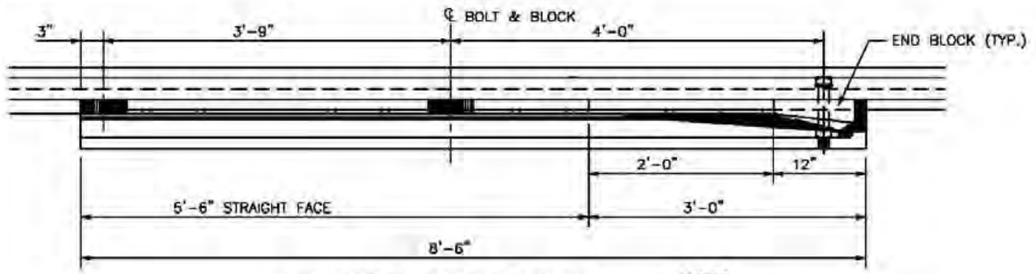

RESTRAINING RAIL END SECTION

NOTE:

RESTRAINING RAIL SHALL END 10' BEYOND THE PC, PT, TS, ST.

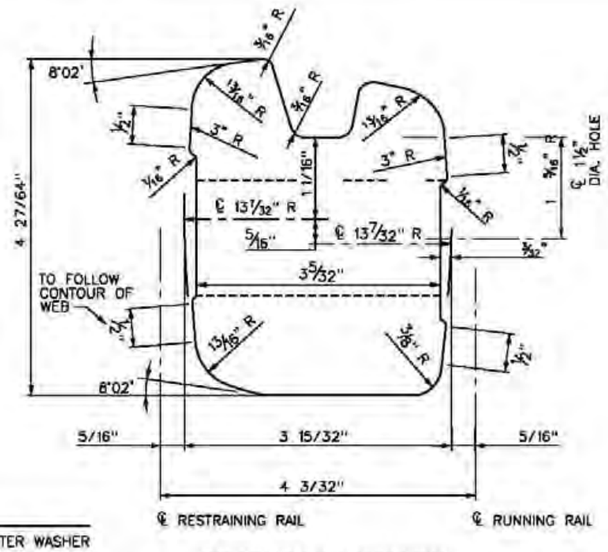

SEPARATOR BLOCK DETAIL

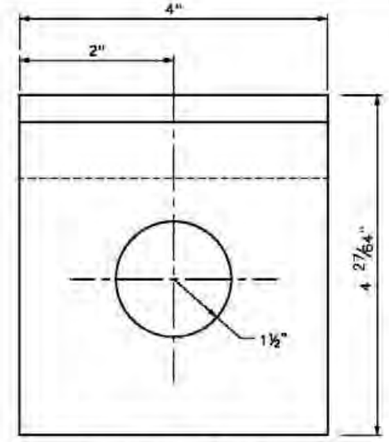

SEPARATOR BLOCK

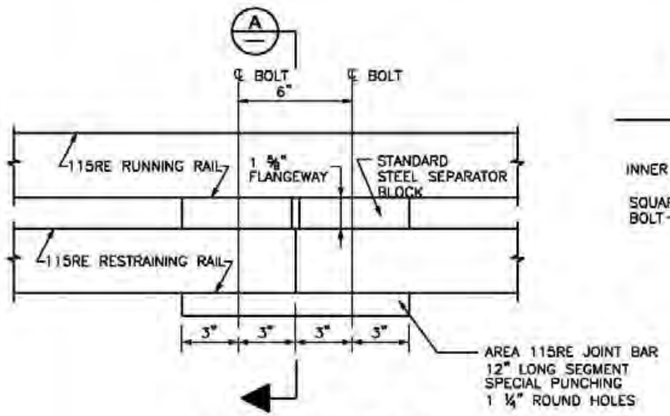

RESTRAINING RAIL JOINT

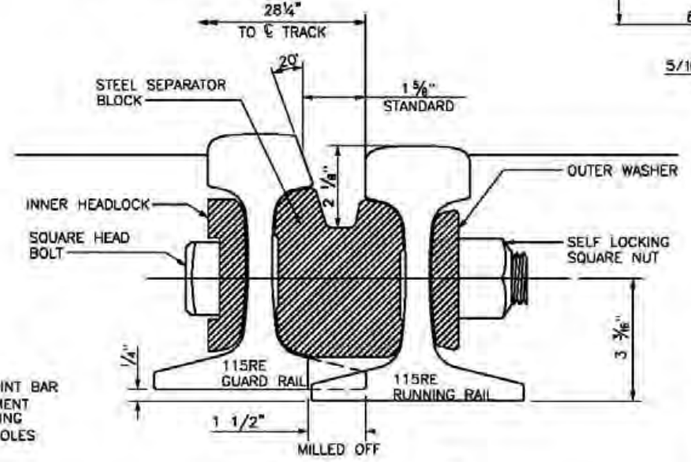

DETAIL (2)
RAISED AND BEVELED RESTRAINING RAIL SHOWN

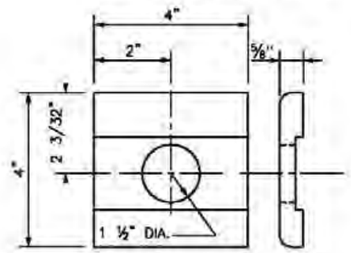

INNER HEADLOCK

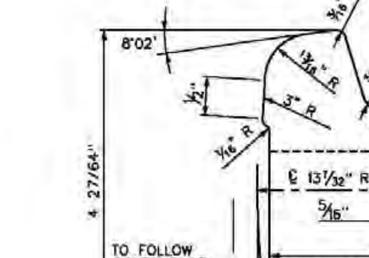

OUTER WASHER

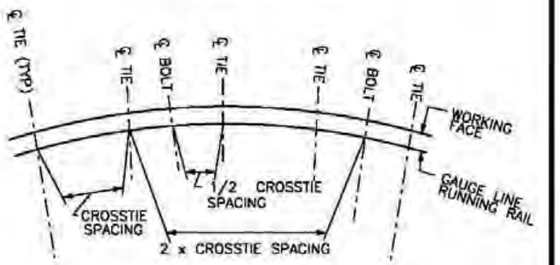

BLOCK & CROSSTIE SPACING

TABLE 1	
RESTRAINING RAIL SEPARATOR BLOCK LONGITUDINAL SPACING	
CURVE ℄ RADIUS	SPACING
TANGENT	48"
152 ≥ R > 76m	42"
R < 76m	36"

RESTRAINING RAIL CONDITIONS				
	ADJACENT TO INSIDE RUNNING RAIL	ADJACENT TO OUTSIDE RUNNING RAIL	RAISED GUARD	20° BEVEL ON RESTRAINING RAIL ADJACENT TO INSIDE RUNNING RAIL
100' < ℄ RADIUS < 600'	YES	NO	YES	NO
℄ RADIUS ≤ 100'	YES	YES	YES	YES
BEYOND TURNOUTS ON TANGENT TRACK	YES	YES	NO	NO

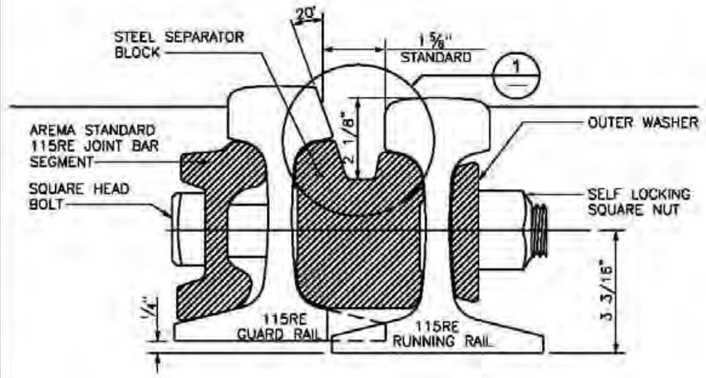

SECTION (A)
RAISED AND BEVELED RESTRAINING RAIL SHOWN

NOTE:

FINAL TURNOUT DESIGN SHALL BE ACCORDING TO SHOP DRAWINGS SUBMITTED BY SUPPLIER AND REVIEWED BY THE ENGINEER.

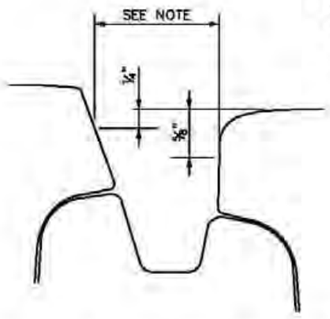

DETAIL - FLANGEWAY GAUGE (1)

NOTE:

INCREASE FLANGEWAY FROM 1⅝" TO 1 ¾" FOR FLANGEWAY ON OUTER RAIL OF CURVED TRACK. PROVIDE DETAILS OF EITHER SPECIAL SPACER BLOCKS OR SHIMS ON SHOP DRAWINGS.

NOTES:

1. LOCATION OF SEPARATOR BLOCKS SHALL BE COORDINATED WITH THE LOCATION OF TRACK DRAINS.
2. SPACE BETWEEN RUNNING RAIL AND RESTRAINING RAIL SHALL BE FILLED WITH ELASTOMERIC GROUT MAINTAINING A FLANGEWAY DEPTH OF 2⅛" BELOW THE TOP OF RAIL.

DATE	APPR.	
REVISED		
ISSUED:		REFERENCE

RECOMMENDED: Mohammad Khalid
DEPUTY CHIEF ENGINEER

APPROVED:
CHIEF TRANSPORTATION ENGINEER

D.C. DEPARTMENT OF TRANSPORTATION

STREETCAR STANDARD DRAWINGS

RESTRAINING RAIL DETAILS

PROJECT ENG.
DESIGNED BY
CHECKED BY
DRAWN BY
PROJECT MGR. CV
DIVISION CHIEF
DATE
FILE
DWG. NO T-11

c:\pw working\pit\v9049835\1\S_G-T-11.dgn
4/20/2012

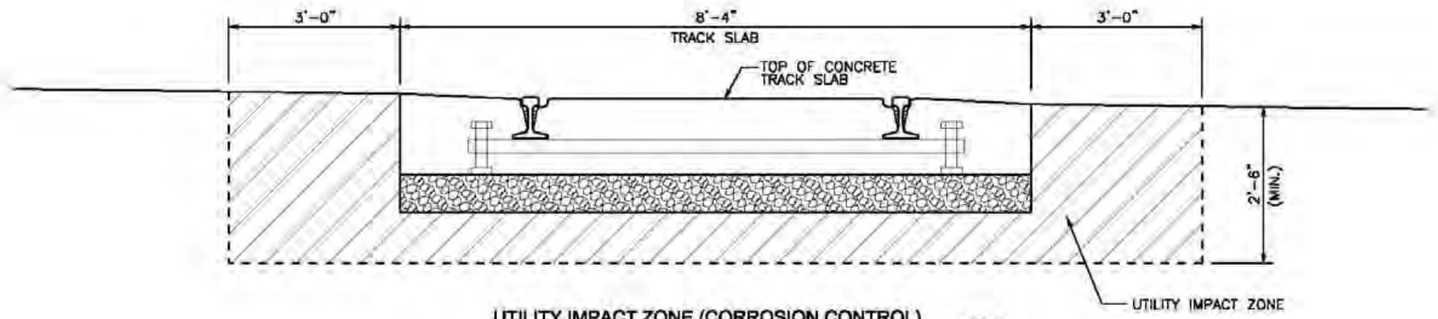

UTILITY IMPACT ZONE (CORROSION CONTROL)
NTS

NOTES:

METALLIC UTILITIES RUNNING PARALLEL DIRECTION UNDERNEATH THE TRACK SLAB AND WITHIN THE UTILITY IMPACT ZONE MAY REQUIRE RELOCATION.

THE UTILITY IMPACT ZONE MAY BE GREATER DEPENDING ON THE SOIL RESISTIVITY AND TRACK SLAB DESIGN (REINFORCED OR NOT).

DUCT LINES CARRYING FIBER OPTIC CABLES SHALL BE ENCASED IN CONCRETE.

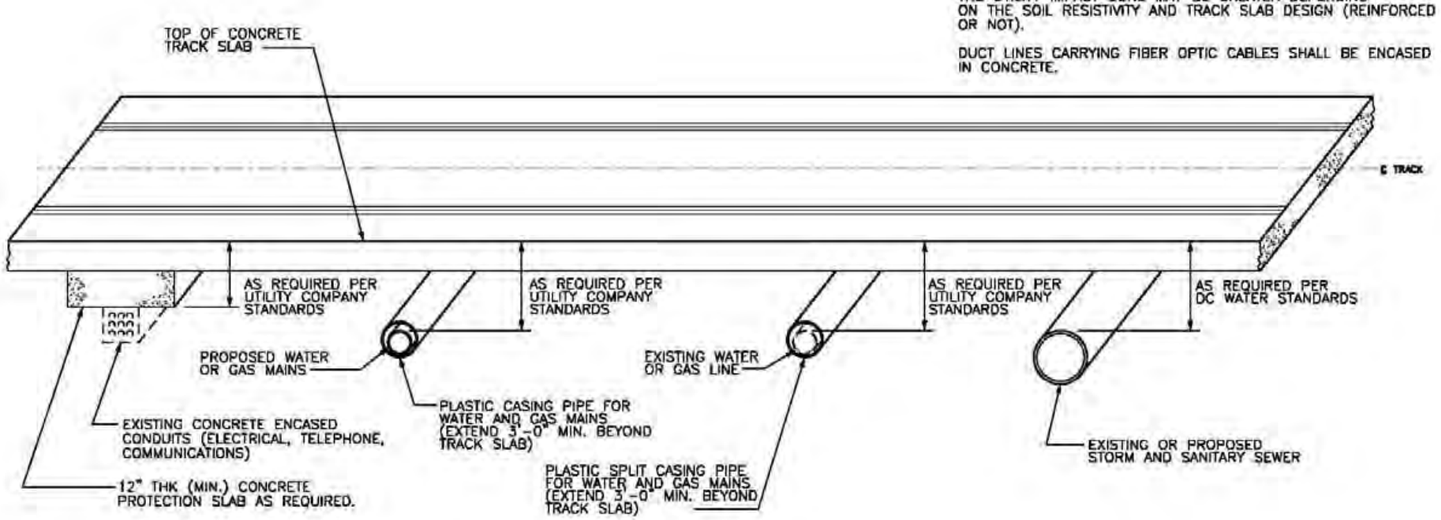

UTILITY IMPACT ZONE
NTS

			RECOMMENDED: Mohammed Khalil DEPUTY CHIEF ENGINEER	D.C. DEPARTMENT OF TRANSPORTATION	
				STREETCAR STANDARD DRAWINGS	PROJECT ENG. / DESIGNED BY / CHECKED BY / DRAWN BY / PROJECT MGR. CY
DATE	APPR.		APPROVED: CHIEF TRANSPORTATION ENGINEER	UTILITY IMPACT ZONE	DIVISION CHIEF / DATE / FILE / DWG. NO. T-12
REVISED					
ISSUED:		REFERENCE			

c:\pwworking\plit\d0499351\S_G-T-12.dgn
1/20/2012

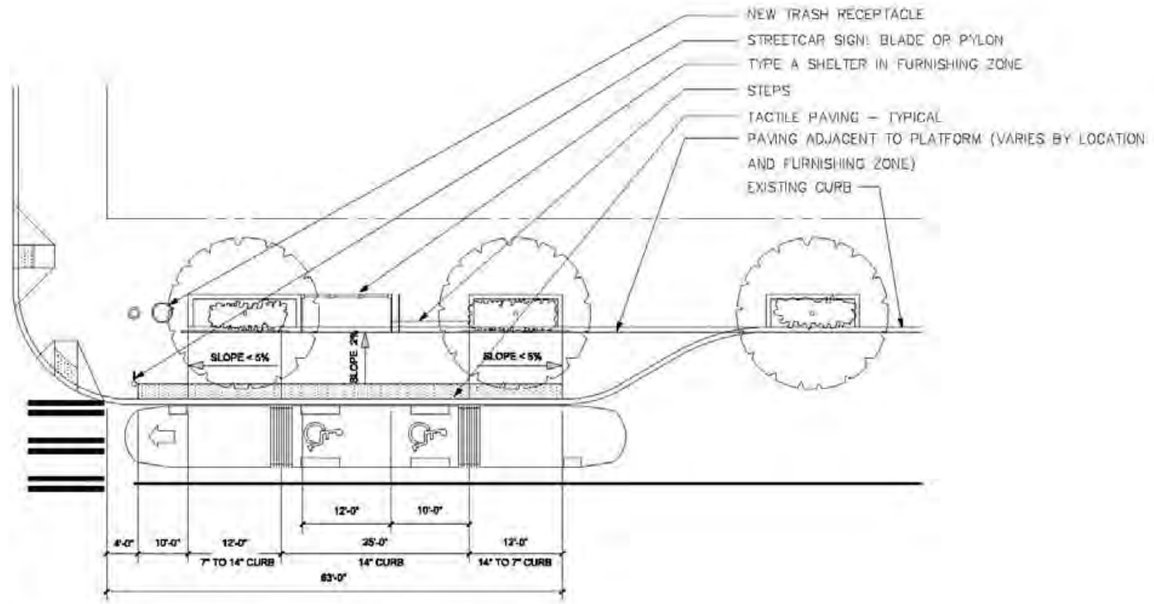

PLAN CURB EXTENSION A (1)
SCALE: 1:20

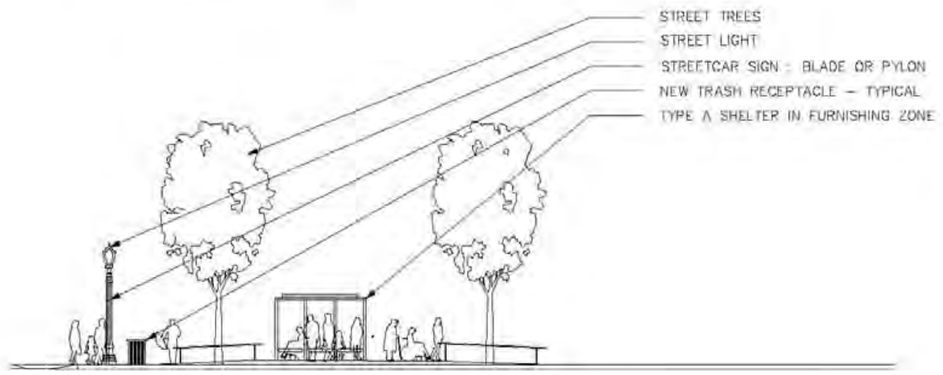

SECTION CURB EXTENSION A (2)
SCALE: 1:20

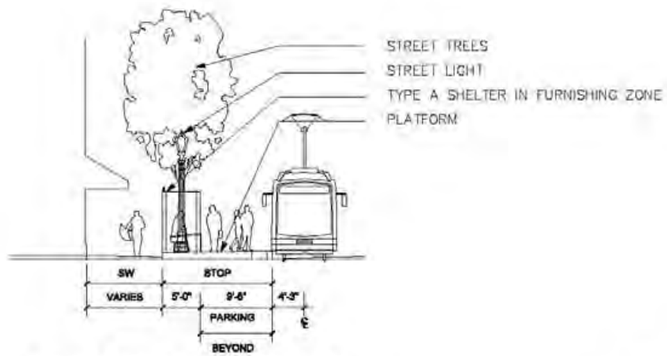

SECTION CURB EXTENSION A (3)
SCALE: 1:20

DATE	APPR.	
REVISED		
ISSUED:		REFERENCE

RECOMMENDED: Mohammad Khalil
DEPUTY CHIEF ENGINEER

APPROVED:
CHIEF TRANSPORTATION ENGINEER

D.C. DEPARTMENT OF TRANSPORTATION

STREETCAR STANDARD DRAWINGS

PROTOTYPE PLATFORM
CURB EXTENSION A

PROJECT ENG.
DESIGNED BY:
CHECKED BY:
DRAWN BY:
PROJECT MGR. GV

DIVISION CHIEF:
DATE:
FILE:
DWG. NO. A-01

c:\pwworking\pitt\d0539372\A1--PlatformPlans_AcuraExtension.dwg
1/20/2012

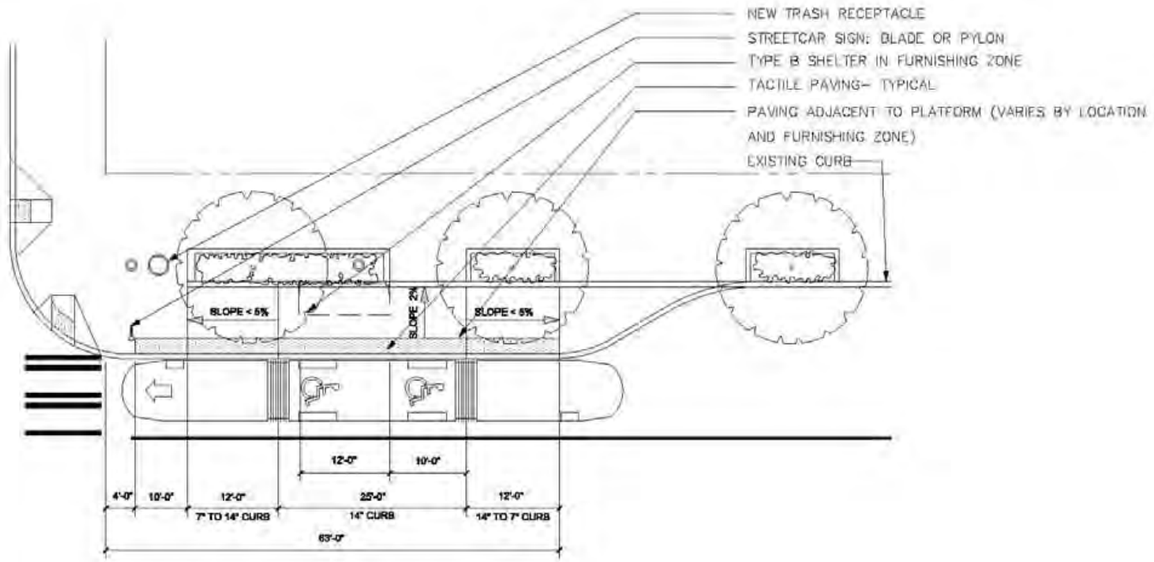

PLAN CURB EXTENSION B (1)
SCALE: 1:20

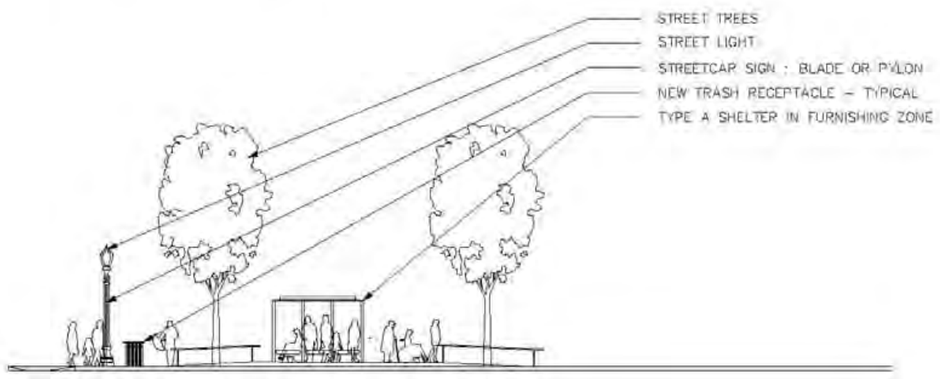

SECTION CURB EXTENSION B (2)
SCALE: 1:20

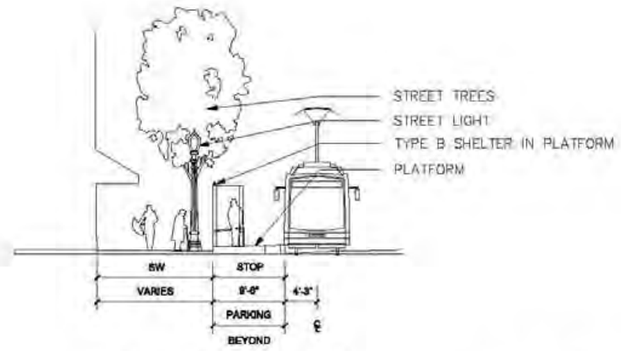

SECTION CURB EXTENSION B (3)
SCALE: 1:20

D.C. DEPARTMENT OF TRANSPORTATION

			RECOMMENDED: Mohammad Khalil DEPUTY CHIEF ENGINEER	STREETCAR STANDARD DRAWINGS
DATE	APPR.		APPROVED: CHIEF TRANSPORTATION ENGINEER	PROTOTYPE PLATFORM CURB EXTENSION B
REVISED				
ISSUED:		REFERENCE		

PROJECT ENG.
DESIGNED BY:
CHECKED BY:
DRAWN BY:
PROJECT MGR. GV
DIVISION CHIEF:
DATE:
FILE:
DWG. NO. A-02

c:\pwworking\plt1\d0539372\A1-2-PlatformPlans_BeyondExtension.dwg
1/20/2012

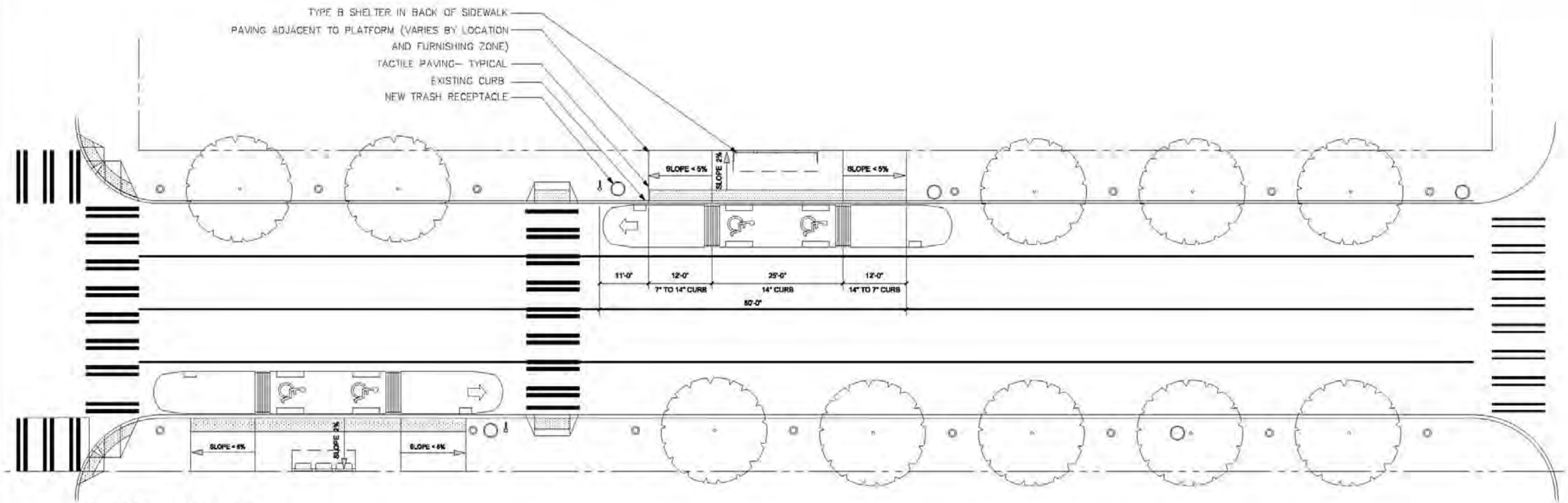

PLAN SIDE CURB STOP (1)
SCALE: 1:20

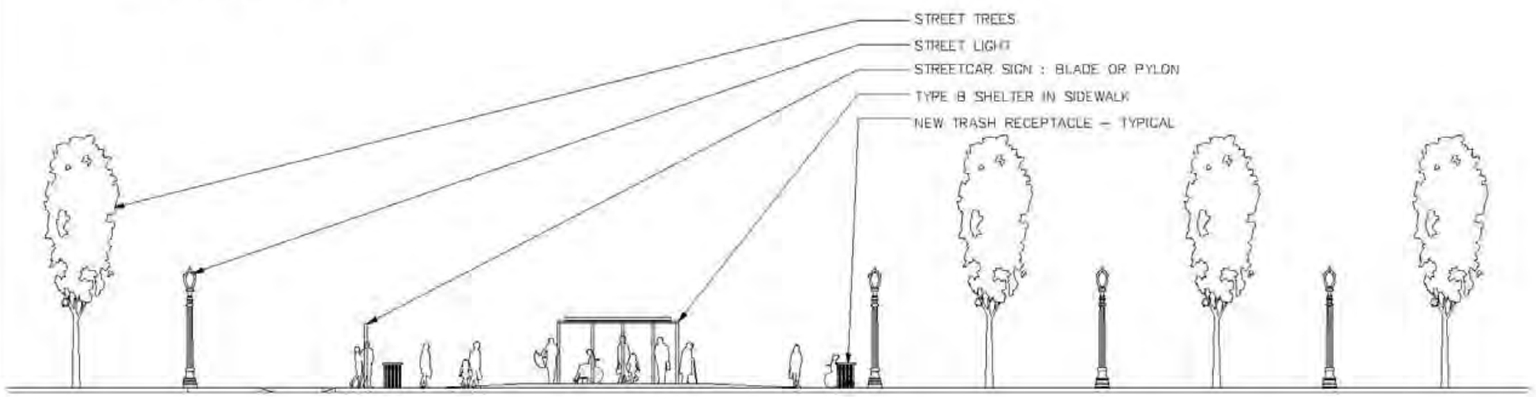

SECTION SIDE CURB STOP (2)
SCALE: 1:20

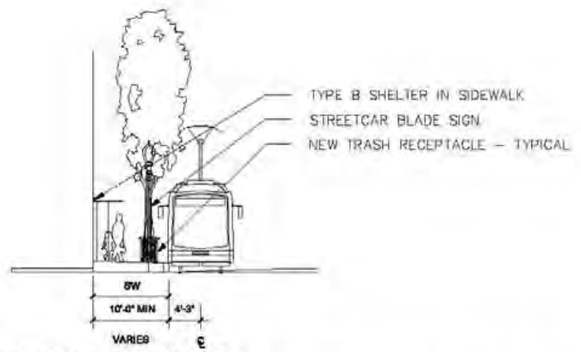

SECTION SIDE CURB STOP (3)
SCALE: 1:20

c:\pwworking\pht\d0539572\A1-3-PlatformPlans_2curbSide.dwg
7/20/2012

			RECOMMENDED: Mohammad Khatak DEPUTY CHIEF ENGINEER	D.C. DEPARTMENT OF TRANSPORTATION
DATE	APPR.		APPROVED: CHIEF TRANSPORTATION ENGINEER	STREETCAR STANDARD DRAWINGS PROTOTYPE PLATFORM TWO SIDE CURBS
	REVISED			PROJECT ENG. DESIGNED BY: CHECKED BY: DRAWN BY: PROJECT MGR. CV DIVISION CHIEF DATE FILE DWG. NO. A-03
ISSUED:		REFERENCE		

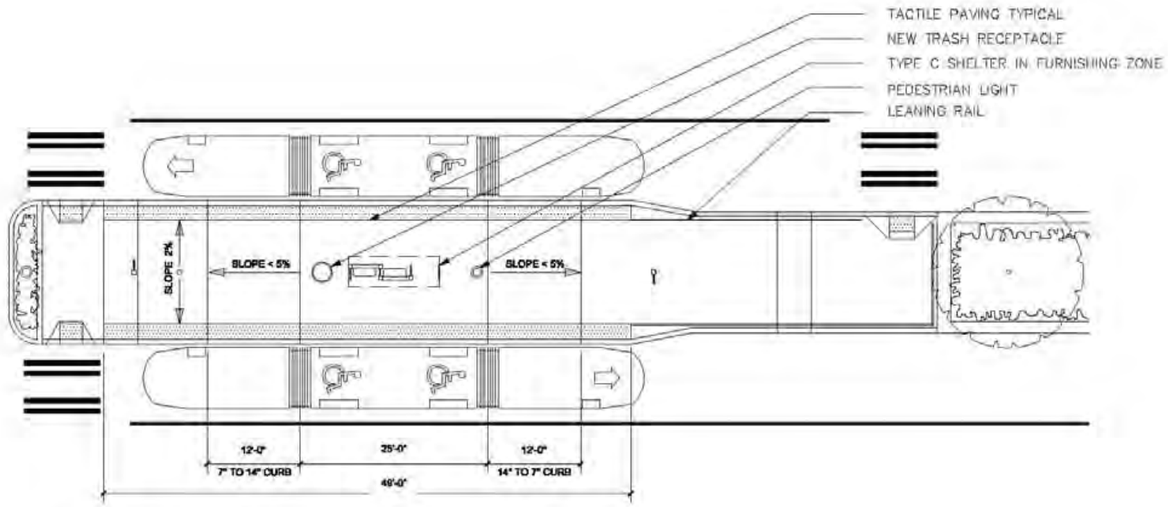

PLAN CENTER MEDIAN (1)
SCALE: 1:20

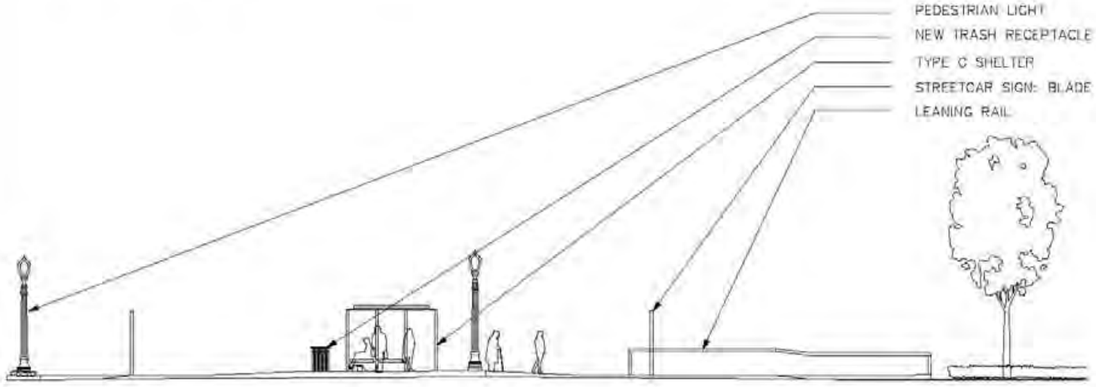

SECTION CENTER MEDIAN (2)
SCALE: 1:20

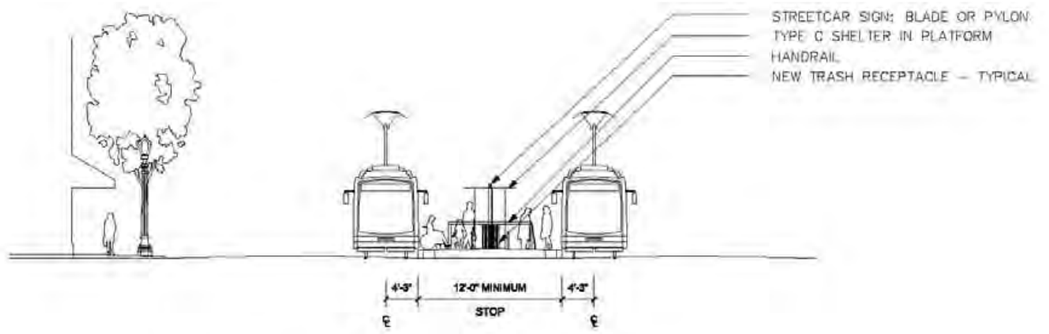

SECTION CENTER MEDIAN (3)
SCALE: 1:20

			RECOMMENDED: Muhammad Khalid DEPUTY CHIEF ENGINEER	D.C. DEPARTMENT OF TRANSPORTATION
DATE	APPR.			STREETCAR STANDARD DRAWINGS
REVISED			APPROVED: [signature] CHIEF TRANSPORTATION ENGINEER	PROTOTYPE PLATFORM CENTER MEDIAN
ISSUED:		REFERENCE		

PROJECT ENG.
DESIGNED BY
CHECKED BY
DRAWN BY
PROJECT MGR. GV
DIVISION CHIEF
DATE
FILE
DWG. NO. A-04

c:\pwworking\plt\d0539372\A1-4-PlatformPlans_3median.dwg
1/20/2012

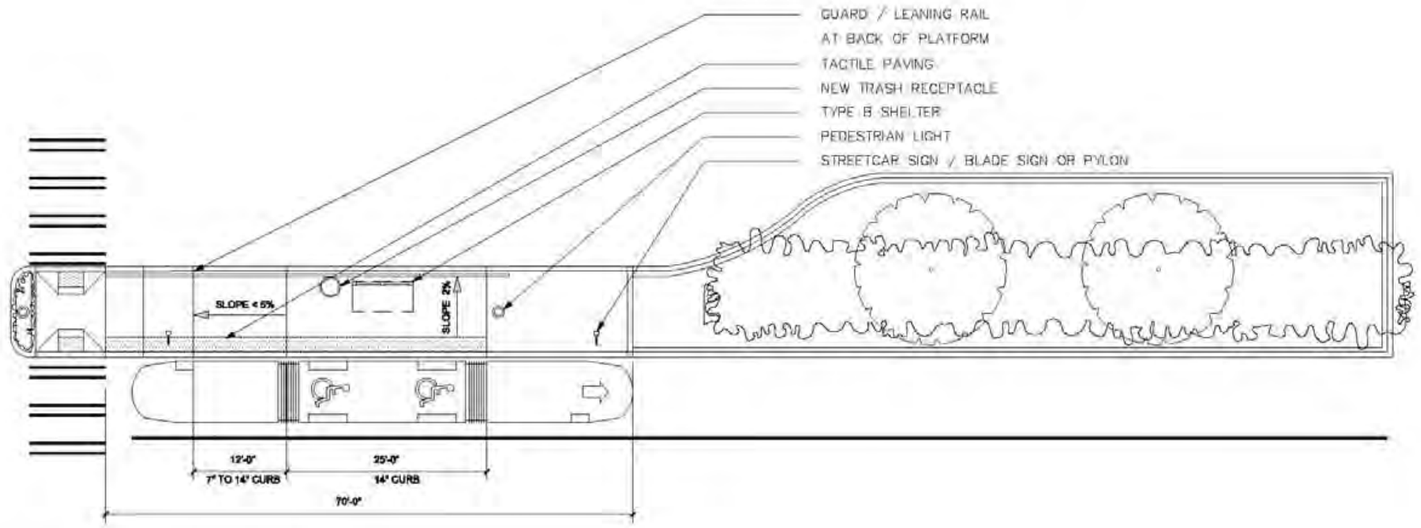

PLAN MEDIAN SPLIT WITH STAGGERED STOPS (1)
SCALE: 1:20

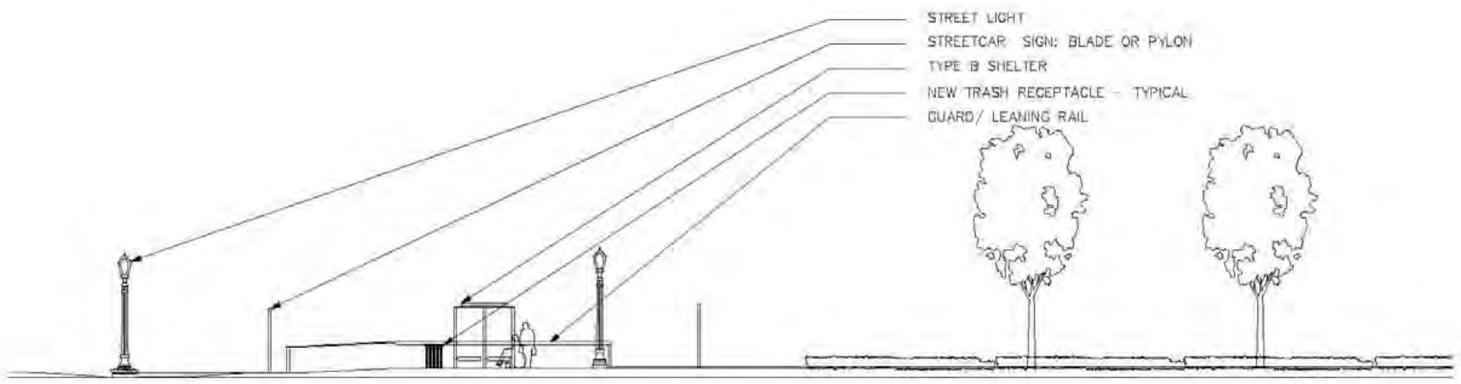

SECTION MEDIAN SPLIT WITH STAGGERED STOPS (2)
SCALE: 1:20

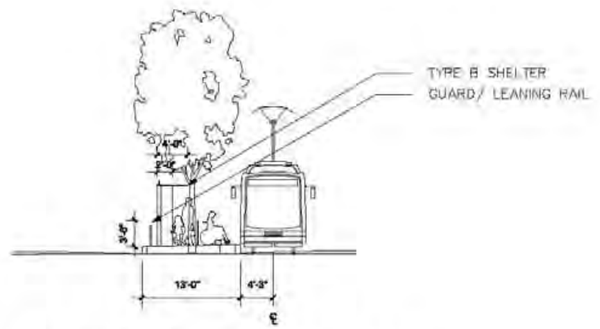

SECTION MEDIAN SPLIT WITH STAGGERED STOPS (3)
SCALE: 1:20

c:\pwworking\plt1\d0539372\A1-5-PlatformPlans_4MedianSplit.dwg
1/20/2012

			RECOMMENDED: Mohammed Khalil DEPUTY CHIEF ENGINEER	D.C. DEPARTMENT OF TRANSPORTATION
DATE	APPR.			
REVISED				STREETCAR STANDARD DRAWINGS
ISSUED:			APPROVED: CHIEF TRANSPORTATION ENGINEER	PROTOTYPE PLATFORM SPLIT MEDIAN
		REFERENCE		

PROJECT ENG.
DESIGNED BY:
CHECKED BY:
DRAWN BY:
PROJECT MGR. GV
DIVISION CHIEF:
DATE:
FILE:
DWG. NO. A-05

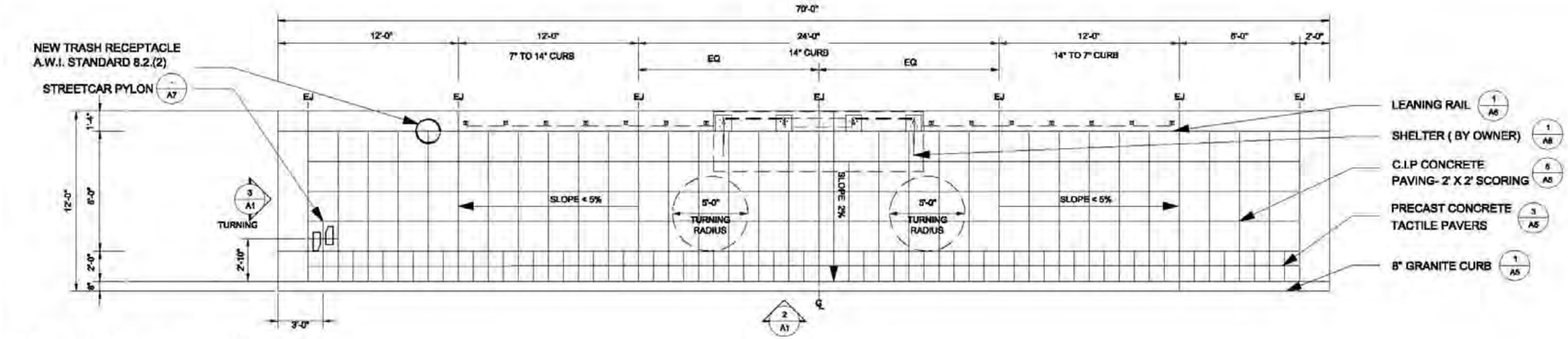

SIDE PLATFORM ELEVATION 1
SCALE: NOT TO SCALE

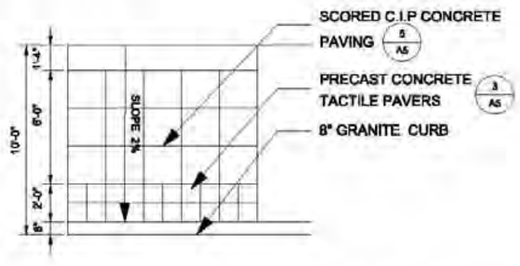

SIDE PLATFORM PARTIAL PLAN - 10 FT WIDE 2
SCALE: 1/8"=1'-0"

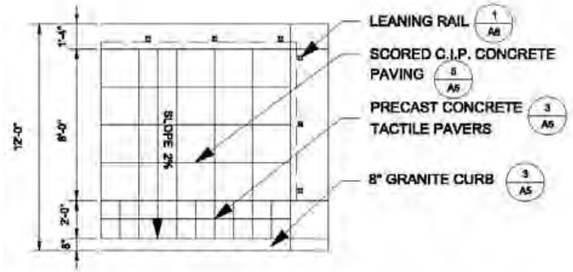

LEANING RAIL AT PLATFORM END - PARTIAL PLAN 5
SCALE: 1/8"=1'-0"

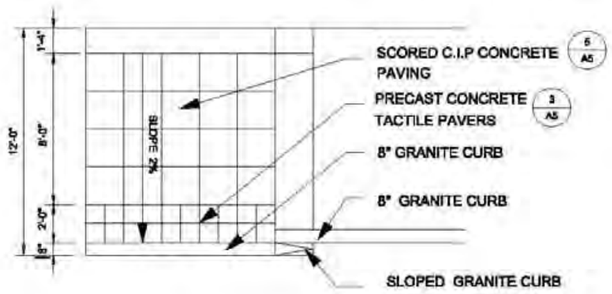

PLATFORM CURB - TRANSITION TO SIDEWALK - PARTIAL PLAN 3
SCALE: 1/8"=1'-0"

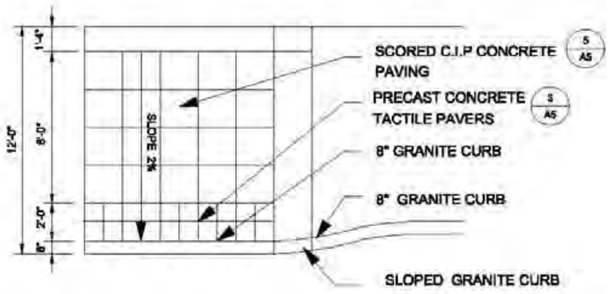

PLATFORM CURB - TRANSITION TO SIDEWALK - PARTIAL PLAN 4
SCALE: 1/8"=1'-0"

			RECOMMENDED: Mohammed Khalid DEPUTY CHIEF ENGINEER	D.C. DEPARTMENT OF TRANSPORTATION STREETCAR STANDARD DRAWINGS	PROJECT ENG. DESIGNED BY CHECKED BY DRAWN BY PROJECT MGR. GV
DATE REVISED ISSUED:	APPR.	REFERENCE	APPROVED: CHIEF TRANSPORTATION ENGINEER	PLATFORM TRANSITION CONDITIONS	DIVISION CHIEF DATE FILE DWG. NO. A-08

c:\pwworking\plt\d0539372\d1-6-PlatformPlans-Side.dwg
1/20/2012

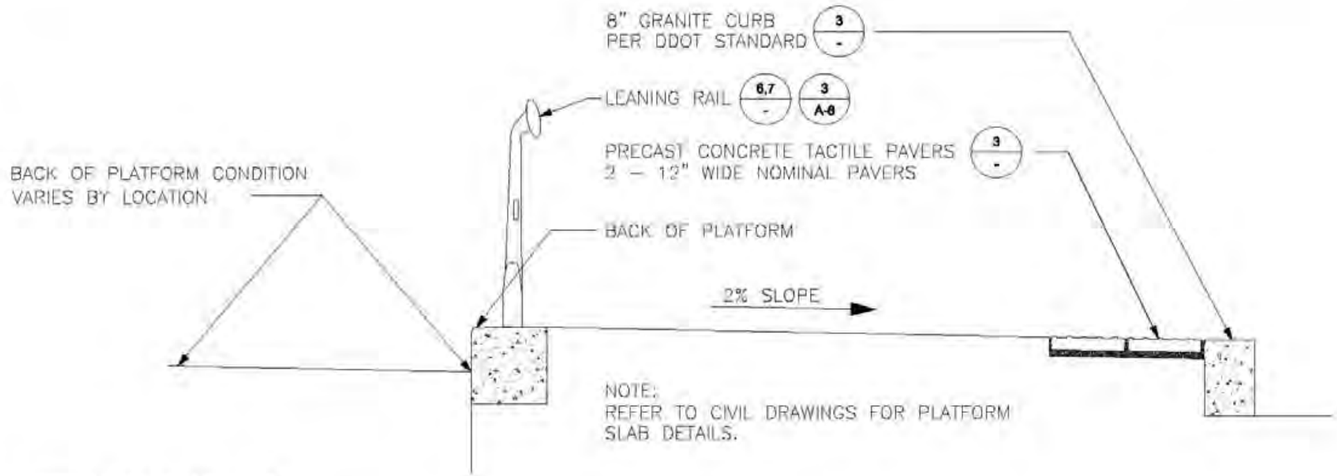

STREETCAR PLATFORM 1
SCALE: 1/2"=1'-0"

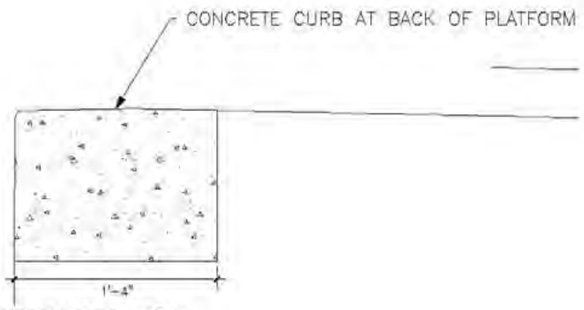

STREETCAR PLATFORM CURB 2
SCALE: 1"=1'-0"

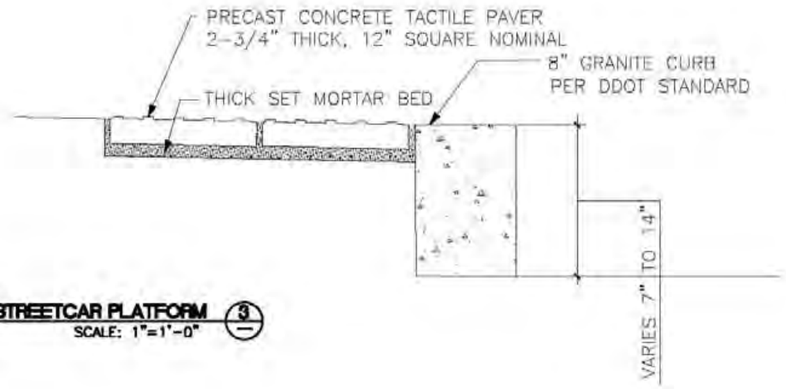

STREETCAR PLATFORM 3
SCALE: 1"=1'-0"

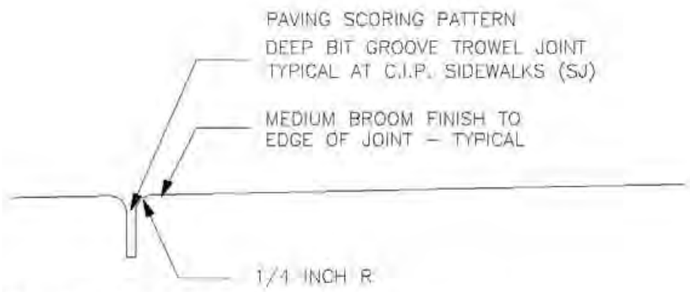

C.I.P. CONTROL JOINT 4
SCALE: 6"=1'-0"

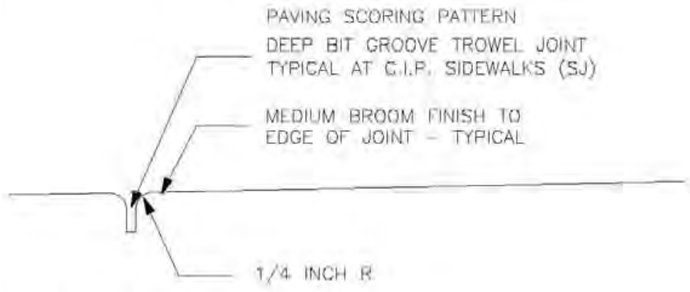

C.I.P. SCORE JOINT 5
SCALE: 6"=1'-0"

			RECOMMENDED: Mohammad Khalid DEPUTY CHIEF ENGINEER	D.C. DEPARTMENT OF TRANSPORTATION
DATE	APPR.		APPROVED: CHIEF TRANSPORTATION ENGINEER	STREETCAR STANDARD DRAWINGS
	REVISED			STREETCAR PLATFORM EDGE DETAILS
ISSUED:		REFERENCE		PROJECT ENG. DESIGNED BY: CHECKED BY: DRAWN BY: PROJECT MGR. GV DIVISION CHIEF DATE FILE DWG. NO. A-07

c:\pwworking\plt\d0539372\A1-7-platform.dwg
1/20/2012

SHELTER AND LEANING RAIL - PERSPECTIVE (1)
SCALE: NOT TO SCALE

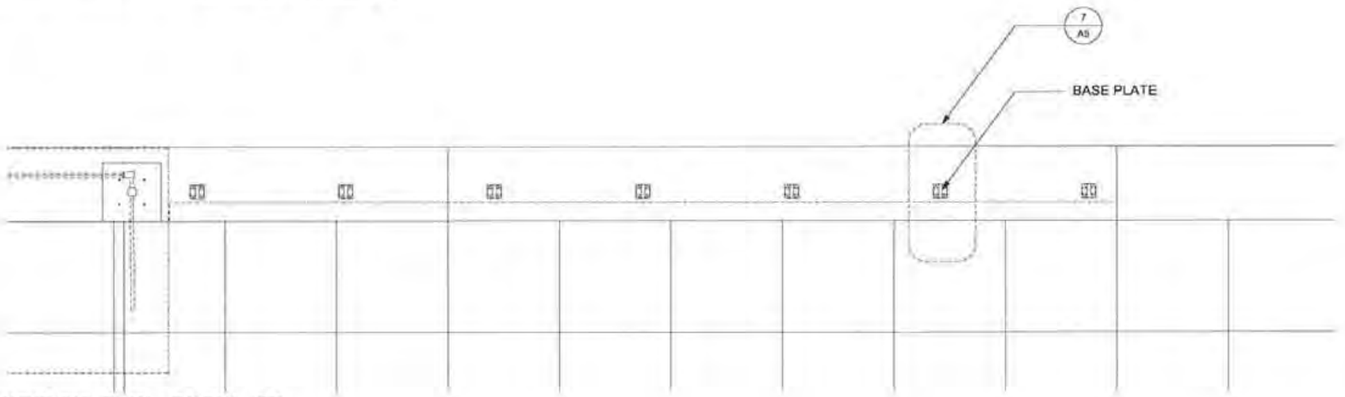

LEANING RAIL PLAN - PARTIAL (2)
SCALE: 1/4"=1'=0"

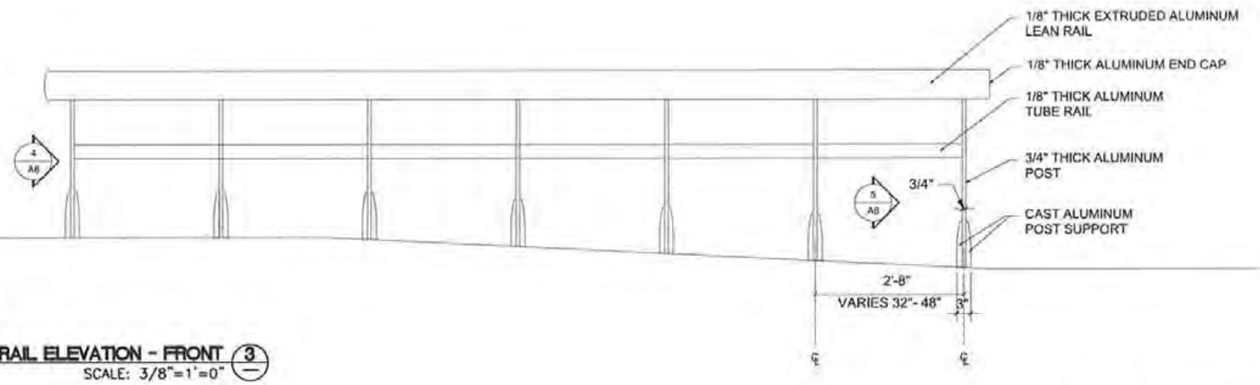

LEANING RAIL ELEVATION - FRONT (3)
SCALE: 3/8"=1'=0"

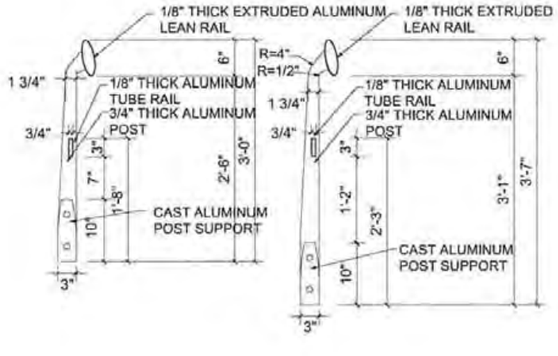

LEANING RAIL SIDE ELEVATION
AT HIGH POINT AND LOW POINT OF PLATFORMS (4)
SCALE: 1/2"=1'=0"

			RECOMMENDED: Muhammad Khalid DEPUTY CHIEF ENGINEER	D.C. DEPARTMENT OF TRANSPORTATION
DATE	APPR.		APPROVED: CHIEF TRANSPORTATION ENGINEER	STREETCAR STANDARD DRAWINGS
REVISED				STREETCAR PLATFORM FURNISHINGS LEANING RAIL PLANS, ELEVATIONS, AND SECTIONS
ISSUED:		REFERENCE		

PROJECT ENG.
DESIGNED BY
CHECKED BY
DRAWN BY
PROJECT MGR. EV
DIVISION CHIEF
DATE
FILE
DWG. NO. A-05

E:\pwworking\plt1\d0539372\plt-8-furnishing.dwg
1/20/2012

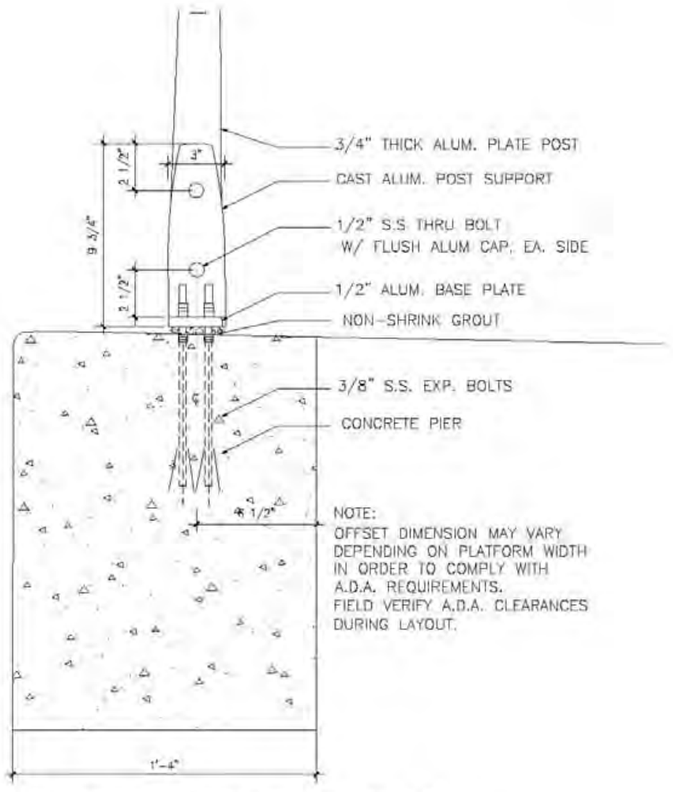

LEANING RAIL INSTALLATION - SECTION (1)
SCALE: 1-1/2"=1'-0"

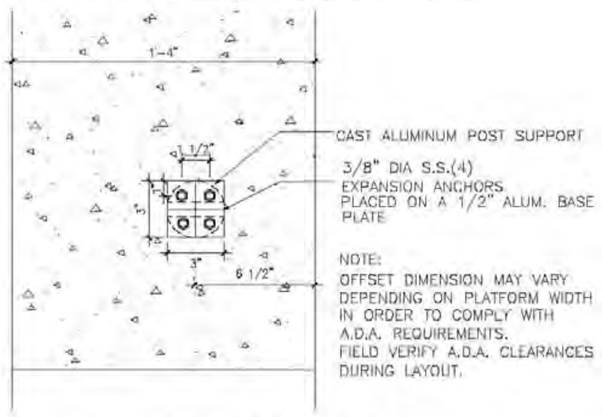

LEANING RAIL INSTALLATION - PLAN (2)
SCALE: 1-1/2"=1'-0"

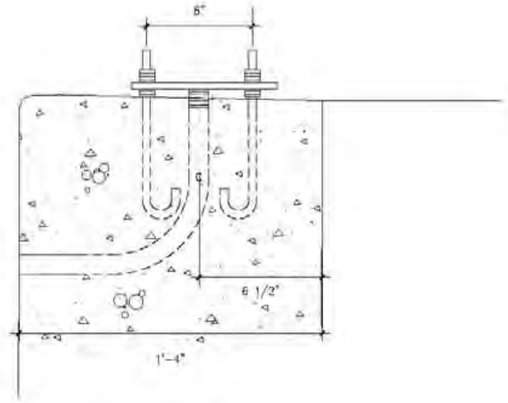

SHELTER BASE PLATE - SECTION (4)
SCALE: 1-1/2"=1'-0"

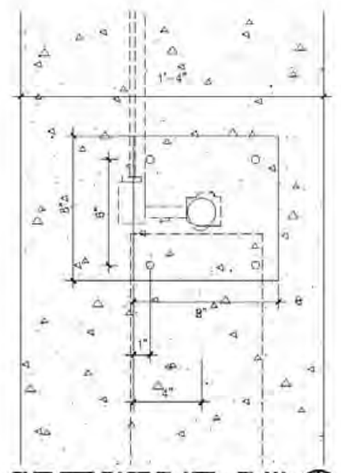

SHELTER BASE PLATE - PLAN (3)
SCALE: 1-1/2"=1'-0"

c:\pwworking\plt1\d0539372\A1-9-leaningrail.dwg
1/20/2012

D.C. DEPARTMENT OF TRANSPORTATION

			RECOMMENDED: Mohammad Khalil DEPUTY CHIEF ENGINEER	STREETCAR STANDARD DRAWINGS	PROJECT ENG. DESIGNED BY: CHECKED BY: DRAWN BY: PROJECT MGR. CV
DATE:	APPR.		APPROVED: CHIEF TRANSPORTATION ENGINEER	STREETCAR PLATFORM LEANING RAIL FOUNDATION AND CURB DETAILS	DIVISION CHIEF DATE: FILE: DWG. NO. A-09
REVISED					
ISSUED:		REFERENCE			

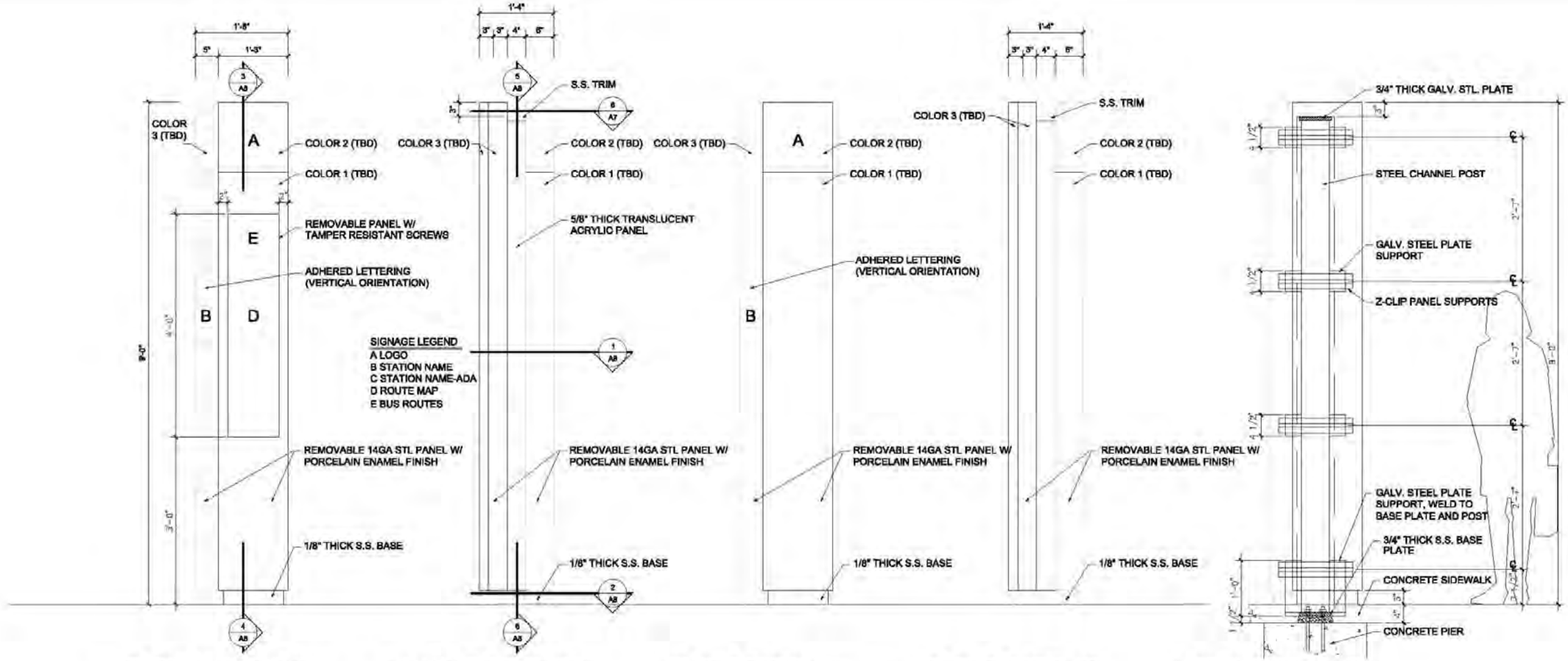

PYLON - ELEVATION 1
SCALE: 1/2"=1'-0"

PYLON - ELEVATION 2
SCALE: 1/2"=1'-0"

PYLON - ELEVATION 3
SCALE: 1/2"=1'-0"

PYLON - ELEVATION 4
SCALE: 1/2"=1'-0"

PYLON - ELEVATION 5
SCALE: 1/2"=1'-0"

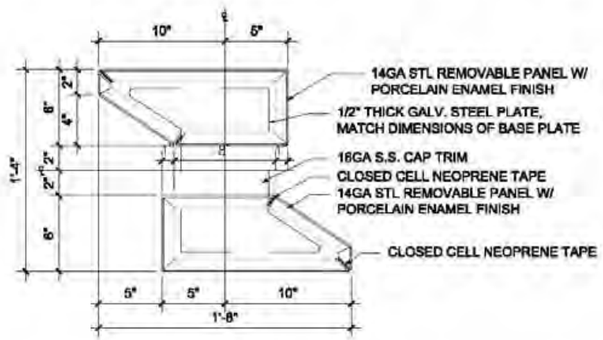

PYLON - PLAN DETAIL - TOP 6
SCALE: 1"=1'-0"

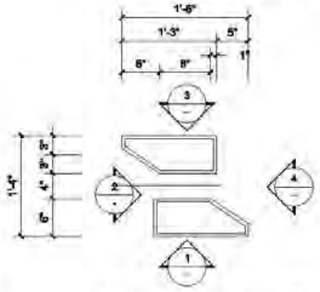

PYLON - KEY PLAN 7
SCALE: 1/2"=1'-0"

D.C. DEPARTMENT OF TRANSPORTATION

			RECOMMENDED: Mohamed Khalil DEPUTY CHIEF ENGINEER	STREETCAR STANDARD DRAWINGS	PROJECT ENG. DESIGNED BY CHECKED BY DRAWN BY PROJECT MGR. GV
DATE	APPR.		APPROVED: CHIEF TRANSPORTATION ENGINEER	STREETCAR PYLON PLANS AND ELEVATIONS	DIVISION CHIEF DATE FILE DWG. NO. A-10
REVISED					
ISSUED:		REFERENCE			

c:\pwworking\plt1\d0539372\d1-10-pylon.dwg
1/20/2012

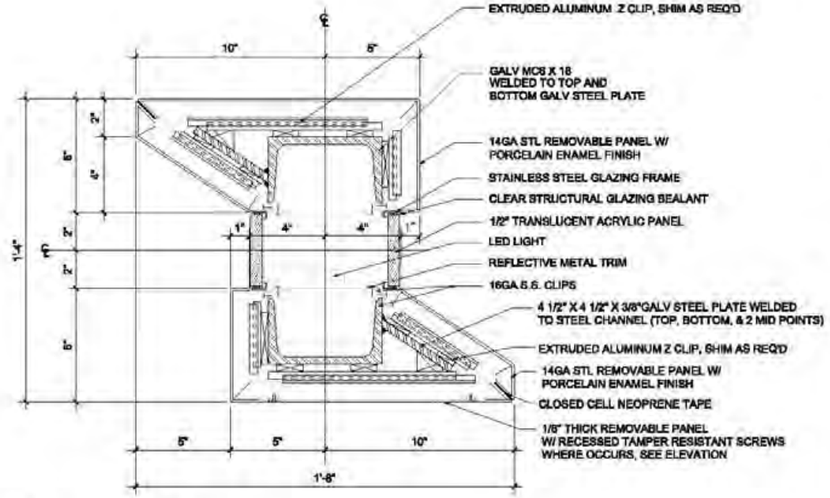

PYLON - PLAN DETAIL - MIDDLE (1)
SCALE: 1-1/2"=1'-0"

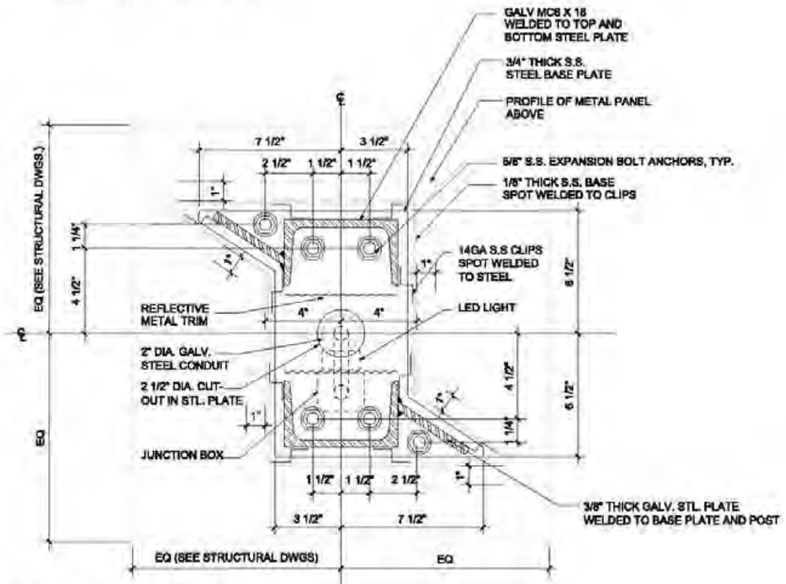

PYLON - PLAN DETAIL - BASE (2)
SCALE: 1-1/2"=1'-0"

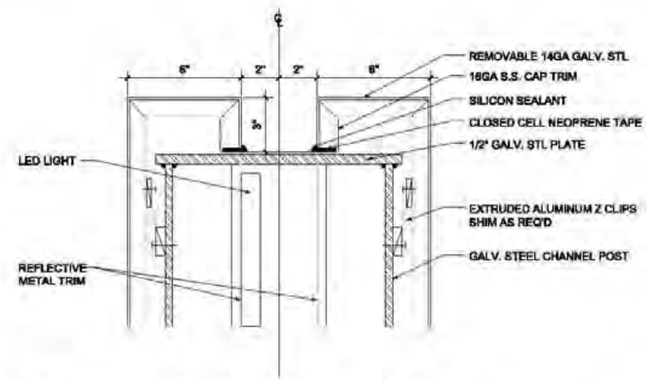

PYLON - SECTION DETAIL AT PANELS- TOP (3)
SCALE: 1-1/2"=1'-0"

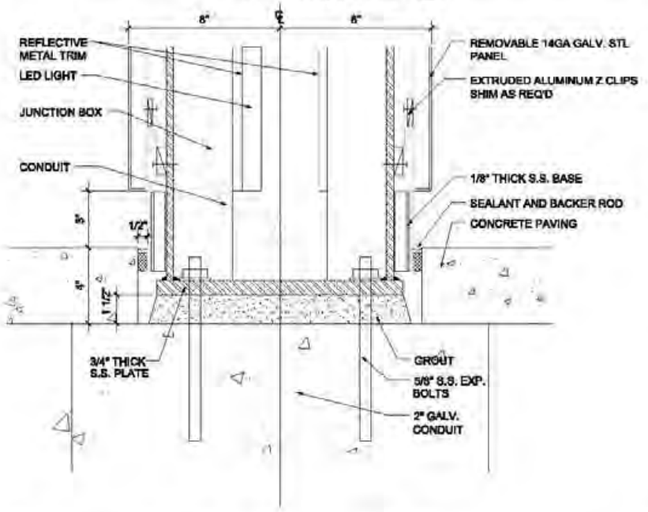

PYLON - SECTION DETAIL AT PANELS- BASE (4)
SCALE: 1-1/2"=1'-0"

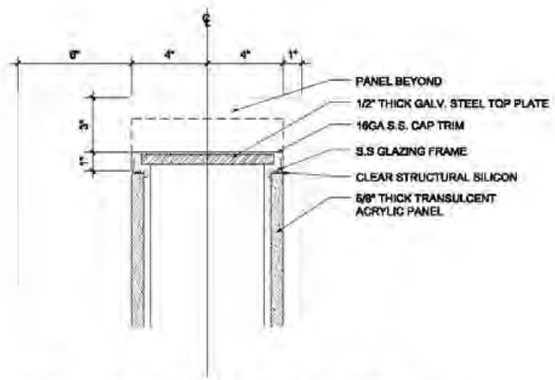

PYLON - SECTION DETAIL AT LIGHT SLOT - TOP (5)
SCALE: 1-1/2"=1'-0"

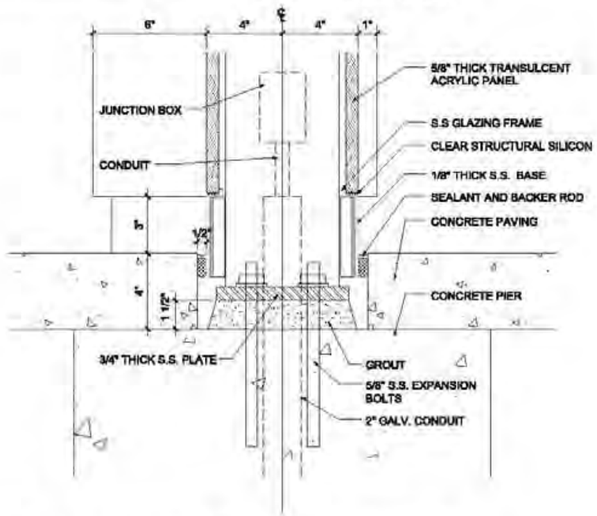

PYLON - SECTION DETAIL AT LIGHT SLOT - BASE (6)
SCALE: 1-1/2"=1'-0"

c:\pwworking\pbtt\d0539372\d1-11-a-pylon.dwg
7/20/2012

D.C. DEPARTMENT OF TRANSPORTATION

DATE	APPR.		
REVISED			
ISSUED:			REFERENCE

RECOMMENDED: _____ DEPUTY CHIEF ENGINEER

APPROVED: _____ CHIEF TRANSPORTATION ENGINEER

STREETCAR STANDARD DRAWINGS

STREETCAR PYLON DETAILS

PROJECT ENG.
DESIGNED BY:
CHECKED BY:
DRAWN BY:
PROJECT MGR. GV

DIVISION CHIEF:
DATE
FILE
DWG. NO. A-11

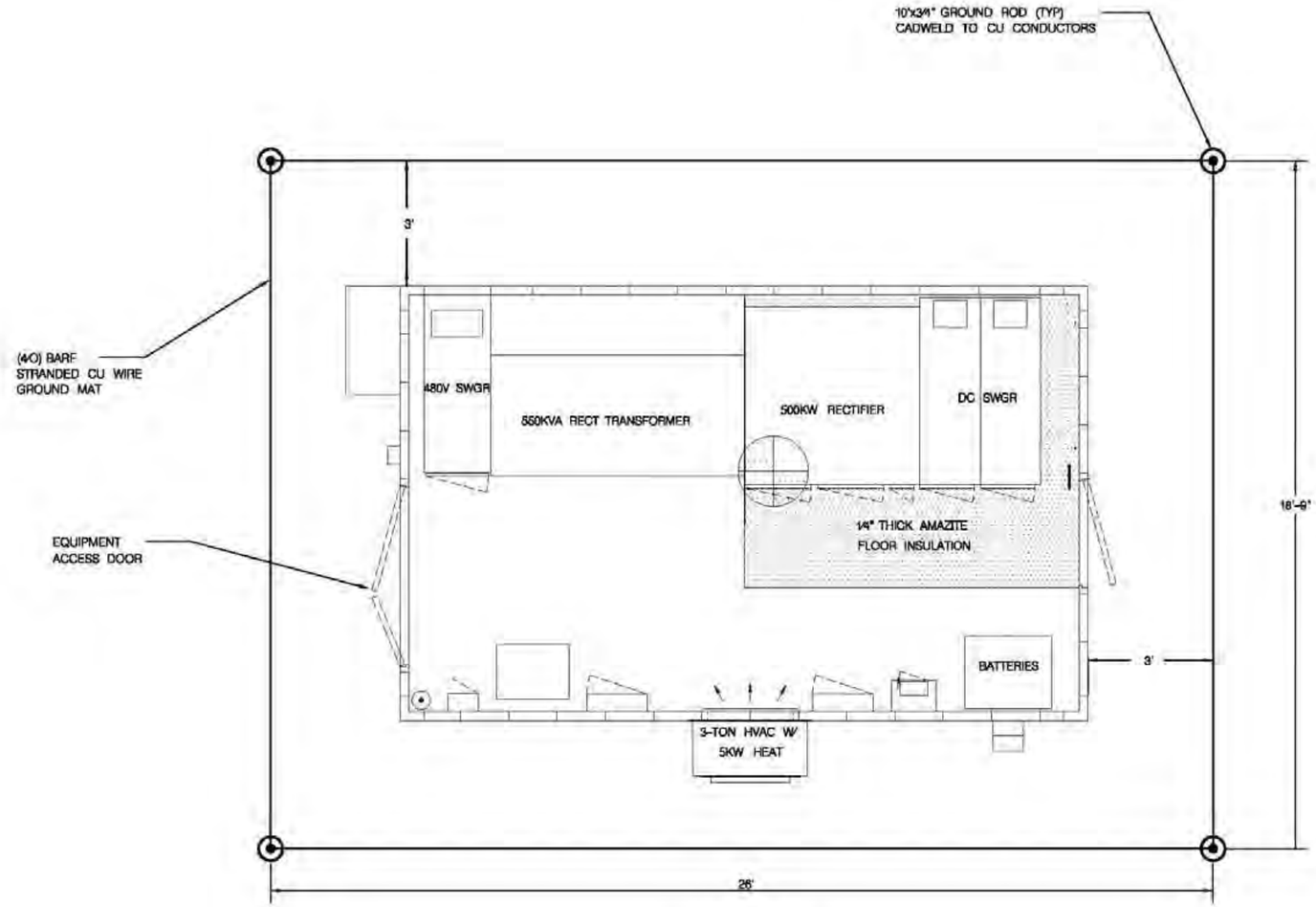

PCR EQUIPMENT LAYOUT

			RECOMMENDED: Mohammad Khalil DEPUTY CHIEF ENGINEER	D.C. DEPARTMENT OF TRANSPORTATION
				STREETCAR STANDARD DRAWINGS
DATE	APPR.		APPROVED: CHIEF TRANSPORTATION ENGINEER	SUBSTATION INSTALLATION SUBSTATION LAYOUT AND GROUNDING PLAN
	REVISED			
ISSUED:		REFERENCE		

PROJECT ENG.
DESIGNED BY
CHECKED BY
DRAWN BY
PROJECT MGR. CV
DIVISION CHIEF
DATE
FILE
DWG. NO. E-01

c:\pwworking\pitt\d0537312\E-02.dgn
12/29/2012

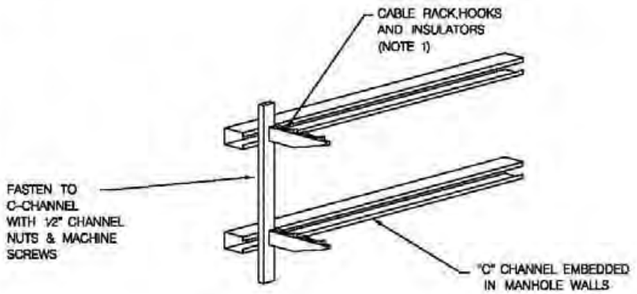

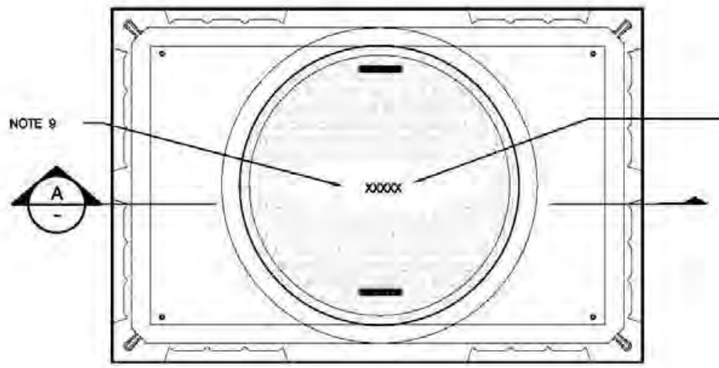

PLAN VIEW

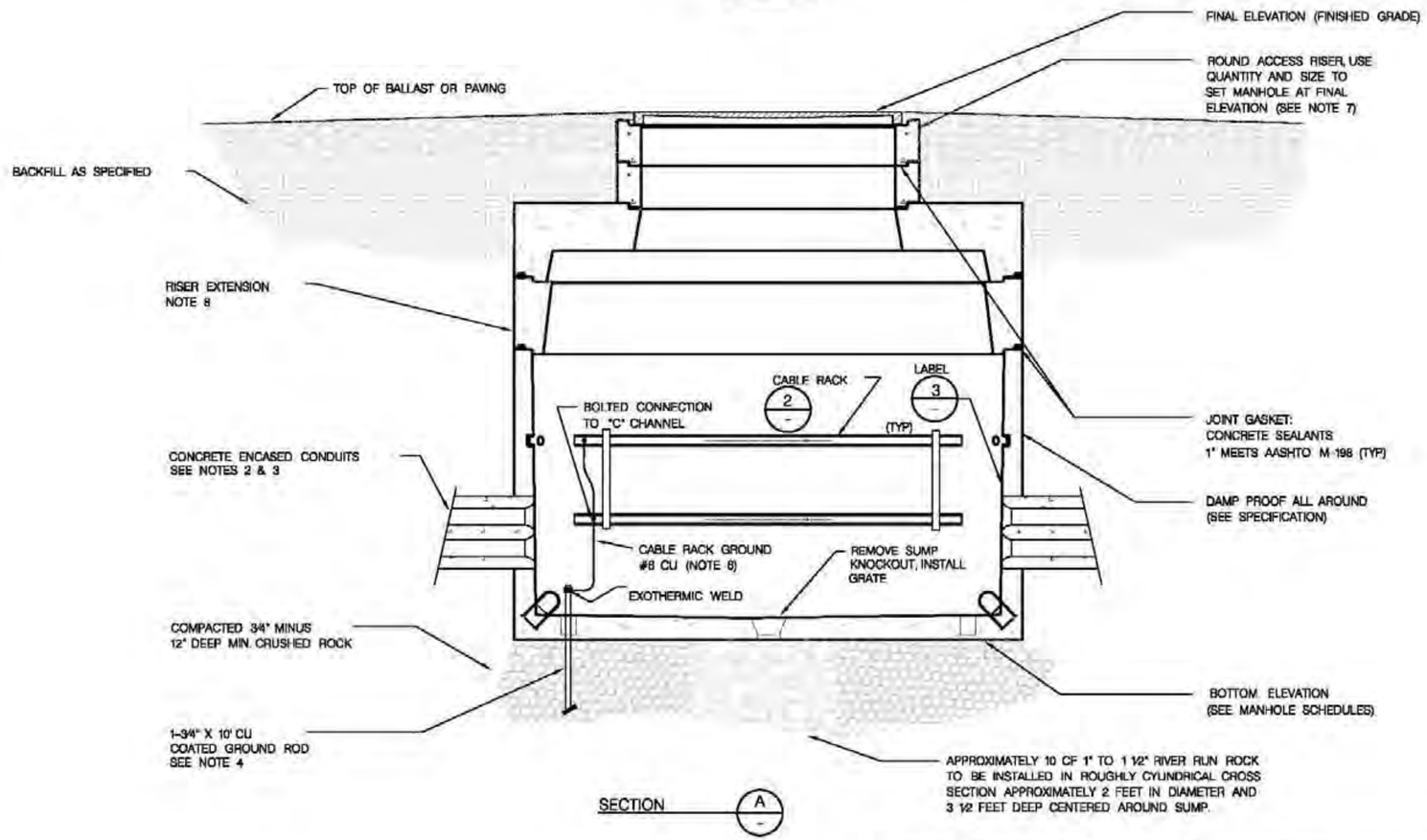

SECTION A

1

NOTES:

1. CABLE RACKS AND INSULATORS SHALL BE FURNISHED WITH MANHOLE AND INSTALLED ON ALL FOUR WALLS; RACKS SHALL BE ADJUSTABLE IN HORIZONTAL AND VERTICAL DIRECTION. SEE MANHOLE DETAILS FOR QUANTITIES.
2. ALL CONDUITS SHALL ENTER MANHOLE KNOCKOUT OR TERMADUCT ONLY AT 90^ TO WALL
3. ALL CONDUITS SHALL SLOPE CONTINUALLY DOWN AT A MINIMUM OF 3" PER 100'-0" TO PROVIDE POSITIVE DRAINAGE TO MANHOLES
4. EXERCISE CAUTION IN INSTALLATION OF GROUND RODS SO DAMAGE TO OTHER UTILITIES DOES NOT OCCUR.
5. CAST IRON COVERS USED FOR TRACTION ELECTRIFICATION SHALL BE MARKED "ELECTRIFICATION".
6. GROUND ALL CABLE RACKS AND CONDUIT GROUNDING BUSHINGS TO GROUND ROD.
7. FOR CAST IRON COVERS USE ROUND ACCESS RISERS TO ACHIEVE FINAL ELEVATION. THE TOTAL HEIGHT OF ALL ROUND ACCESS RISERS INSTALLED ON A MANHOLE SHALL NOT EXCEED 30 INCHES.
8. MANHOLE STATIONING POINT CORRESPONDS TO CENTER POINT OF MANHOLE TOP. (I.E., INTERSECTION OF DIAGONALS)

DATE	APPR.	
REVISED		
ISSUED:		REFERENCE

RECOMMENDED: Mohammad Khalil
DEPUTY CHIEF ENGINEER

APPROVED:
CHIEF TRANSPORTATION ENGINEER

D.C. DEPARTMENT OF TRANSPORTATION

STREETCAR STANDARD DRAWINGS

SYSTEMWIDE ELECTRICAL
HIGH VOLTAGE MANHOLE
INSTALLATION DETAILS

PROJECT ENG.
DESIGNED BY
CHECKED BY
DRAWN BY
PROJECT MGR. CV
DIVISION CHIEF
DATE
FILE
DWG. NO. E-02

c:\pwworking\pitt\d0537312\E-03.dgn
1/29/2012

NOTES:

1. USE PVC ELECTRICAL CONDUIT SPACERS TO MAINTAIN A SPACING OF 1 1/2 " CLEAR BETWEEN CONDUITS FOR SIGNAL/COMMUNICATION AND LV DUCTBANKS. FOR TRACTION ELECTRIFICATION AND HV DUCTBANKS MAINTAIN A SPACING OF 3" CLEAR BETWEEN CONDUITS.
2. INSTALL INTERLOCKING MODULE CONDUIT SPACERS AT 5'-0" ON CENTERS.
3. GROUND COVER OVER TOP OF DUCTBANK SHALL BE A MINIMUM OF 36" UNLESS SPECIFIED OTHERWISE.
4. PROVIDE BACKFILL AND FINISH MATERIALS AS SPECIFIED IN OTHER DIVISIONS OF WORK.
5. TOP OF BALLAST WITHIN TRACKWAY.
6. RED CONCRETE SHALL BE USED FOR ALL TRACTION ELECTRIFICATION AND 15KV DUCTBANK INSTALLATIONS.
7. DUCTBANK REFERENCES SHOWN ARE EXAMPLES ONLY.
8. ALL CONDUITS SHALL BE MANDRILLED, 1/4 " PULL CORDS INSTALLED, AND ENDS CAPPED.

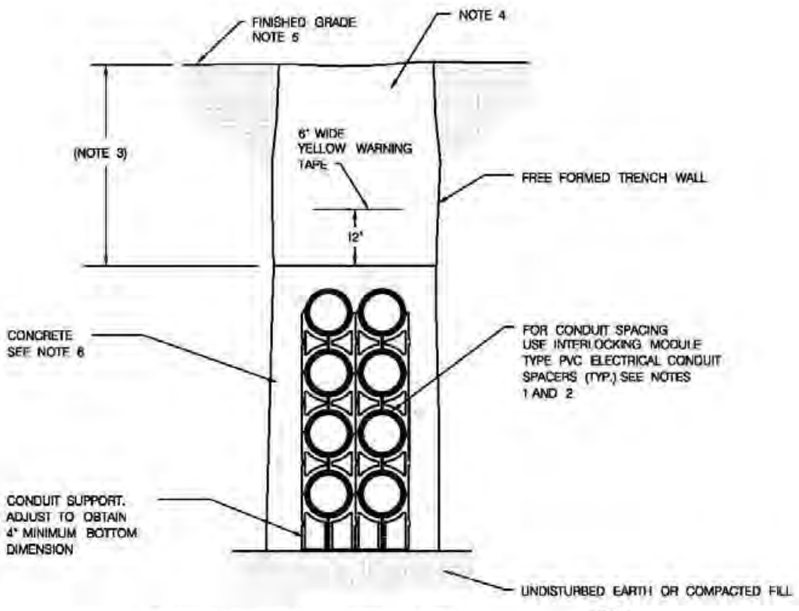

TYPICAL DUCTBANK INSTALLATION — 1
NOT TO SCALE

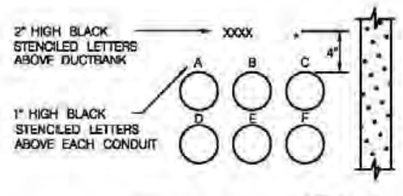

SECTION A

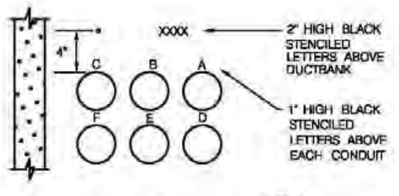

SECTION B

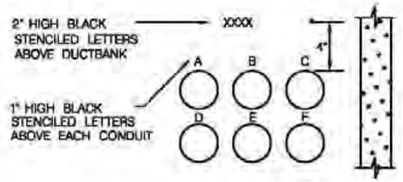

SECTION C

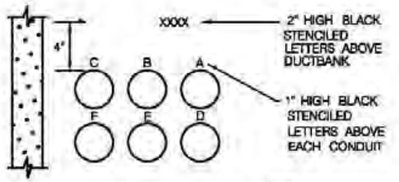

SECTION D

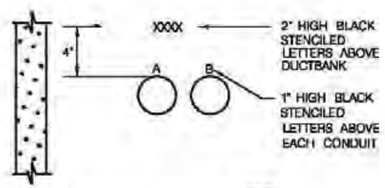

SECTION E

			RECOMMENDED: Mohammad Khalid — DEPUTY CHIEF ENGINEER
			APPROVED: — CHIEF TRANSPORTATION ENGINEER
DATE	APPR.		
REVISED			
ISSUED:			
		REFERENCE	

D.C. DEPARTMENT OF TRANSPORTATION

STREETCAR STANDARD DRAWINGS

SYSTEMWIDE ELECTRICAL CONDUIT INSTALLATION DETAILS

PROJECT ENG.
DESIGNED BY
CHECKED BY
DRAWN BY
PROJECT MGR. CY
DIVISION CHIEF
DATE
FILE
DWG. NO. E-03

c:\pwworking\pit1\d0537315\E-04.dgn
6/29/2012

NOTES:

1. BOND CABLE TO RAIL BY EXOTHERMIC WELD.
2. SEE DRAWING pTP-0028 FOR TRACK BOX DETAIL.

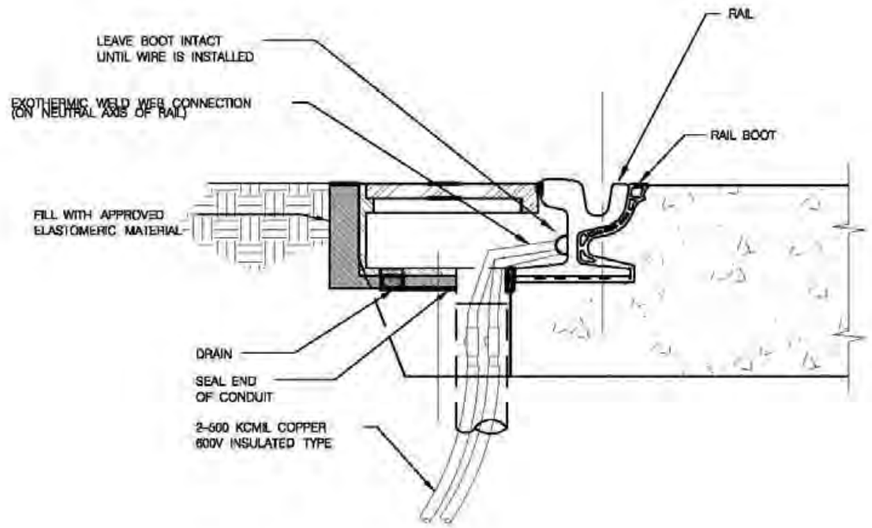

RAIL WEB BOND DETAIL FOR NEGATIVE CONNECTIONS AND CROSS BONDS — 1 / -

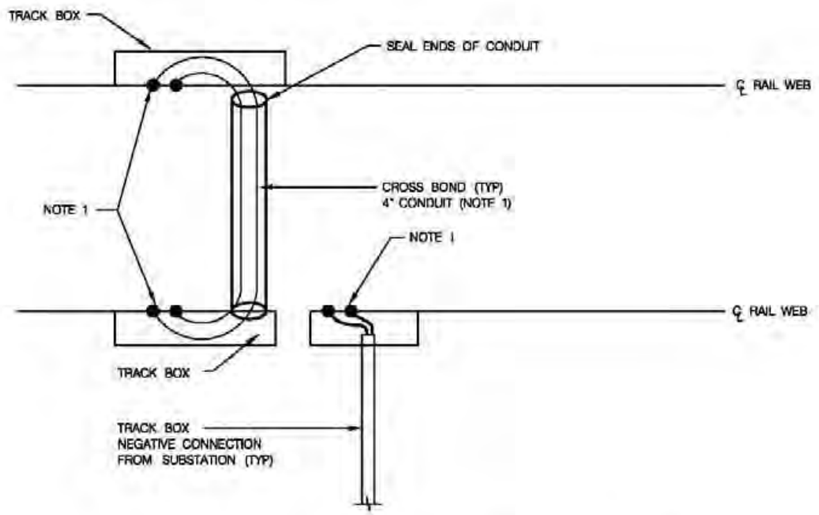

SUBSTATION CROSS BONDING PLAN TYP — 2 / -

c:\pwworking\pitt\d0537312\E-05.dgn
12/07/2012

			RECOMMENDED: Mohammed Khalil — DEPUTY CHIEF ENGINEER	D.C. DEPARTMENT OF TRANSPORTATION
DATE	APPR.		APPROVED: — CHIEF TRANSPORTATION ENGINEER	STREETCAR STANDARD DRAWINGS
REVISED				SYSTEMWIDE ELECTRICAL NEGATIVE CONNECTION TO RAIL
ISSUED:		REFERENCE		DWG. NO. E-04

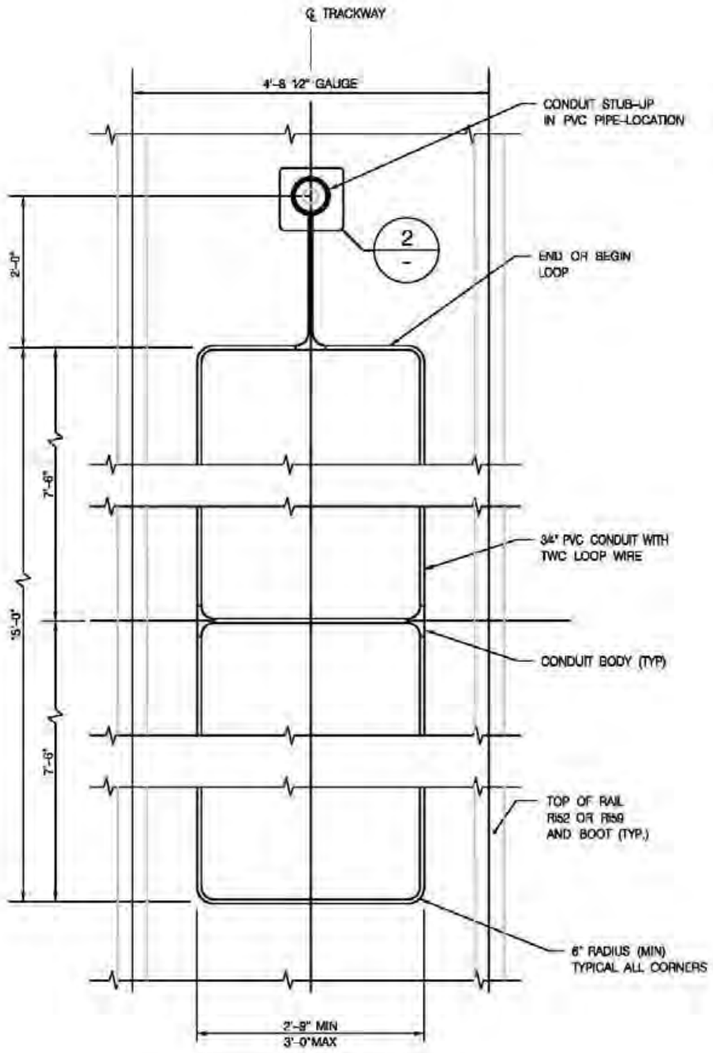

PLAN

TWC LOOP INSTALLATION DETAIL – PAVED TRACK 1

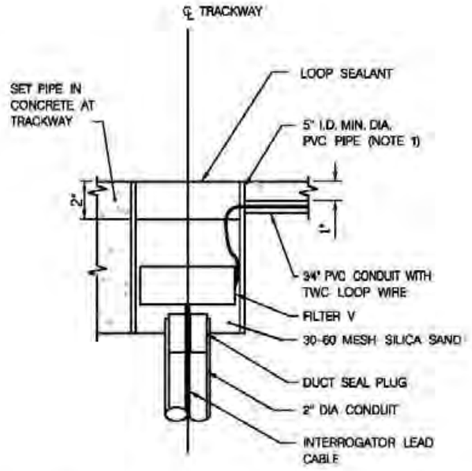

TWC LOOP AT P.C.C. TRACKWAY 2

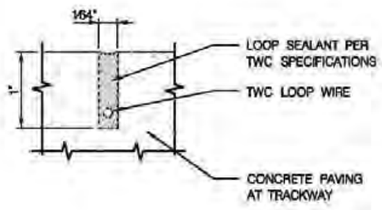

SECTION AT FILTER V 3

c:\pwworking\pitt\d0537315\E-10.dgn
1/20/2012

			RECOMMENDED: Mohammad Khalil, DEPUTY CHIEF ENGINEER	D.C. DEPARTMENT OF TRANSPORTATION
DATE	APPR.		APPROVED: CHIEF TRANSPORTATION ENGINEER	STREETCAR STANDARD DRAWINGS
REVISED				TRAIN TO WAYSIDE COMMUNICATION TWC INSTALLATION DETAILS
ISSUED:		REFERENCE		

PROJECT ENG.
DESIGNED BY
CHECKED BY
DRAWN BY
PROJECT MGR. CV
DIVISION CHIEF
DATE
FILE
DWG. NO E-05

GENERAL NOTES

1. THE DRAWINGS FOR THE OVERHEAD CONTACT SYSTEM IN A PROJECT CONSIST OF BOTH SITE SPECIFIC DRAWINGS AND STANDARD DRAWINGS. ADDITIONALLY, THEY ARE TO BE READ IN CONJUNCTION WITH THE SPECIFICATIONS AND REFERENCED STANDARD DRAWINGS.
2. INSTALLATION OF THE OVERHEAD CONTACT SYSTEM SHALL BE IN ACCORDANCE WITH THE REQUIREMENTS OF THE SPECIFICATIONS, NATIONAL ELECTRICAL SAFETY CODE (NESC) AND THE APPLICABLE DISTRICT OF COLUMBIA.
3. ALL OVERHEAD CONTACT SYSTEM EQUIPMENT AND ASSEMBLIES SHALL CLEAR ALL APPROPRIATE CLEARANCE ENVELOPES AND ELECTRICAL CLEARANCE REQUIREMENTS. REFER TO DRAWINGS OCT-08 THROUGH OCT-11 WHEN DETERMINING PANTOGRAPH CLEARANCE REQUIREMENTS.
4. ALL FIELD CONNECTIONS SHALL BE BOLTED UNLESS OTHERWISE NOTED. BOLT HOLES SHALL BE SIZED TO CLEAR BOLTS WITH ALLOWANCE FOR PURPOSE, BOLT DIAMETER, AND GALVANIZING THICKNESS.
5. AESTHETICS SHALL BE A MAJOR CONSIDERATION OF THE DESIGN IN ORDER TO MINIMIZE VISUAL IMPACT. WELL BLENDED ASSEMBLIES AND COMPONENTS ARE DESIRED. ALL MATERIAL, ASSEMBLIES AND COMPONENTS ARE SUBJECT TO APPROVAL OF THE DISTRICT.
6. UNLESS OTHERWISE NOTED, ALL MISCELLANEOUS STEEL BRACKETS, FASTENERS AND FITTINGS SHALL BE DESIGNED AND MANUFACTURED, WELDED AND GALVANIZED IN ACCORDANCE WITH THE SPECIFICATIONS.

STANDARD DRAWINGS

1. STANDARD DRAWINGS INCLUDE TECHNICAL SHEETS, TYPICAL SPAN DRAWINGS, TYPICAL STRUCTURE DRAWINGS, AND ASSEMBLY DRAWINGS.
2. TECHNICAL SHEET DRAWINGS PROVIDE BASIC AND DEVELOPED DATA RELATING TO THE OVERHEAD CONTACT SYSTEM AND ITS RELATIONSHIP WITH OTHER EQUIPMENT AND SYSTEMS.
3. GENERAL ARRANGEMENT DRAWINGS TYPICALLY DEFINE AND SHOW THE REQUIRED RELATIONSHIP BETWEEN MULTIPLE SPANS OF WIRING AND MULITPLE STRUCTURES.
4. TYPICAL SPAN DRAWINGS SHOW CONTACT WIRE SPANS AND THE RELATIONSHIP BETWEEN VARIOUS OCS ASSEMBLIES NEEDED TO FIT OUT EACH SPAN OF A GIVEN TYPE.
5. TYPICAL STRUCTURE DRAWINGS SHOW A CROSS SECTION VIEW OF INDIVIDUAL STRUCTURE TYPES AND THE RELATIONSHIP BETWEEN VARIOUS OCS ASSEMBLIES NEEDED TO FIT OUT THE STRUCTURE.
6. STANDARD ASSEMBLY DRAWINGS SHOW ONE OR MORE ASSEMBLIES OF GENERIC PARTS WITH REQUIRED DIMENSIONS, INSTALLATION REQUIREMENTS AND A BILL OF MATERIALS TABLE. ASSEMBLIES ARE IDENTIFIED BY DISCRETE REFERENCE NUMBERS.
7. THE DETAILING OF ASSEMBLIES SHALL BE THE RESPONSIBILITY OF THE CONTRACTOR. UNLESS OTHERWISE NOTED, CONTRACTORS AND SUPPLIERS ARE ENCOURAGED TO PROVIDE THEIR OWN STANDARD ASSEMBLIES AND COMPONENTS PROVIDED THAT THEY MEET THE REQUIREMENTS FOR PURPOSE, DIMENSIONAL PERFORMANCE AND SPECIFICATION. DETAILING SHALL INCLUDE PARTS IDENTIFICATION AND BILL OF MATERIALS TABLE.
8. CONSISTENCY OF ASSEMBLIES AND PARTS SHALL BE MAINTAINED FOR ALL APPLICATIONS THROUGHOUT THE PROJECT.
9. THE LOADING VALUES SHOWN ON STANDARD ASSEMBLY DRAWINGS ARE FOR INFORMATION ONLY. SUCH VALUES MAY HAVE FORMED THE BASIS FOR ASSEMBLIES CALLED FROM OTHER DRAWINGS. THE CONTRACTOR SHALL DETERMINE AND RECORD THE ACTUAL LOADING CAPACITIES FOR THE ASSEMBLIES AND COMPONENTS TO BE PROVIDED.

D.C. DEPARTMENT OF TRANSPORTATION

DATE	APPR.	
REVISED		
ISSUED:		REFERENCE

RECOMMENDED: _____ DEPUTY CHIEF ENGINEER

APPROVED: _____ CHIEF TRANSPORTATION ENGINEER

STREETCAR STANDARD DRAWINGS

GENERAL NOTES FOR OCS DRAWINGS

PROJECT ENG.
DESIGNED BY
CHECKED BY
DRAWN BY
PROJECT MGR. CY

DIVISION CHIEF
DATE
FILE
DWG. NO. OCT-01

c:\pwworking\pht\ad63732\d0170100.dgn
4/20/2012

OVERHEAD CONTACT ABBREVIATIONS

A

AB	ANCHOR BOLT
ABUT	ABUTMENT
AC	ALTERNATING CURRENT
ACI	AMERICAN CONCRETE INSTITUTE
ACSR	ALUMINUM CONDUCTOR, STEEL REINFORCED
ADJ	ADJACENT
AG	AT GRADE
AISC	AMERICAN INSTITUTE OF STEEL CONSTRUCTION
AL	ALUMINUM
ANC	ANCHOR
APPROX	APPROXIMATE
AREMA	AMERICAN RAILWAY ENGINEERING AND MAINTENANCE OF WAY ASSOCIATION
ASSY	ASSEMBLY
ASTM	AMERICAN SOCIETY OF TESTING & MATERIALS
AT	AUTO TENSION
ATM	ALONG TRACK MOVEMENT
ATR	ABOVE TOP RAIL
AVG	AVERAGE
AWG	AMERICAN WIRE GAUGE
AWS	AMERICAN WELDING SOCIETY

B

B/B	BACK TO BACK
BIL	BASIC INSULATION LEVEL
BLDG	BUILDING
BRKT	BRACKET
B-SPAN	BODY SPAN
BW	BALANCE WEIGHT
BWA	BALANCE WEIGHT ANCHOR
BZ	BRONZE

C

CANT	CANTILEVER
CAT.	CATENARY
CB	CIRCUIT BREAKER
CF	CUBIC FEET
CHAM	CHAMFER
℄	CENTERLINE
C TO C	CENTERLINE TO CENTERLINE
CLR	CLEARANCE, CLEAR
COMM	COMMUNICATIONS
CONC	CONCRETE
COND	CONDUCTOR
CONTR	CONTRACTOR
CS	CURVE-TO-SPIRAL
CTR	CENTER
CU	COPPER
CW	CONTACT WIRE
CY	CUBIC YARD

D

DB	DIRECT BURIED
DC	DIRECT CURRENT
DEG	DEGREE
DET	DETAIL
DGA	DOWN GUY ANCHOR
DIA	DIAMETER
DIM.	DIMENSION
DISC	DISCONNECT
DISC SW	DISCONNECT SWITCH
DOC	DEGREE OF CURVATURE
DWG	DRAWING

E

E	EAST
EA	EACH
EB	EASTBOUND
Ea	SUPERELEVATION IN INCHES
EHS	EXTRA HIGH STRENGTH
ELEC	ELECTRICAL
EL	ELEVATION
EQ	EQUAL
EQN	EQUATION
ES	EXTRA STRENGTH
ETC	ET CETERA
EXIST	EXISTING

F

F	FAHRENHEIT
FAC	FACILITY
FDN	FOUNDATION
FDR	FEEDER
FREQ	FREQUENCY
FOP	FACE OF POLE
F.O.S.	FACTOR OF SAFETY
FT	FEET, FOOT
F TO F	FACE TO FACE
F/T	FIXED TERMINATION (F.T.)
FA	FIXED ANCHOR
FTG	FOOTING
FUT	FUTURE

G

GALV	GALVANIZED
GND	GROUND
GRS	GALVANIZED RIGID STEEL
GRSC	GALVANIZED RIGID STEEL CONDUIT

H

H.D.	HARD DRAWN
HH	HANDHOLE
HEX	HEXAGONAL
HORIZ	HORIZONTAL
H.R.L.	HIGH RAIL LEVEL
H-SPAN	HEAD SPAN
HSS	HIGH STRENGTH STEEL
HT	HEIGHT
HV	HIGH VOLTAGE
HWY	HIGHWAY
Hz	HERTZ

I

I	INTERLOCK
IB	INBOUND
ID	INSIDE DIAMETER
IEEE	INSTITUTE OF ELECTRICAL AND ELECTRONICS ENGINEERS
IN.	INCH, INCHES
IJ	INSULATED JOINT
INCL	INCLUDE, INCLUDING
INSUL	INSULATION
I.R.	IN RUNNING

J

J	JUMPER
JCT	JUNCTION

K

K	KIP
KCMIL	THOUSAND CIRCULAR MILS
kA	KILOAMPERE
kV	KILOVOLT
kVA	KILOVOLT AMPERE
KSF	KIPS PER SQUARE FOOT
KSI	KIPS PER SQUARE INCH
kW	KILOWATT

L

LB	POUND, POUNDS
LBF	POUNDS FORCE
LB/FT	POUNDS PER FOOT
LG	LONG, LENGTH
LOC	LOCATION
LS	LUMP SUM OR LINE SECTION

M

M	METER (AS A UNIT OF LENGTH)
MAX	MAXIMUM
MW	MESSENGER WIRE
MH	MANHOLE
MIN	MINIMUM
MISC	MISCELLANEOUS
ML	MAIN LINE
MPA	MID POINT ANCHOR
MPH	MILES PER HOUR

N

N	NORTH
N/A	NOT APPLICABLE
NB	NORTH BOUND
NBR	NON-BRIDGING
NC	NORMALLY CLOSED
NEC	NATIONAL ELECTRICAL CODE
NEG	NEGATIVE
NESC	NATIONAL ELECTRICAL SAFETY CODE
NIC	NOT IN CONTRACT
NO	NORMALLY OPEN
No.	NUMBER
NOM	NOMINAL
NRN	NON-REVENUE NORTHBOUND
NRS	NON-REVENUE SOUTHBOUND
N.R.	NOT REGISTERED
N.S.	NOT SUPPORTED
N.S.R.	NOT SUPPORTED OR REGISTERED
N-SW	NEGATIVE SWITCH
NTS	NOT TO SCALE

O

OCS	OVERHEAD CONTACT SYSTEM
OB	OUTBOUND
OD	OUTSIDE DIAMETER
OH	OVERHEAD
OHB	OVERHEAD BRIDGE
OL	OVERLAP
OR	OUT OF RUNNING

P

PC	POINT OF CURVE
PF	POINT OF FROG
PGRS	POLYVINYL COATED GALVANIZED RIGID STEEL
PH	PHASE
PI	POINT OF INTERSECTION
PITO	POINT OF INTERSECTION OF TURNOUT
PL	PLATE
PLAT.	PLATFORM
PROP	PROPOSED
PS	POINT OF SWITCH
PSF	POUNDS PER SQUARE FEET
PSI	POUNDS PER SQUARE INCH
P-SW	POSITIVE SWITCH
PT	POINT OF TANGENT
PVC	POLYVINYL CHLORIDE OR POINT OF VERTICAL CURVE
PWR	POWER

Q

QTY	QUANTITY

R

R	RADIUS
RCP	REINFORCED CONCRETE PIPE
RECT	RECTIFIER
REF	REFERENCE
REV	REVISE, REVISION
REQD	REQUIRED
ROW	RIGHT OF WAY
RR	RAILROAD

S

S	SOUTH
SA	SURGE ARRESTOR
SB	SOUTHBOUND
SECT	SECTION
SC	SPIRAL TO CURVE
SCAT	SIMPLE CATENARY AUTO TENSION
SCFT	SIMPLE CATENARY FIXED TERMINATION
SCH	SCHEDULE
SI	SECTION INSULATOR
SIG.	SIGNAL
SOP	SET OUT POINT
SPEC	SPECIFICATION
SPS	SMALL PART STEELWORK
SPST	SINGLE POLE SINGLE THROW
SQ	SQUARE
Sq Ft	SQUARE FEET
Sq In	SQUARE INCHES
S-SPAN	STEADY SPAN
SST	STAINLESS STEEL
ST	SPIRAL TO TANGENT
STA	STATION, STATIONING
STD	STANDARD
STRUCT	STRUCTURE
SW	SWITCH
SWAT	SINGLE WIRE AUTO TENSIONED
SWFT	SINGLE WIRE FIXED TERMINATION

T

TBD	TO BE DETERMINED
TEMP	TEMPORARY
TERM.	TERMINAL, TERMINATION
T.O.F.	TOP OF FOUNDATION
T/LR	TOP OF LOW RAIL
TO.	TURNOUT
TOC	TOP OF CONCRETE
TPSS	TRACTION POWER SUBSTATION
T/R	TOP OF RAIL
TRK	TRACK
TS	TANGENT TO SPIRAL
TWA	TIE WIRE ANCHOR
TYP	TYPICAL
T/L	TENSION LENGTH

U

UG	UNDERGROUND
UGB	UNDERGRADE BRIDGE
UNO	UNLESS NOTED OTHERWISE
U/S	UNDERSIDE
UTIL	UTILITY

V

V	VOLT
VA	VOLT AMPS
VERT	VERTICAL
VS	VERSINE

W

W	WITH
WB	WESTBOUND
WO	WITHOUT
WF	WIDE FLANGE
WWF	WELDED WIRE FABRIC

X

X-ING	CROSSING
XOVER	CROSSOVER
X-SECT	CROSS SECTION
X-SPAN	CROSS SPAN

Y

YRD	YARD
YL	YARD LEAD

D.C. DEPARTMENT OF TRANSPORTATION

DATE	APPR.	
REVISED		
ISSUED:		REFERENCE

RECOMMENDED: Mohammad Khalil
DEPUTY CHIEF ENGINEER

APPROVED:
CHIEF TRANSPORTATION ENGINEER

STREETCAR STANDARD DRAWINGS

OVERHEAD CONTACT SYSTEM ABBREVIATIONS ON OCS DRAWINGS

PROJECT ENG.
DESIGNED BY:
CHECKED BY:
DRAWN BY:
PROJECT MGR. CY

DIVISION CHIEF
DATE:
FILE:
DWG. NO. OCT 02

c:\projects\pit\1\design\3\3\3\OCT-02.dgn
2012/03/1

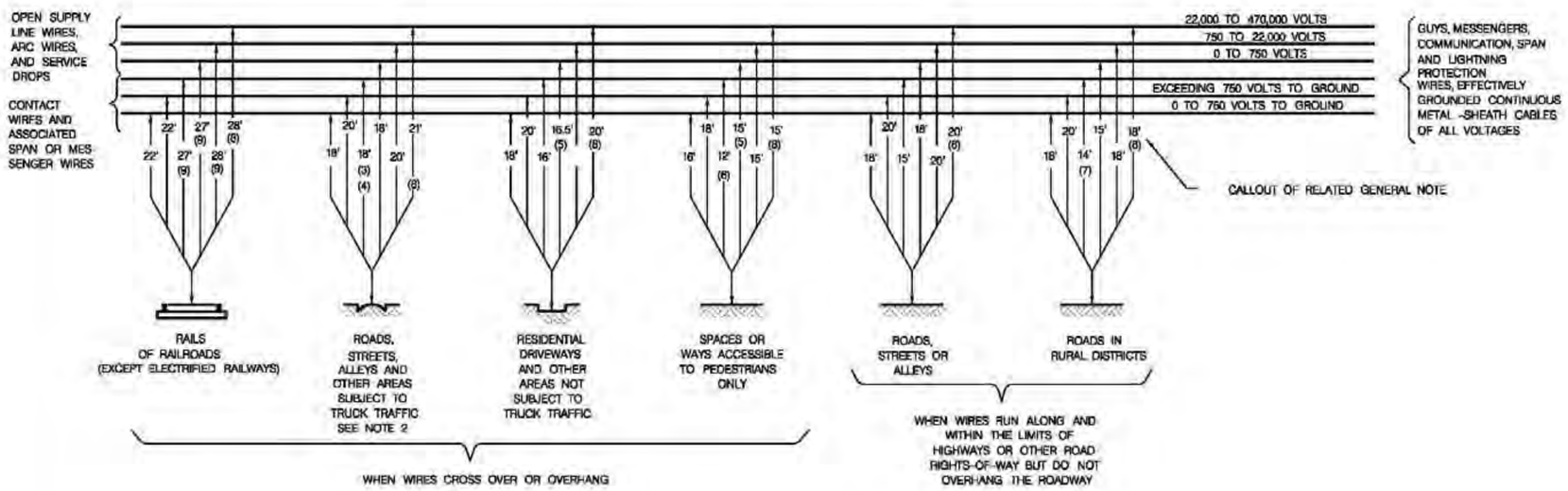

MINIMUM VERTICAL WIRE CLEARANCE ABOVE GROUND OR RAILS

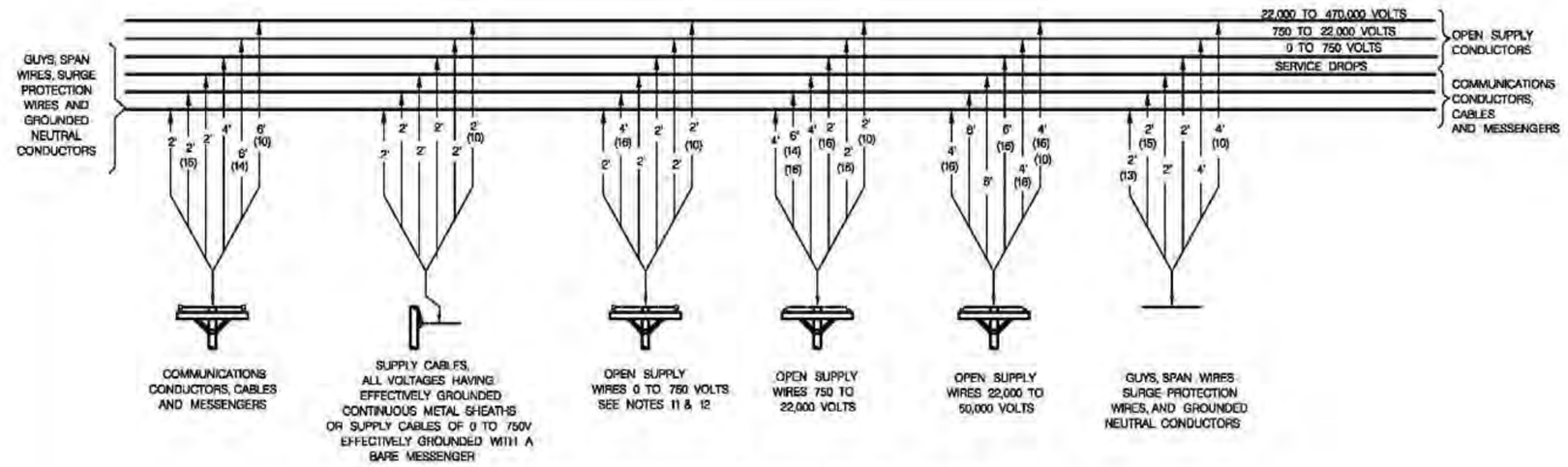

MINIMUM VERTICAL WIRE CLEARANCE ABOVE GROUND OR RAILS

NOTES:

1. ALL CLEARANCES SHALL COMPLY WITH THE CURRENT ISSUE OF THE NATIONAL ELECTRIC SAFETY CODE.
2. THESE CLEARANCES DO NOT ALLOW FOR THE FUTURE ROAD RESURFACING.
3. IF A COMMUNICATION SERVICE DROP OR A GUY WHICH IS EFFECTIVELY GROUNDED CROSSES RESIDENTIAL STREETS AND ROADS, THE CLEARANCE MAY BE REDUCED TO 16 FT. AT THE SIDE OF THE TRAVELED WAY PROVIDED THE CLEARANCE AT THE CENTER OF THE TRAVELED WAY IS AT LEAST 18 FT. THIS REDUCTION IN CLEARANCE DOES NOT APPLY TO ARTERIAL STREETS AND HIGHWAYS WHICH ARE PRIMARILY FOR THROUGH TRAFFIC, USUALLY ON A CONTINUOUS ROUTE.
4. FOR COMMUNICATIONS CABLES SUPPORTED ON A MESSENGER, AND WITH SPAN LENGTHS NOT EXCEEDING 150 FT., THE CLEARANCE MAY BE REDUCED TO 17'-0" ABOVE OR ALONG LOCAL STREETS OR ROADS. THIS REDUCTION DOES NOT APPLY FOR ARTERIAL STREETS OR HIGHWAYS WHICH ARE PRIMARILY FOR THROUGH TRAFFIC, USUALLY ON A CONTINUOUS ROUTE.
5. THIS CLEARANCE MAY BE REDUCED TO 12 FT., FOR SUPPLY CONDUCTORS LIMITED TO 300V TO GROUND.
6. THIS CLEARANCE MAY BE REDUCED TO 10.5 FT., FOR INSULATED SERVICE DROPS LIMITED TO 300V TO GROUND.
7. THIS CLEARANCE MAY BE REDUCED TO 13.5 FT., FOR COMMUNICATION CONDUCTORS.
8. FOR VOLTAGES EXCEEDING 22,000 VOLTS, THE CLEARANCE SHALL BE INCREASED BY 0.4 INCH FOR EACH 1,000 VOLTS, OR FRACTION THEREOF IN EXCESS OF 22,000 VOLTS. FOR VOLTAGES IN EXCESS OF 470,000 VOLTS, REFER TO NATIONAL ELECTRICAL SAFETY CODE.
9. THESE CLEARANCES MAY BE REDUCED TO 25 FT. WHERE PARALLELED BY TROLLEY-CONTACT CONDUCTOR ON THE SAME STREET OR HIGHWAY.
10. FOR VOLTAGES EXCEEDING 22,000V, THE CLEARANCE SHALL BE INCREASED BY 0.4 INCH FOR EACH 1,000 VOLTS OR FRACTION THEREOF, IN EXCESS OF 22,000 VOLTS. IF BOTH UPPER AND LOWER WIRES EXCEED 22,000 VOLTS CALCULATE INCREASES SEPARATELY FOR UPPER AND LOWER WIRES AND ADD BOTH TO CLEARANCE. FOR VOLTAGE ABOVE 470,000 VOLTS, SEE N.E.S.C.,
11. FOR CLEARANCE PURPOSES, INSULATED, NON-SHIELDED CABLES CARRYING 750 TO 2,900 VOLTS SUPPORTED ON AND CABLED TOGETHER WITH AN EFFECTIVELY GROUNDED BARE MESSENGER SHALL BE TREATED AS OPEN SUPPLY CONDUCTOR CARRYING 0 TO 750 VOLTS.
12. FOR CLEARANCE PURPOSES, CABLES OF ANY VOLTAGE OVER 750 VOLTS, COVERED WITH A CONTINUOUS AUXILIARY SEMICONDUCTING SHIELD IN COMBINATION WITH SUITABLE METALLIC DRAINAGE AND SUPPORTED ON AND CABLED TOGETHER WITH AN EFFECTIVELY GROUNDED BARE MESSENGER SHALL BE TREATED AS OPEN SUPPLY CONDUCTOR CARRYING 0 TO 750 VOLTS.
13. THIS CLEARANCE MAY BE REDUCED WHERE BOTH GUYS ARE ELECTRICALLY INTERCONNECTED.
14. THIS CLEARANCE MAY BE REDUCED TO 4 FT. WHERE SUPPLY CONDUCTORS OF 750V TO 8.7KV CROSS A COMMUNICATION LINE MORE THAN 8 FT. HORIZONTALLY FROM A COMMUNICATION STRUCTURE.
15. THE CLEARANCE OF COMMUNICATION CONDUCTORS AND THEIR GUY, SPAN, AND MESSENGER WIRES FROM EACH OTHER IN LOCATIONS WHERE NO OTHER CLASSES OF CONDUCTORS ARE INVOLVED MAY BE REDUCED BY MUTUAL CONSENT OF THE PARTIES CONCERNED, SUBJECT TO THE APPROVAL OF THE REGULATORY BODY HAVING JURISDICTION, EXCEPT FOR FIRE ALARM CONDUCTORS AND CONDUCTORS USED IN THE OPERATION OF RAILROADS, OR WHERE ONE SET OF CONDUCTORS IS FOR PUBLIC USE AND THE OTHER IN THE OPERATION OF SUPPLY SYSTEMS.
16. IN GENERAL, THIS TYPE OF CROSSING IS NOT RECOMMENDED.

D.C. DEPARTMENT OF TRANSPORTATION

DATE	APPR.	
REVISED		
ISSUED:		REFERENCE

RECOMMENDED: Mohammad Khalil
DEPUTY CHIEF ENGINEER

APPROVED:
CHIEF TRANSPORTATION ENGINEER

STREETCAR STANDARD DRAWINGS

OVERHEAD CONTACT SYSTEM
TECHNICAL SHEET
VERTICAL ELECTRICAL CLEARANCE
FOR NON-OCS WIRES

PROJECT ENG.
DESIGNED BY
CHECKED BY
DRAWN BY
PROJECT MGR. CY
DIVISION CHIEF
DATE
FILE
DWG. NO. OCT 03

c:\pwworking\plitt\d0537315\OCT-03.dgn
4/29/2015

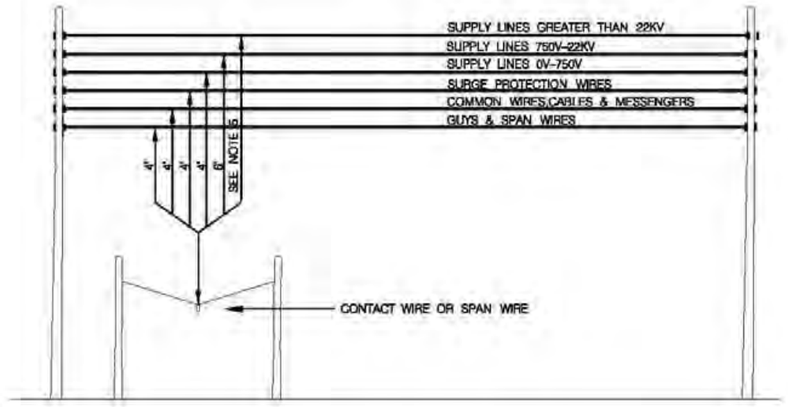

NON O.C.S. CONDUCTOR CLEARANCES ABOVE CONTACT
SEE NOTE 4

NOTES:

1. ALL CLEARANCES SHALL COMPLY WITH NATIONAL ELECTRIC SAFETY CODE.
2. ALL CLEARANCES ARE MINIMUM VALUES.
3. VERTICAL CLEARANCES APPLY TO CONTACT WIRES UNDER THE FOLLOWING CONDITIONS:
   A. CONDUCTOR TEMPERATURE OF 60 DEGREES F, NO ICE NO WIND, WITH FINAL SAG IN THE WIRE.
   B. SPAN LENGTHS NOT GREATER THAN THE FOLLOWING:
      SINGLE CONTACT WIRE – 120 FT.
4. VERTICAL CLEARANCES APPLY TO NON OCS CONDUCTORS ABOVE OCS CONTACT WIRES OR SPAN WIRE WITH NO ICE OR UNDER THE FOLLOWING CONDITIONS:
   A. CONDUCTOR SAG AT 120 DEGREES F
   B. OR MAXIMUM CONDUCTOR TEMPERATURE IS GREATER THAN 120 DEGREES F
   C. OR 32 DEGREES F WITH RADIAL ICE OF 0.25 INCHES WHICHEVER PRODUCES THE LARGEST SAG AND O.C.S. CONTACT WIRES, AND SPAN WIRE WITH NO ICE
5. FOR VOLTAGES EXCEEDING 22KV (UP TO 470KV) THE CLEARANCE SHALL BE INCREASED BY 0.4 INCHES FOR EACH 1KV, OR FRACTION THEREOF, IN EXCESS OF 22KV.

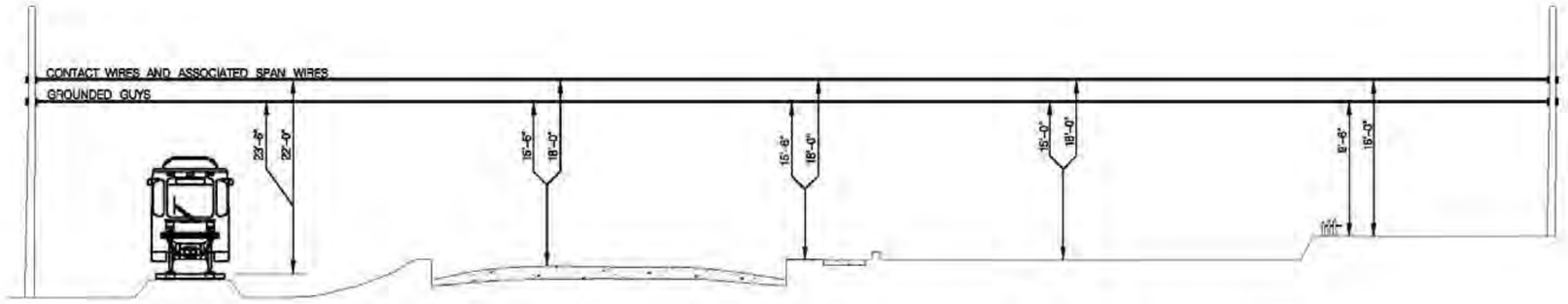

TRACK RAILS OF RAILROADS (EXCEPT ELECTRIFIED RAILROADS USING OVER-HEAD CONDUCTOR.)

ROADS, STREETS, AND OTHER AREAS SUBJECT TO ANY VEHICLE EXCEEDING 8 FT HEIGHT

OVER GROUND PARALLEL TO AND WITHIN R.O.W. OF PUBLIC STREETS BUT NOT OVERHANGING ROADWAY

DRIVEWAYS, PARKING LOTS AND ALLEYS SUBJECT TO ANY VEHICLE EXCEEDING 8 FT HEIGHT

ABOVE GROUND IN AREAS ACESSIBLE TO PEDESTRIANS OR RESTRICTED TO RIDERS ON HORSES, ANIMALS, AND VEHICLES LESS THAN 8 FT HEIGHT

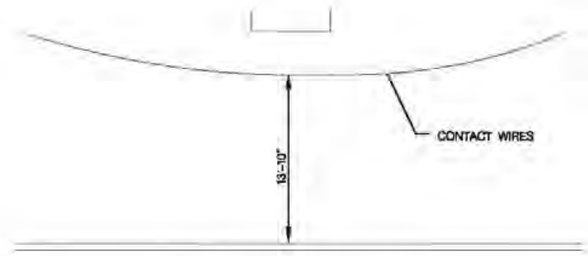

OVERHEAD BRIDGE OR TUNNEL OCS CONTACT WIRE CLEARANCES ABOVE RAIL

OCS WIRE CLEARANCES ABOVE GROUND OR RAILS
SEE NOTE 3

D.C. DEPARTMENT OF TRANSPORTATION

DATE	APPR.		RECOMMENDED: Mohammad Khalid DEPUTY CHIEF ENGINEER	STREETCAR STANDARD DRAWINGS
REVISED				
ISSUED:		REFERENCE	APPROVED: CHIEF TRANSPORTATION ENGINEER	OVERHEAD CONTACT SYSTEM TECHNICAL SHEET VERTICAL ELECTRICAL CLEARANCE REQUIREMENTS

PROJECT ENG.
DESIGNED BY
CHECKED BY
DRAWN BY
PROJECT MGR. CY
DIVISION CHIEF
DATE
FILE
DWG. NO. OCT-04

c:\pwworking\plit\d0537312\OCT-04.dgn
1/20/2012

DESIGN CRITERIA

1. CLIMATIC PARAMETERS

TEMPERATURE	OPEN ROUTE
NORMAL	60 DEGREES F
MINIMUM	-6 DEGREES F
MAXIMUM	125 DEGREES F

CONDITION	WIND	ICE COVER CAW
OPERATING	40 MPH	1/4" RADIAL
OPERATING	55 MPH	NONE
NON-OPERATING	40 MPH	1/2" RADIAL
NON-OPERATING	90 MPH	NONE

2. ELECTRICAL CLEARANCES

	DESIGN NORMAL
STATIC	4 INCHES
PASSING	3 INCHES

3. CATENARY SYSTEM PARAMETERS

ITEM	UNITS	IN-STREET SECTIONS	YARD SECTION
WIRE SIZE:			
CONTACT	KCMIL	350	350
TENSION AT DESIGN TEMP (60^ F)			
CONTACT WIRE	LB	3000	2000
NORMAL CONTACT WIRE HEIGHT - NON EXCLUSIVE ROW	FEET	19.0	19.0
EXCLUSIVE ROW	FEET	—	—
MAXIMUM INSTALLED WIRE HEIGHT	FEET	20.0	20.0
NORMAL SYSTEM HEIGHT	FEET	—	—
MAXIMUM DESIGNED SPAN - EMBEDDED TRACK, AT	FEET	120	120
- BALLASTED TRACK, AT	FEET	120	120
MAXIMUM STAGGER	INCHES	9	9
MAXIMUM HALF TENSION LENGTH	FEET	2640	2640
CONTACT WIRE MAXIMUM WEAR-MAXIMUM	% OF ORIGINAL AREA	30	30

4. TOLERANCES AND RELATED INFORMATION

A. TRACK

	EMBEDDED OR DIRECT FIXATION
VERTICAL	0.625 INCHES
HORIZONTAL	1.00 INCH
CROSS LEVEL	0.50 INCH
GAUGE	-0.25 TO +0.25 INCH

B. VEHICLE (ARTICULATED)

LATERAL DISPLACEMENT (EACH SIDE)	2.671 INCHES
ROLL TO EACH SIDE - (FAILED SUSPENSION)	3 INCHES
- (NORMAL OPERATION)	2 INCHES
HEIGHT OF ROLL CENTER	30.7 INCHES
BOUNCE (MAXIMUM)	1 INCH
TRUCK CENTERS	38.7 FEET
TRUCK WHEELBASE	74 INCHES
WIDTH (EXCLUDING MIRRORS)	8.14 FEET
LENGTH (OVER COUPLERS)	66 FEET

C. PANTOGRAPH

OFFSET FROM TRUCK CENTER PIN	0 INCHES
OVERALL WIDTH	66.1 INCHES
CARBON WIDTH	41.3 INCHES
MAXIMUM CARBON WEAR	0.50 INCHES
MAXIMUM PANTOGRAPH LOCKDOWN HEIGHT	13.00 FEET
MAXIMUM DEFLECTION RELATIVE TO CAR (SWAY)	1.50 INCHES TO EACH SIDE

5. FOUNDATION INSTALLATION AND POLE TOLERANCES

		UNITS
FOUNDATION LOCATION ALONG TRACK		
- OPEN TRACK	+/-5.0	FEET
- TRACK CURVE LESS THAN 500 FT RADIUS	+/-2.0	FEET
- ADJACENT TO SPECIAL TRACKWORK	+/-2.0	FEET
- SPAN CHANGE BETWEEN TWO ADJACENT	+/-5.0	FEET
FOUNDATION OFFSET	+/-2.0	INCHES
STRUCTURE (FOUNDATION) LOCATION ACROSS TRACK	+/-1.0	INCHES
FOUNDATION ELEVATION	+/-0.25	INCHES
FOUNDATION DEFLECTION (MAX.)	0.50	DEGREES
POLE BASEPLATE ELEVATION	+/-1.00	INCHES
MAXIMUM POLE DEFLECTION AT CONTACT WIRE HEIGHT DUE TO LIVE LOAD (NOTE 4)	1.A.1.0	INCH

6. WIRING INSTALLATION TOLERANCES

		UNITS
CONDUCTOR HEIGHT AT SUPPORTS (SEE NOTE 1)		
- OPEN ROUTE	+/-1.00	INCHES
- BRIDGES OVER RAIL WITHIN 100 FEET OF A BRIDGE	+/-0.50	INCH
STAGGER AT SUPPORTS	+/-1.00	INCH
WIRE TENSION	+/-50	POUNDS
MINIMUM PANTOGRAPH SECURITY	3.00	INCHES
MAXIMUM CONTACT WIRE GRADIENT RELATIVE TO TRACK		
- FULL SPANS	1:5 x MAX TRACK SPEED IN M.P.H.	
- TRANSITION SPANS	1:10 x MAX TRACK SPEED IN M.P.H.	
- BRIDGES & TUNNELS		

7. MINIMUM ASBUILT CONTACT WIRE HEIGHT

	FT.	IN.
TRACK VERTICAL TOLERANCE	0	0.5
MAXIMUM VEHICLE PANTOGRAPH LOCKDOWN HEIGHT	13	0
MINIMUM PASSING CLEARANCE	0	3
VEHICLE VERTICAL BOUNCE	0	1
REQUIRED MINIMUM ASBUILT CONTACT WIRE HEIGHT UNDER ANY OPERATING CONDITION	13	4.5

NOTES:

1. THE TOLERANCES GIVEN AT THE SUPPORTS FOR THE CONDUCTOR HEIGHTS ARE TO BE REDUCED WHERE APPLICABLE TO PROVIDE ACCEPTABLE CONDUCTOR GRADIENT AND CLEARANCES.
2. FOR PANTOGRAPH CLEARANCE ENVELOPE SEE DESIGN CRITERIA AND DWGS OCT-08 TO OCT-11.
3. CONTACT WIRE HAS NO DESIGNED PRESAG.
4. NORMAL OPERATING ACROSS TRACK POLE DEFLECTION DUE TO LIVE LOADS SHALL NOT EXCEED 1" IN EITHER DIRECTION LATERALLY.
5. MAXIMUM OPERATING CONDITION IS EITHER: 1. THE PRESENCE OF A 55 MPH WIND AND NO ICE COVERING, OR 2. THE PRESENCE OF A 40 MPH WIND AND 1/4" RADIAL ICE COVER ON THE CONTACT WIRE. OPERATING CONDITION IS TO BE APPLIED IN CALCULATIONS AND DIMENSIONS RELATING TO NORMAL TRAIN OPERATIONS.
6. MAXIMUM NON-OPERATING CONDITION IS EITHER: 1. THE PRESENCE OF A 90 MPH WIND AND NO ICE COVER, OR 2. THE PRESENCE OF A 40 MPH WIND AND 1/2" RADIAL ICE COVER ON THE CONTACT WIRE.

   NON-OPERATING CONDITION IS TO BE APPLIED IN CALCULATIONS RELATING TO STRENGTH OF OCS AND SUPPORTING EQUIPMENT.

			RECOMMENDED: _____ DEPUTY CHIEF ENGINEER	D.C. DEPARTMENT OF TRANSPORTATION
DATE	APPR.			
REVISED				STREETCAR STANDARD DRAWINGS
ISSUED:		REFERENCE	APPROVED: _____ CHIEF TRANSPORTATION ENGINEER	OVERHEAD CONTACT SYSTEM TECHNICAL SHEET SUMMARY OF DESIGN CRITERIA, TOLERANCES AND WIRE HEIGHT

PROJECT ENG. / DESIGNED BY / CHECKED BY / DRAWN BY / PROJECT MGR. CV

DIVISION CHIEF / DATE / FILE / DWG. NO. OCT 05

c:\pwworking\pit1\d0537312\OCT-05.dgn
4/29/2012

NOTES:

1. THIS DRAWING IS A RECORD OF PANTOGRAPH COLLECTOR HEAD DIMENSIONS THAT HAVE BEEN CONSIDERED IN SETTING PRINCIPAL OCS DIMENSIONS IN THESE STANDARD DRAWINGS AND THE VEHICLE DYNAMIC ENVELOPE.

2. DIMENSIONS SHOWN ARE AS FOLLOWS:

LH	COLLECTOR LENGTH OVER HORNS
LC	LENGTH OF CARBON COLLECTORS
WC	WIDTH OF COLLECTOR STRIP
HH	OVERALL HEIGHT TO BOTTOM OF HORN
RC	RADIUS OF CONTACT STRIP

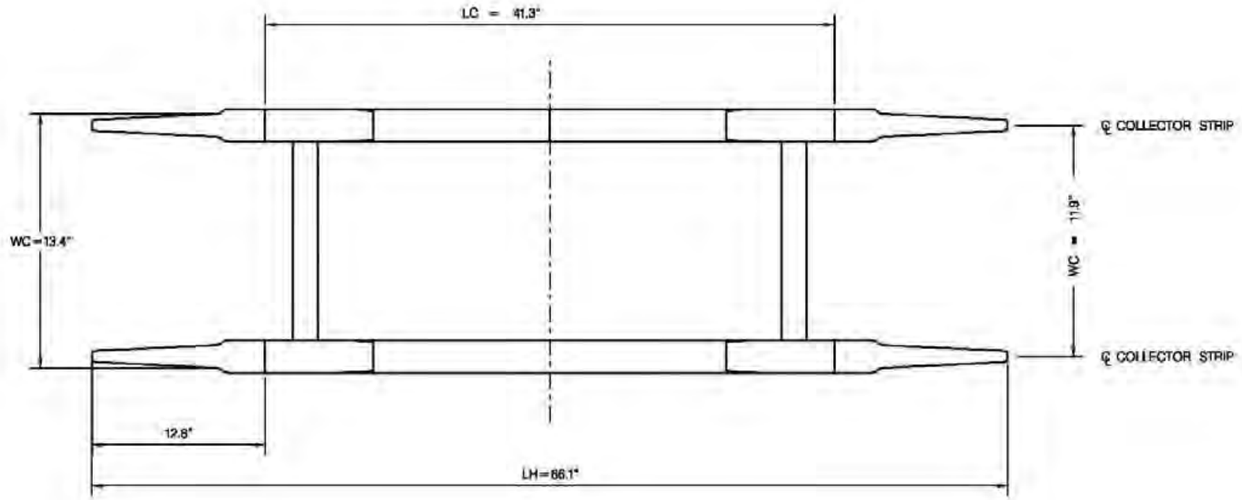

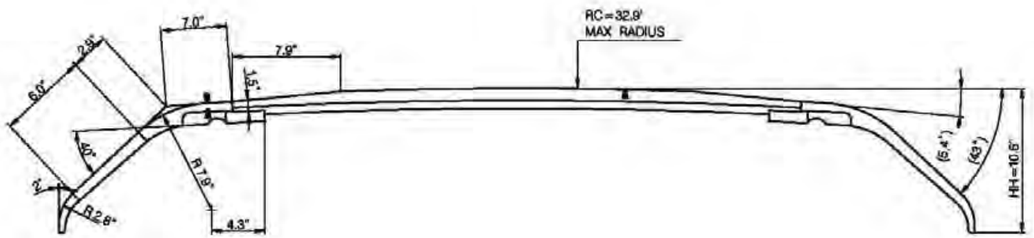

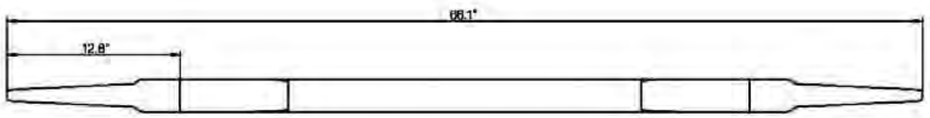

LEKOV COLLECTOR HEAD

			RECOMMENDED: DEPUTY CHIEF ENGINEER	D.C. DEPARTMENT OF TRANSPORTATION
DATE	APPR.			
REVISED			APPROVED: CHIEF TRANSPORTATION ENGINEER	STREETCAR STANDARD DRAWINGS
ISSUED:		REFERENCE		OVERHEAD CONTACT SYSTEM TECHNICAL SHEET PANTOGRAPH COLLECTOR OUTLINE

PROJECT ENG.
DESIGNED BY
CHECKED BY
DRAWN BY
PROJECT MGR. CV
DIVISION CHIEF
DATE
FILE
DWG. NO. OCT-06

c:\pwworking\phil\d0537315\OCT-06.dgn
1/20/2021

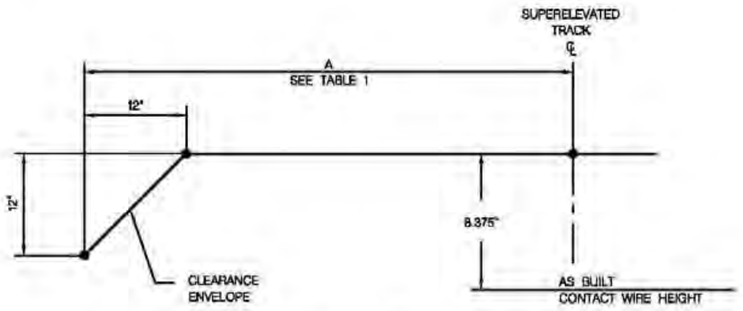

DETAIL 2 / SCALE: NTS

TABLE 1: DIMENSIONS TABLE		
CONTACT WIRE HEIGHT	EMBEDDED TRACK	
	INSIDE CURVE	TANGENT OR OUTSIDE CURVE
	DIMENSION A (INCHES)	
20'-0"	60.2"	60.2"
19'-0"	59.2"	59.2"
13'-0"	54.0"	54.0"

NOTES:

1. THIS DRAWING PROVIDES A SIMPLIFIED PANTOGRAPH CLEARANCE ENVELOPE FOR USE WITH AS BUILT OCS EQUIPMENT, TRACK AND POLES, MASONRY WALLS AND STRUCTURES. THE DIMENSIONS ARE TO BE MEASURED RELATIVE TO THE SUPERELEVATED TRACK.
2. OBSTRUCTIONS NOT CLEARING THIS OUTLINE MAY BE FURTHER EXAMINED AGAINST THE CONDITIONS AND MINIMUM CLEARANCES OF DWGS OCT-09, OCT-10, AND OCT-11. SEE DETAIL 3.
3. FOR VALUES OF CONTACT WIRE HEIGHT BETWEEN THOSE LISTED IN TABLE 1, USE LINEAR INTERPOLATION TO DETERMINE A VALUE FOR DIMENSION A.
4. MINIMUM CLEARANCES FOR USE PRIOR TO CONSTRUCTION ARE TO BE CALCULATED USING ALLOWANCES SHOWN ON DRAWINGS OCT-09, OCT-10 AND OCT-11.
5. MINIMUM CLEARANCES BETWEEN LIVE WIRES OR FITTINGS AND OTHER FIXED INFRASTRUCTURE SHALL BE DETERMINED FROM NATIONAL ELECTRIC SAFETY CODE (N.E.S.C) AND DRAWINGS OCT-03 AND OCT-04.

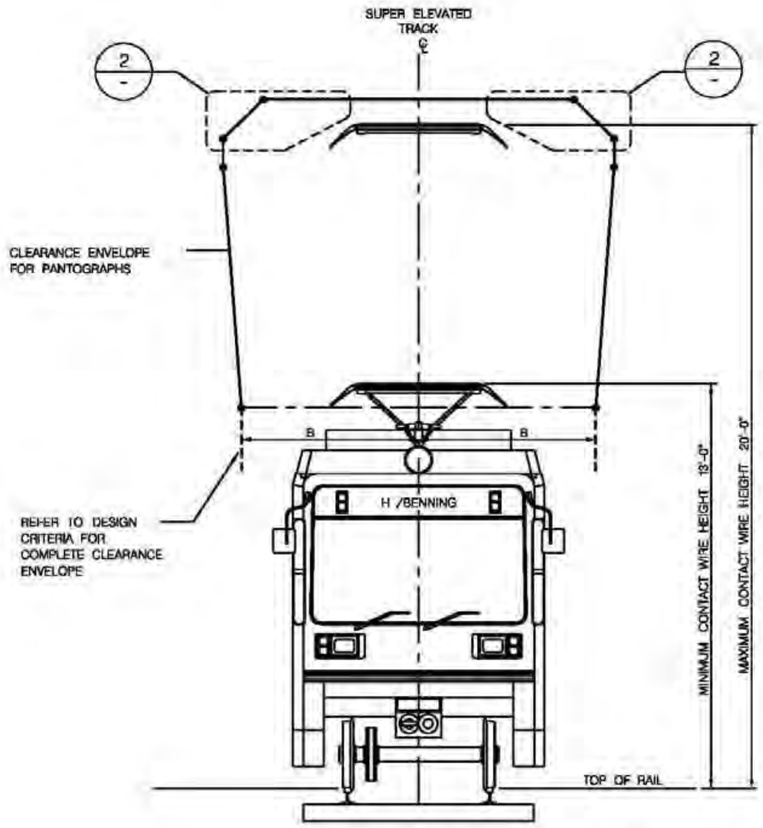

SIMPLIFIED PANTOGRAPH CLEARANCE ENVELOPE FOR AS-BUILT CONDITIONS 1 / SEE NOTE 1

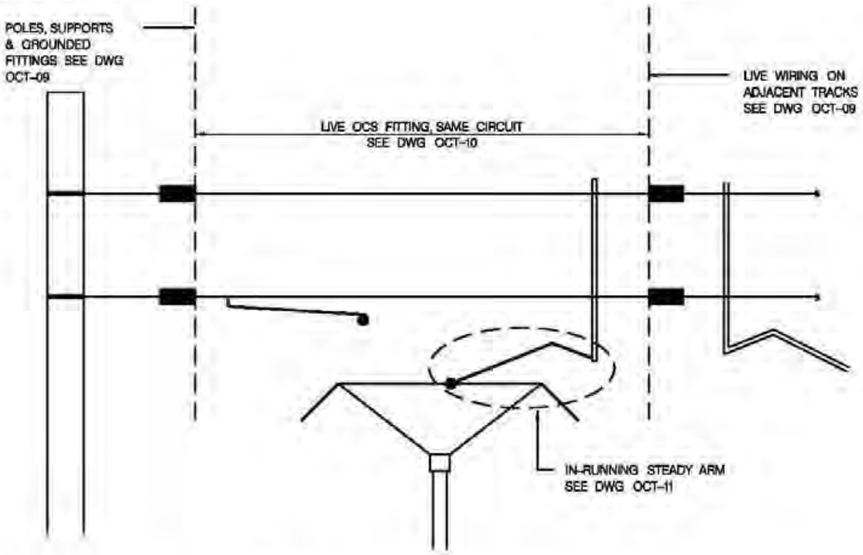

RELATED MINIMUM CLEARANCE DETAILS 3 / SCALE: NTS

			RECOMMENDED: Mohammad Khalil / DEPUTY CHIEF ENGINEER	D.C. DEPARTMENT OF TRANSPORTATION
DATE	APPR.		APPROVED: / CHIEF TRANSPORTATION ENGINEER	STREETCAR STANDARD DRAWINGS
REVISED				OVERHEAD CONTACT SYSTEM TECHNICAL SHEET SIMPLIFIED PANTOGRAPH CLEARANCE
ISSUED:		REFERENCE		DWG. NO. OCT-07

c:\pwworking\pitt\d0537315\OCT-07.dgn
12/9/2012

TABLE 1: HORIZONTAL OFFSET DUE TO TRACK SUPERELEVATION (OS)						
AS-BUILT CW HEIGHT ABOVE RAIL	SUPERELEVATION (INCHES)					
	1	2	3	4	5	6
20'-0"	4.3	8.6	13.0	17.3	21.6	25.9
19'-0"	4.1	8.2	12.3	16.4	20.5	24.6
13'-0"	2.8	5.6	8.4	11.2	14.1	16.9

TABLE 2: VEHICLE DIMENSIONS		
EMBEDDED TRACK (SEE NOTE 5)		
AS-BUILT CW HT.	DIMENSION A INCHES	
	INSIDE CURVE	OUTSIDE CURVE
20'-0"	55.7	55.7
19'-0"	54.7	54.7
13'-0"	49.5	49.5

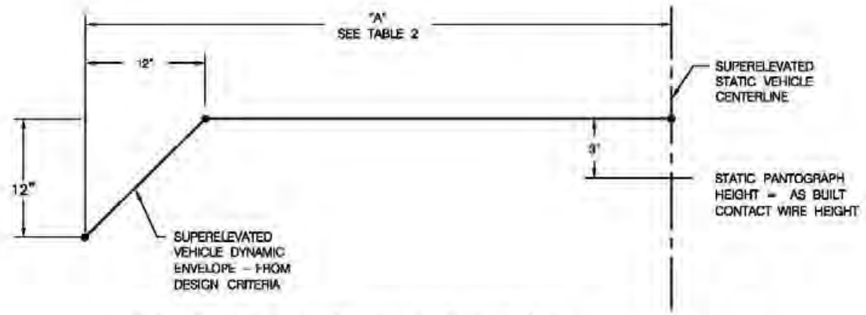

EXTRACT FROM VEHICLE DYNAMIC ENVELOPE
SEE NOTE 5

NOTES:

1. THIS DRAWING PROVIDES DETAILED RELATIONSHIPS AND DIMENSIONS FOR DETERMINATION OF MINIMUM CLEARANCES BETWEEN A PANTOGRAPH AND ADJACENT FIXED INFRASTRUCTURE. THESE CLEARANCES MAY BE FURTHER REDUCED ONLY FOR THOSE CASES LISTED IN NOTE 2.
2. FOR THE PURPOSE OF DETERMINATION OF CLEARANCES TO A PANTOGRAPH, AN OCS FITTING SHALL BE CONSIDERED LIVE WHERE IT IS SEPARATED FROM GROUNDED POLES OR LIVE WIRING OF ADJACENT TRACKS, BY AT LEAST ONE LEVEL OF SYSTEM RATED INSULATION.
   - FOR IN-RUNNING LIVE STEADY ARMS, SEE DRAWING pTD-0051
   - FOR OTHER LIVE OCS EQUIPMENT, SEE DRAWING pTD-0050
   - ALL OTHER STRUCTURES, POLES OR EQUIPMENT REQUIRE PANTOGRAPH CLEARANCES DETERMINED FROM THIS DRAWING
3. FOR OBJECTS DIAGONALLY SEPARATED, BOTH HORIZONTAL AND VERTICAL CLEARANCES ARE TO BE APPLIED. RUNNING CLEARANCES COMPONENTS MAY BE MEASURE RADIALLY.
4. MINIMUM CLEARANCES BETWEEN LIVE WIRES OR FITTINGS AND OTHER FIXED INFRASTRUCTURE SHALL BE DETERMINED FROM NATIONAL ELECTRIC SAFETY CODE (N.E.S.C.) AND DRAWINGS OCT-03 AND OCT-04.
5. VEHICLE DYNAMIC ENVELOPE DETERMINED FOR SUPERELEVATION = 0" FROM CLEARANCE REQUIREMENTS OF THE DISTRICT DESIGN CRITERIA.
6. SUPERELEVATION OFFSET (OS) IS TO BE CONSIDERED WHEN MEASUREMENTS ARE TAKEN FROM VERTICAL TRACK CENTERLINE.
7. COLLECTOR HEAD TILT TO BE CONSIDERED ONLY WHERE ALL IN-RUNNING CONTACT WIRES ARE STAGGERED TO THE FAR SIDE OF THE SUPERELEVATED VEHICLE CENTERLINE.

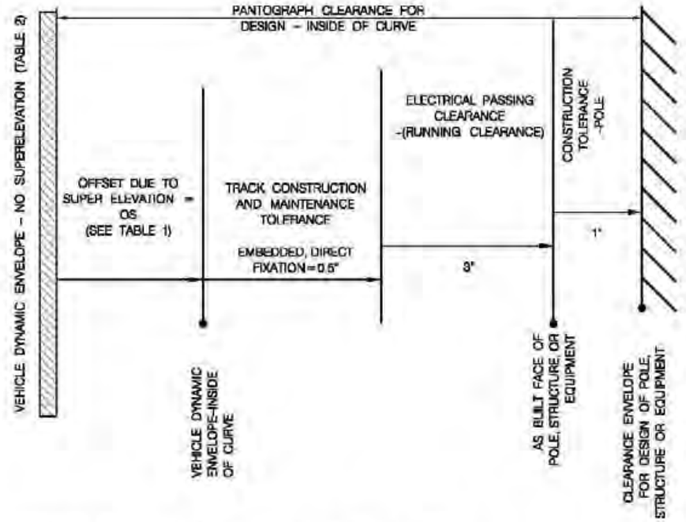

MINIMUM HORIZONTAL CLEARANCE TO OBJECTS
ON THE INSIDE OF CURVE FROM A PANTOGRAPH

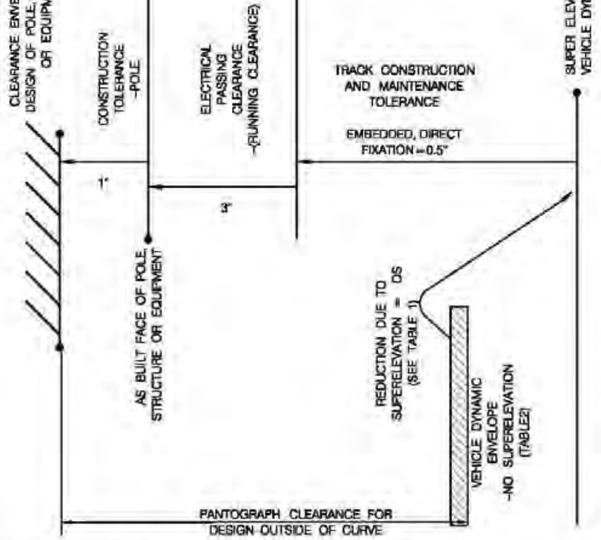

MINIMUM HORIZONTAL CLEARANCE TO OBJECTS
ON THE OUTSIDE OF CURVE FROM A PANTOGRAPH

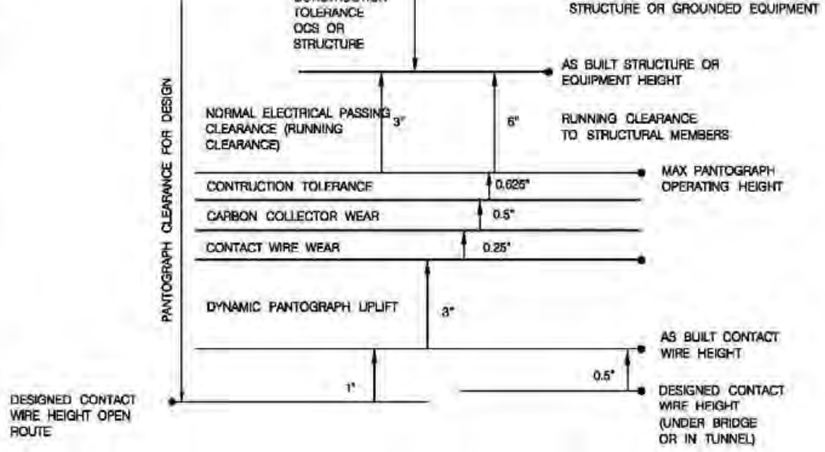

MINIMUM VERTICAL CLEARANCE TO OBJECTS
ABOVE THE TRACK FROM A PANTOGRAPH

			RECOMMENDED: Mohammad Khalid — DEPUTY CHIEF ENGINEER	D.C. DEPARTMENT OF TRANSPORTATION
				STREETCAR STANDARD DRAWINGS
DATE	APPR.		APPROVED: — CHIEF TRANSPORTATION ENGINEER	OVERHEAD CONTACT SYSTEM TECHNICAL SHEET PANTOGRAPH CLEARANCE TO GROUNDED ITEMS AND DIFFERENT ELECTRICAL CIRCUITS
REVISED				
ISSUED:		REFERENCE		

PROJECT ENG.
DESIGNED BY
CHECKED BY
DRAWN BY
PROJECT MGR. CV
DIVISION CHIEF
DATE
FILE
DWG. NO. OCT-06

c:\pwworking\pitt\d0537312\OCT-06.dgn
12/27/2012

TABLE 1: HORIZONTAL OFFSET DUE TO TRACK SUPERELEVATION (OS)						
CW HEIGHT ABOVE RAIL	SUPERELEVATION (INCHES)					
	1	2	3	4	5	6
20'-0"	4.3	8.6	13.0	17.3	21.6	25.9
19'-0"	4.1	8.2	12.3	16.4	20.5	24.6
13'-0"	2.8	5.6	8.4	11.2	14.1	16.9

TABLE 2: VEHICLE DIMENSIONS EMBEDDED TRACK (SEE NOTE 5)		
AS-BUILT CW HT	DIMENSION A INCHES	
	INSIDE CURVE	OUTSIDE CURVE
20'-0"	55.7"	55.7"
19'-0"	54.7"	54.7"
13'-0"	48.5"	49.5"

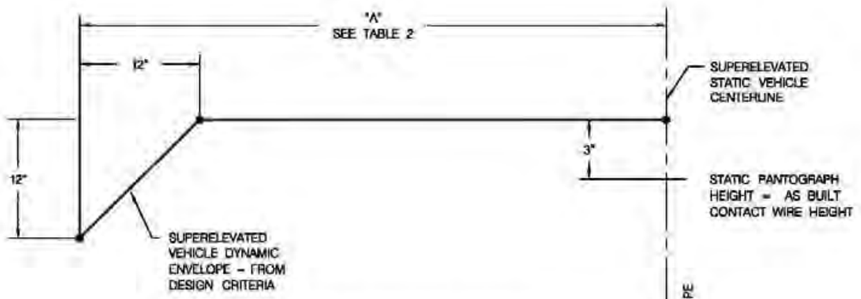

EXTRACT FROM VEHICLE DYNAMIC ENVELOPE
SEE NOTE 5

NOTES:

1. THE DRAWING PROVIDES RELATIONSHIPS AND DIMENSIONS FOR DETERMINATION OF MINIMUM CLEARANCES BETWEEN A PANTOGRAPH AND ADJACENT LIVE OCS, FITTINGS, EXCEPTING FOR IN-RUNNING STEADY ARMS.
2. FOR THE PURPOSE OF DETERMINATION OF CLEARANCES TO A PANTOGRAPH, AN OCS FITTING SHALL BE CONSIDERED LIVE ONLY WHERE IT IS SEPARATED FROM GROUNDED POLES OR LIVE WIRING OF ADJACENT TRACKS, BY AT LEAST ONE LEVEL OF SYSTEM RATED INSULATION.
   - FOR IN-RUNNING STEADY ARM, SEE DRAWING OCT-11
   - CLEARANCES FOR OTHER LIVE OCS FITTINGS TO BE DETERMINED FROM THIS DRAWING
   - ALL OTHER STRUCTURES, POLES OR EQUIPMENT REQUIRE CLEARANCES DETERMINED FROM DRAWING OCT-09
3. FOR OBJECTS DIAGONALLY SEPARATED, BOTH HORIZONTAL AND VERTICAL CLEARANCES ARE TO BE APPLIED. RUNNING CLEARANCE COMPONENTS MAY BE MEASURE RADIALLY.
4. MINIMUM CLEARANCES BETWEEN LIVE WIRES OR FITTINGS AND OTHER FIXED INFRASTRUCTURE SHALL BE DETERMINED FROM NATIONAL ELECTRIC SAFETY CODE (N.E.S.C.) AND DRAWINGS OCT-03 AND OCT-04.
5. VEHICLE DYNAMIC ENVELOPE DETERMINED FROM CLEARANCE REQUIREMENTS OF THE DISTRICT DESIGN CRITERIA.
6. SUPERELEVATION OFFSET (OS) IS TO BE CONSIDERED WHEN MEASUREMENTS ARE TAKEN FROM VERTICAL TRACK CENTERLINE.
7. COLLECTOR HEAD TILT TO BE CONSIDERED ONLY WHERE ALL IN-RUNNING CONTACT WIRES ARE STAGGERED TO THE FAR SIDE OF THE SUPERELEVATED VEHICLE CENTERLINE.

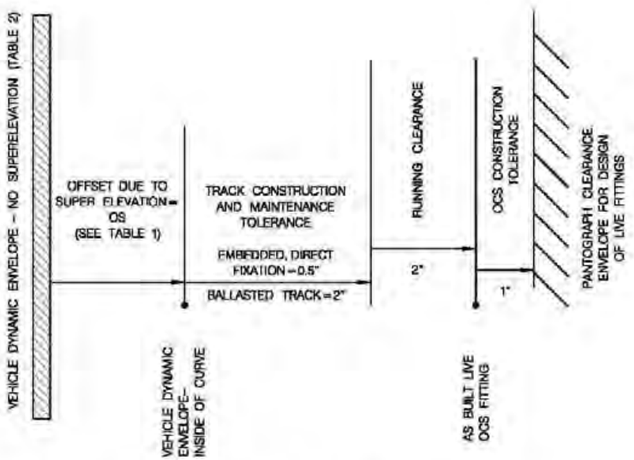

MINIMUM HORIZONTAL CLEARANCE TO LIVE FITTINGS ON THE OUTSIDE OF CURVE FROM A PANTOGRAPH

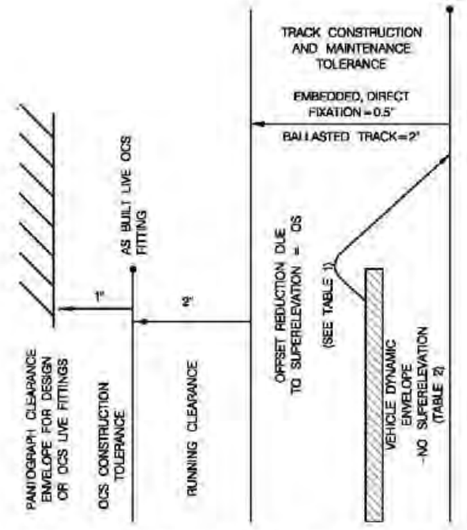

MINIMUM HORIZONTAL CLEARANCE TO LIVE FITTINGS ON THE OUTSIDE OF CURVE FROM A PANTOGRAPH

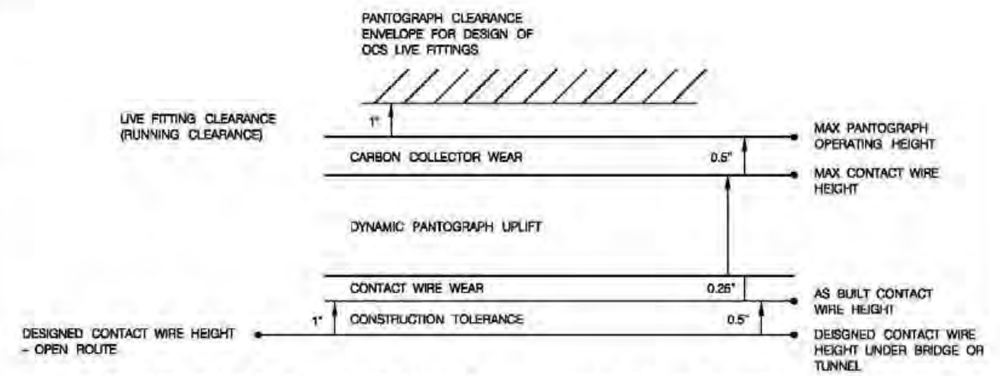

MINIMUM VERTICAL CLEARANCE FROM A PANTOGRAPH TO LIVE FITTINGS

DATE	APPR.	
REVISED		
ISSUED:		REFERENCE

RECOMMENDED: Mohammad Khalil
DEPUTY CHIEF ENGINEER

APPROVED:
CHIEF TRANSPORTATION ENGINEER

D.C. DEPARTMENT OF TRANSPORTATION

STREETCAR STANDARD DRAWINGS

OVERHEAD CONTACT SYSTEM
TECHNICAL SHEET
PANTOGRAPH CLEARANCE TO LIVE OCS FITTINGS

PROJECT ENG.
DESIGNED BY
CHECKED BY
DRAWN BY CY
PROJECT MGR.
DIVISION CHIEF
DATE
FILE
DWG. NO OCT-02

c:\pwworking\pitt\d0837313\OCT-09.dgn
4/29/2012

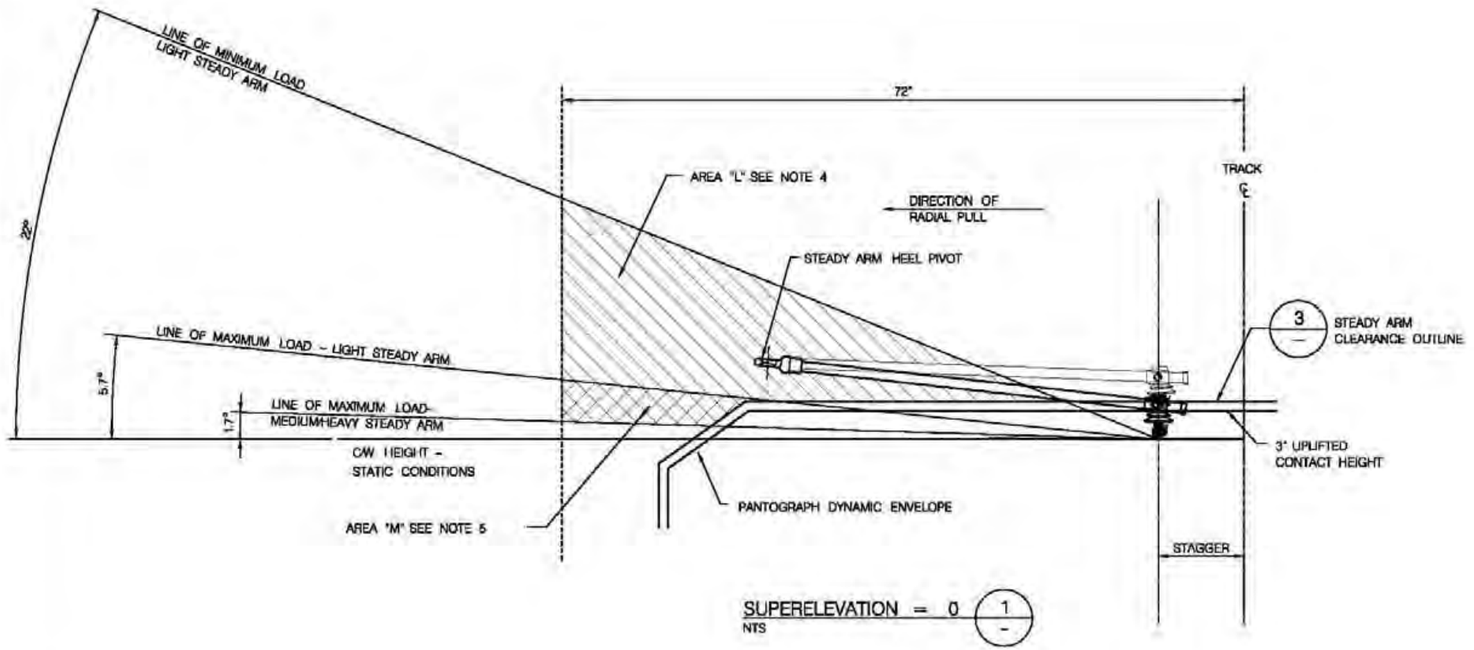

SUPERELEVATION = 0 (1/–)
NTS

NOTES:

1. THIS DRAWING IS TO BE USED FOR THE DESIGN AND APPLICATION OF STEADY ARMS REGISTERING IN-RUNNING CONTACT WIRES. IT DOES NOT APPLY TO UPLIFT RESTRICTING STEADY ARMS SPECIFIED FOR USE IN TUNNELS.
2. ALL STEADY ARMS SHALL BE SHAPED SO AS NOT TO ENCROACH INSIDE THE STEADY ARM CLEARANCE OUTLINE OR WITHIN 1" RUNNING CLEARANCE OF THE PANTOGRAPH DYNAMIC ENVELOPE EXCEPTING FOR CONTACT WIRE CLAMP COMPONENTS.
3. THE DIRECTION OF LOAD PULL IS TO BE MEASURED FROM THE STATIC CONTACT WIRE HEIGHT, WITH THE ANGLE RELATIVE TO LEVEL.
4. LIGHT LOAD STEADY ARMS ARE TO BE SUITABLE FOR RADIAL LOADS UP TO 200 POUNDS. THE STEADY ARM HEEL PIVOT POINT IS TO FALL WITHIN AREA "L" SHOWN.
5. MEDIUM LOAD STEADY ARMS ARE TO BE SUITABLE FOR RADIAL LOADS UP TO 500 POUNDS. THE STEADY ARM HEEL PIVOT POINT IS TO FALL WITHIN AREA "M" SHOWN.
6. HEAVY RADIAL LOADS OF UP TO 1000 POUNDS SHALL BE SERVICED BY USING TWO MEDIUM LOAD STEADY ARMS ARRANGED TO SHARE LOAD EQUALLY.
7. FOR AUTO-TENSIONED CONTACT WIRE THE MINIMUM DISTANCE FROM CONTACT WIRE TO HEEL PIVOT SHALL BE 36".

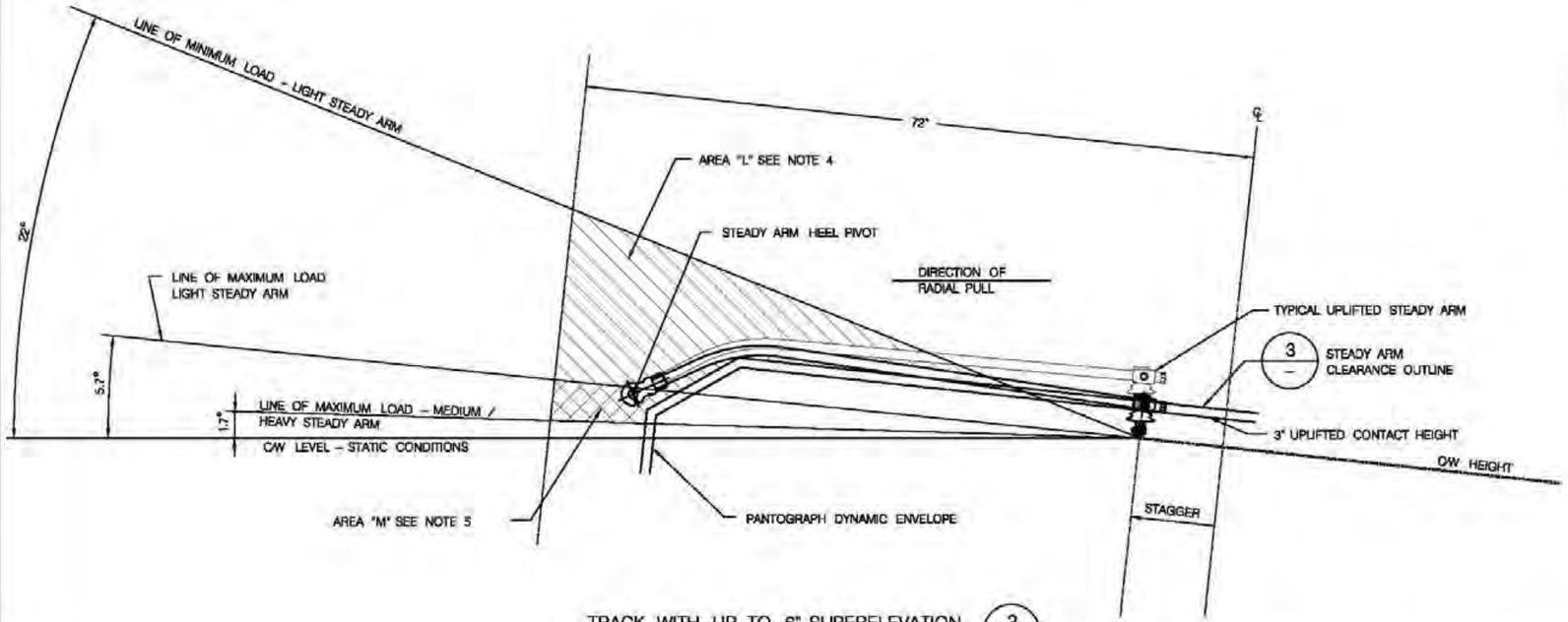

TRACK WITH UP TO 6" SUPERELEVATION (2/–)
NTS

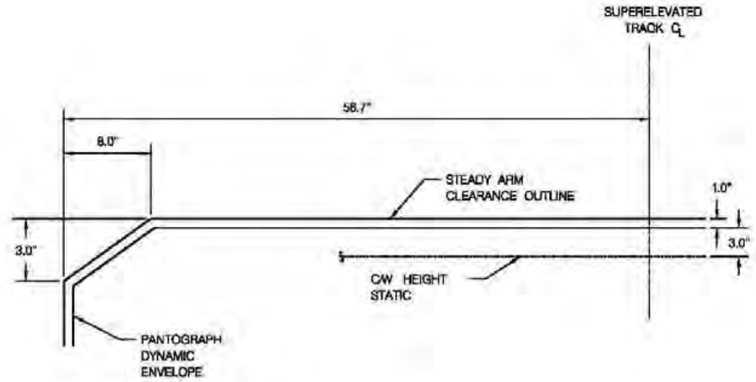

STEADY ARM CLEARANCE FROM UPLIFTED PANTOGRAPH (3/–)
NTS

DATE	APPR.	
REVISED		
ISSUED:		REFERENCE

RECOMMENDED: _____ DEPUTY CHIEF ENGINEER

APPROVED: _____ CHIEF TRANSPORTATION ENGINEER

D.C. DEPARTMENT OF TRANSPORTATION

STREETCAR STANDARD DRAWINGS

OVERHEAD CONTACT SYSTEM
TECHNICAL SHEETS
STEADY ARM CLEARANCES AND DIMENSIONS

PROJECT ENG.
DESIGNED BY
CHECKED BY
DRAWN BY
PROJECT MGR. CV
DIVISION CHIEF
DATE
FILE
DWG. NO. OCT-10

c:\pwworking\pit1\d0637312\OCT-10.dgn
1/20/2012

SINGLE WIRE AUTO–TENSIONED (SWAT)		
CONDUCTOR PARTICULARS (UNWORN CONDITION)	UNITS	CONDUCTOR CONTACT
CONDUCTOR TYPE	–	350 KCMIL SOLID GROOVED
MATERIAL	–	HARD DRAWN COPPER
DIAMETER	IN.	0.620
CROSS SECTIONAL AREA	Sq. In.	0.2758
WEIGHT OF CONDUCTOR	LB/FT	1.063
WEIGHT OF SYSTEM	LB/FT	1.063
RADIAL THICKNESS OF ICE (O)	IN.	0.25
WEIGHT OF ICE (O)	LB/FT	0.270
WEIGHT OF SYSTEM WITH ICE (O)	LB/FT	1.333
RADIAL THICKNESS OF ICE (NO)	IN.	0.50
WEIGHT OF ICE (NO)	LB/FT	0.696
WEIGHT OF SYSTEM WITH ICE (NO)	LB/FT	1.759
CONDUCTOR BREAKING LOAD	LB	11810
MAXIMUM SPAN	FT	120
CONDUCTOR TENSIONS AT:		
60 DEG F NO WIND	LB	3000
125 DEG F NO WIND	LB	3000
-5 DEG F WIND & ICE (O)	LB	4028
-5 DEG F W/55 MPH WIND (NO)	LB	3985
CONDUCTOR SAG ON MAXIMUM SPAN AT:		
60 DEG F NO WIND	FT	.638
125 DEG F NO WIND	FT	.638
-5 DEG F 40 MPH WIND ICE (O)	FT	.596
-5 DEG F 55 MPH WIND	FT	.513
CONDUCTOR HEIGHT AT 60 DEG F	FT	19.0 (NORMAL)
LOWER LIMIT OF AUTO TENSIONING	DEG F	20
UPPER LIMIT OF AUTO TENSIONING	DEG F	125
MODULUS OF ELASTICITY	PSI	$18x10^{6}$
COEFFICIENT OF THERMAL EXPANSION	/DEG F	$9.4x10^{-6}$
MINIMUM FACTOR OF SAFETY	–	2.93

SINGLE WIRE FIXED–TENSIONED (SWFT)		
CONDUCTOR PARTICULARS (UNWORN CONDITION)	UNITS	CONDUCTOR CONTACT
CONDUCTOR TYPE	–	350 KCMIL SOLID GROOVED
MATERIAL	–	HARD DRAWN COPPER
DIAMETER	IN.	0.620
CROSS SECTIONAL AREA	Sq. In.	0.2758
WEIGHT OF CONDUCTOR	LB/FT	1.063
WEIGHT OF SYSTEM	LB/FT	1.063
RADIAL THICKNESS OF ICE (O)	IN.	0.25
WEIGHT OF ICE (O)	LB/FT	0.270
WEIGHT OF SYSTEM WITH ICE (O)	LB/FT	1.333
RADIAL THICKNESS OF ICE (NO)	IN.	0.50
WEIGHT OF ICE (NO)	LB/FT	0.696
WEIGHT OF SYSTEM WITH ICE (NO)	LB/FT	1.759
CONDUCTOR BREAKING LOAD	LB	11810
MAXIMUM SPAN	FT	100
CONDUCTOR TENSIONS AT:		
60 DEG F NO WIND	LB	2000
125 DEG F NO WIND	LB	844
-5 DEG F WIND & ICE (O)	LB	4477
-5 DEG F W/55 MPH WIND (NO)	LB	4441
CONDUCTOR SAG ON MAXIMUM SPAN AT:		
60 DEG F NO WIND	FT	.864
125 DEG F NO WIND	FT	1.575
-5 DEG F 40 MPH WIND ICE (O)	FT	.372
-5 DEG F 55 MPH WIND	FT	.320
CONDUCTOR HEIGHT AT 60 DEG F	FT	19.0 (NORMAL)
MODULUS OF ELASTICITY	PSI	$18x10^{6}$
COEFFICIENT OF THERMAL EXPANSION	/DEG F	$9.4x10^{-6}$
MINIMUM FACTOR OF SAFETY		2.84

NOTES:

1. ICE (O) OPERATING CONDITION IS WITH 1/4" RADIAL ICE ON THE CONTACT WIRE.
2. ICE (NO) NON OPERATING CONDITION IS WITH 1/2" RADIAL ICE ON THE CONTACT WIRE.
3. SYSTEM WEIGHTS SHOWN ARE FOR DESIGN PURPOSES AND CONSIST OF CONDUCTOR WEIGHTS PER FOOT, WHICH WERE TAKEN FROM MANUFACTURERS INFORMATION TABLES.

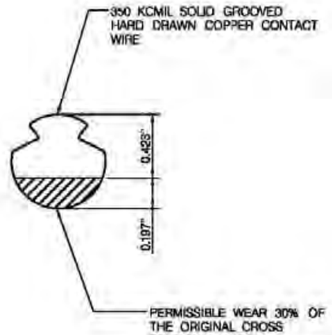

SINGLE WIRE AUTO–TENSIONED (SWAT)		
CONDUCTOR PARTICULARS (WORN CONDITION)	UNITS	CONDUCTOR CONTACT
PERMISSIBLE WEAR	% OF AREA	30.00
WEIGHT OF CONTACT WIRE	LB/FT	0.7441
WEIGHT OF CONTACT WIRE WITH ICE (O)	LB/FT	0.977
WEIGHT OF CONTACT WIRE WITH ICE (NO)	LB/FT	1.366
CONDUCTOR TENSION AT:	–	–
0^F WIND & ICE (NO)	LB	3919
CONDUCTOR BREAKING LOAD	LB	8267
MINIMUM SAFETY FACTOR	–	2.05

SINGLE WIRE FIXED–TENSIONED (SWFT)		
CONDUCTOR PARTICULARS (WORN CONDITION)	UNITS	CONDUCTOR CONTACT
PERMISSIBLE WEAR	% OF AREA	30.00
WEIGHT OF CONTACT WIRE	LB/FT	0.7441
WEIGHT OF CONTACT WIRE WITH ICE (O)	LB/FT	0.977
WEIGHT OF CONTACT WIRE WITH ICE (NO)	LB/FT	1.366
CONDUCTOR TENSION AT:	–	–
0^F WIND & ICE (NO)	LB	4452
CONDUCTOR BREAKING LOAD	LB	8267
MINIMUM SAFETY FACTOR	–	1.80

DATE	APPR.		
REVISED			
ISSUED:			
		REFERENCE	

RECOMMENDED: _____ DEPUTY CHIEF ENGINEER

APPROVED: _____ CHIEF TRANSPORTATION ENGINEER

D.C. DEPARTMENT OF TRANSPORTATION

STREETCAR STANDARD DRAWINGS

OVERHEAD CONTACT SYSTEM TECHNICAL SHEET CONDUCTOR PARTICULARS

PROJECT ENG. _____
DESIGNED BY _____
CHECKED BY _____
DRAWN BY _____
PROJECT MGR. CV
DIVISION CHIEF
DATE _____
FILE _____
DWG. NO. OCT-1

c:\pwworking\pitt\d0537312\OCT-1f.dgn
1/25/2012

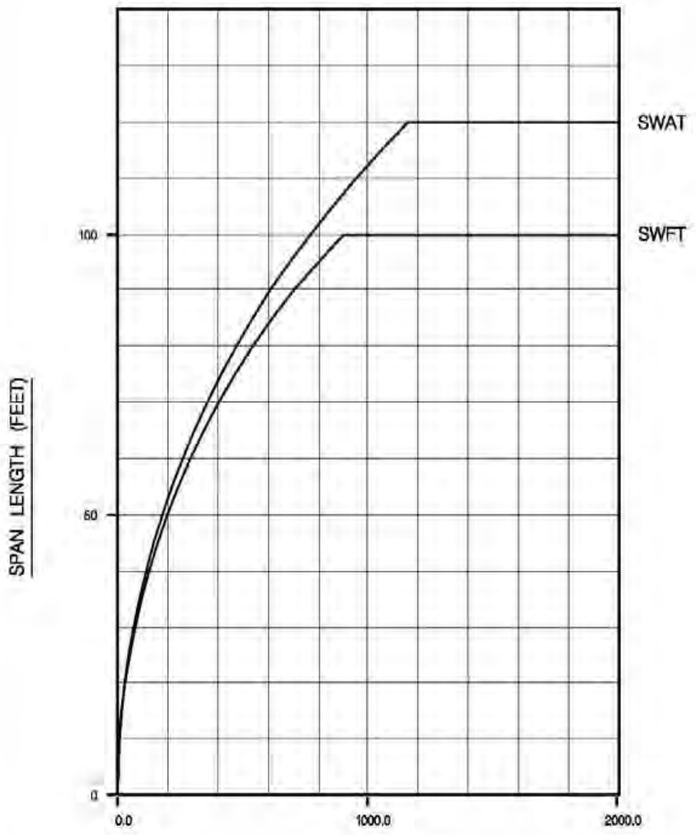

STRUCTURE SPACING SWAT

SPAN LENGTH (FEET)	STATIC OFFSET (INCHES)	STATIC OFFSET (FEET)	BLOW-OFF (FEET)	MINIMUM RADIUS (FEET)
30	10.42	.868	0.015	63.1
35	10.35	.862	0.020	86.1
40	10.27	.856	0.027	112.8
45	10.19	.849	0.034	143.4
50	10.09	.841	0.042	177.8
55	9.99	.832	0.050	216.2
60	9.87	.823	0.060	258.7
65	9.75	.812	0.070	305.5
70	9.61	.801	0.082	356.6
75	9.47	.789	0.094	412.3
80	9.31	.776	0.107	472.6
85	9.15	.762	0.120	537.9
90	8.97	.748	0.135	608.4
95	8.79	.732	0.150	684.2
100	8.59	.716	0.167	765.6
105	8.39	.699	0.184	853.0
110	8.17	.681	0.202	946.7
115	7.95	.662	0.220	1047.0
120	7.71	.643	0.240	1154.4

STRUCTURE SPACING SWFT

SPAN LENGTH (FEET)	STATIC OFFSET (INCHES)	STATIC OFFSET (FEET)	BLOW-OFF (FEET)	MINIMUM RADIUS (FEET)
30	8.32	.693	0.023	69.9
35	8.22	.685	0.031	95.6
40	8.11	.676	0.040	125.6
45	7.98	.665	0.051	160.0
50	7.84	.653	0.063	199.0
55	7.68	.640	0.076	242.9
60	7.51	.626	0.090	291.7
65	7.32	.610	0.106	345.9
70	7.12	.593	0.123	405.6
75	6.90	.575	0.141	471.3
80	6.67	.556	0.160	543.3
85	6.42	.535	0.181	622.0
90	6.16	.513	0.203	708.0
95	5.88	.490	0.226	801.8
100	5.59	.466	0.250	904.1

NOTES:

1. THE CONDITIONS FOR THE STRUCTURE SPACING CHART & THE TABLES ARE 60 DEGREES F WITH A WIND SPEED OF 40 MPH.
2. THE SPANS SHOWN ARE THE ABSOLUTE MAXIMUM FOR THE RESPECTIVE CURVES. FOR DESIGN CONSIDERATIONS THE MAXIMUM SPAN IS REDUCED BY 5 FEET TO CATER FOR SITE ADJUSTMENTS IF OBSTRUCTIONS ARE ENCOUNTERED, DURING CONSTRUCTION.
3. MAXIMUM STRUCTURE SPACINGS FOR SPANS WHOLLY OVER CONSTANT RADIUS TRACK CURVE, ARE TO BE DETERMINED FROM THE GRAPHS AND RELATED NOTES. FOR ALL OTHER HORIZONTAL ALIGNMNET COMBINATIONS, SPACING MUST SATISFY MAXIMUM STATIC MIDSPAN OFFSET CRITERIA APPLIED TO STAGGERED CONTACT WIRE.
4. THE MAXIMUM STATIC MIDSPAN OFFSET IS THE VALUE THE CONTACT WIRE CAN BE FROM THE CENTER LINE OF A STATIC PANTOGRAPH UNDER STILL AIR CONDITIONS MEASURED AT MIDSPAN.
5. WHERE AS-BUILT STATIC MIDSPAN OFFSET EXCEEDS THE MAXIMUM VALUE LISTED IN THE TABLE, FURTHER CONSTRUCTION MAY ONLY CONTINUE AFTER SITE SPECIFC APPROVAL BY THE DISTRICT.
6. INSTALLED CONTACT WIRE SPANS MAY BE ACCEPTED WITH 1 INCH OF ADDITIONAL MIDSPAN OFFSET CONSTRUCTION TOLERANCE ABOVE THE MAXIMUM VALUES LISTED.
7. MAXIMUM CONTACT WIRE STAGGER = 9"
8. FOR GENERAL NOTES, SEE DWG. OCT-01.

D.C. DEPARTMENT OF TRANSPORTATION

DATE	APPR.		RECOMMENDED: Mohammad Khalid — DEPUTY CHIEF ENGINEER
REVISED			
ISSUED:		REFERENCE	APPROVED: [signature] — CHIEF TRANSPORTATION ENGINEER

STREETCAR STANDARD DRAWINGS

PROJECT ENG.
DESIGNED BY
CHECKED BY
DRAWN BY
PROJECT MGR. CY

OVERHEAD CONTACT SYSTEM
TECHNICAL SHEET
AUTO & FIXED-TENSIONED SINGLE CONTACT
WIRE SPAN LENGTH CHART

DIVISION CHIEF
DATE
FILE
DWG. NO. OCT-12

c:\pwworking\plit\d0537312\OCT-12.dgn
1/20/2012

SINGLE CONTACT AUTO TENSIONED ALONG TRACK MOVEMENT (M) INCHES

TEMP ^F	DISTANCE FROM MID-POINT ANCHOR (FEET)													
	200	400	600	800	1000	1200	1400	1600	1800	2000	2200	2400	2600	2640
5	-1.241	-2.482	-3.722	-4.963	-6.204	-7.445	-8.685	-9.926	-11.167	-12.408	-13.649	-14.890	-16.130	-16.379
10	-1.128	-2.256	-3.384	-4.512	-5.640	-6.768	-7.896	-9.024	-10.152	-11.280	-12.408	-13.536	-14.664	-14.890
20	-0.902	-1.805	-2.707	-3.610	-4.512	-5.414	-6.317	-7.219	-8.122	-9.024	-9.926	-10.829	-11.731	-11.912
30	-0.677	-1.354	-2.030	-2.707	-3.384	-4.061	-4.738	-5.414	-6.091	-6.768	-7.445	-8.122	-8.798	-8.934
40	-0.451	-0.902	-1.354	-1.805	-2.256	-2.707	-3.158	-3.610	-4.061	-4.512	-4.963	-5.414	-5.866	-5.956
50	-0.226	-0.451	-0.677	-0.902	-1.126	-1.354	-1.579	-1.805	-2.030	-2.256	-2.482	-2.707	-2.933	-2.978
60	0	0	0	0	0	0	0	0	0	0	0	0	0	0
70	0.226	0.451	0.677	0.902	1.126	1.354	1.579	1.805	2.030	2.256	2.482	2.707	2.933	2.978
80	0.451	0.902	1.354	1.805	2.256	2.707	3.158	3.610	4.061	4.512	4.963	5.414	5.866	5.956
90	0.677	1.354	2.030	2.707	3.384	4.061	4.738	5.414	6.091	6.768	7.445	8.122	8.798	8.934
100	0.902	1.805	2.707	3.610	4.512	5.414	6.317	7.219	8.122	9.024	9.926	10.829	11.731	11.912
110	1.128	2.256	3.384	4.512	5.640	6.768	7.896	9.024	10.152	11.280	12.408	13.536	14.664	14.890
120	1.354	2.707	4.061	5.414	6.768	8.122	9.475	10.929	12.182	13.536	14.890	16.243	17.597	17.868
125	1.466	2.933	4.399	5.866	7.332	8.798	10.265	11.731	13.198	14.664	16.130	17.597	19.063	19.356

-(VE) INDICATES MOVEMENT TOWARD MID-POINT ANCHOR
+(VE) INDICATES MOVEMENT AWAY FROM MID-POINT ANCHOR

SINGLE CONTACT AUTO TENSIONED STAGGER CHANGE (X) INCHES

ALONG TRACK MOVEMENT (INCHES)	CANTILEVER REACH (DIMENSION R FEET-INCHES)												
	6.5	7	7.5	8	8.5	9	9.5	10	10.5	11	11.5	12	12.5
2	0.03	0.02	0.02	0.02	0.02	0.02	0.02	0.02	0.02	0.02	0.01	0.01	0.01
4	0.10	0.10	0.09	0.08	0.08	0.07	0.07	0.07	0.06	0.06	0.06	0.06	0.05
6	0.23	0.21	0.20	0.19	0.18	0.17	0.16	0.15	0.14	0.14	0.13	0.13	0.12
8	0.41	0.38	0.36	0.33	0.31	0.30	0.28	0.27	0.25	0.24	0.23	0.22	0.21
10	0.64	0.60	0.56	0.52	0.49	0.46	0.44	0.42	0.40	0.38	0.36	0.35	0.33
12	0.93	0.86	0.80	0.75	0.71	0.67	0.63	0.60	0.57	0.55	0.52	0.50	0.48
14	1.27	1.17	1.10	1.03	0.97	0.91	0.86	0.82	0.78	0.74	0.71	0.68	0.65
16	1.65	1.54	1.43	1.34	1.26	1.19	1.13	1.07	1.02	0.97	0.93	0.89	0.86
18	2.11	1.95	1.82	1.70	1.60	1.51	1.43	1.36	1.29	1.23	1.18	1.13	1.08
20	2.61	2.42	2.25	2.11	1.98	1.87	1.77	1.68	1.60	1.52	1.46	1.40	1.34
22	3.17	2.93	2.73	2.55	2.40	2.26	2.14	2.03	1.94	1.85	1.78	1.69	1.62
24	3.78	3.50	3.26	3.05	2.86	2.70	2.55	2.42	2.31	2.20	2.10	2.01	1.93
26	4.46	4.13	3.84	3.59	3.37	3.18	3.00	2.85	2.71	2.59	2.47	2.37	2.27
28	5.20	4.80	4.47	4.17	3.92	3.69	3.49	3.31	3.15	3.00	2.87	2.75	2.64

STAGGER EFFECT (E) INCHES

B-V (INCHES)	STAGGER DIFFERENCE (SD) INCHES								
	2	4	6	8	10	12	14	16	18
2	0.125	0.500	1.125	2.000	3.125	4.500	6.125	8.000	10.125
4	0.063	0.250	0.563	1.000	1.563	2.250	3.063	4.000	5.063
6	0.042	0.167	0.375	0.667	1.042	1.500	2.042	2.667	3.375
8	0.031	0.125	0.281	0.500	0.781	1.125	1.531	2.000	2.531
10	0.025	0.100	0.225	0.400	0.625	0.900	1.225	1.600	2.025
12	0.021	0.083	0.188	0.333	0.521	0.750	1.021	1.333	1.688
14	0.018	0.071	0.161	0.286	0.446	0.643	0.875	1.143	1.446
16	0.016	0.063	0.141	0.250	0.391	0.563	0.766	1.000	1.266
18	0.014	0.056	0.125	0.222	0.347	0.500	0.681	0.889	1.125
20	0.013	0.050	0.113	0.200	0.313	0.450	0.613	0.800	1.013

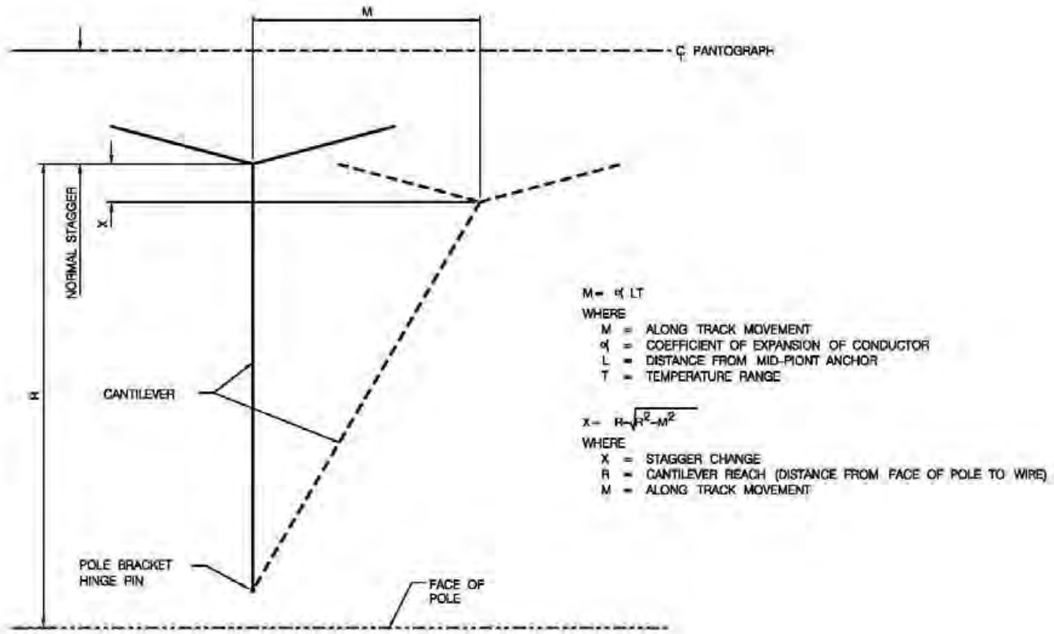

M = α(LT
WHERE
M = ALONG TRACK MOVEMENT
α(= COEFFICIENT OF EXPANSION OF CONDUCTOR
L = DISTANCE FROM MID-PIONT ANCHOR
T = TEMPERATURE RANGE

$X = R - \sqrt{R^2 - M^2}$
WHERE
X = STAGGER CHANGE
R = CANTILEVER REACH (DISTANCE FROM FACE OF POLE TO WIRE)
M = ALONG TRACK MOVEMENT

ALONG TRACK MOVEMENT AND STAGGER CHANGE

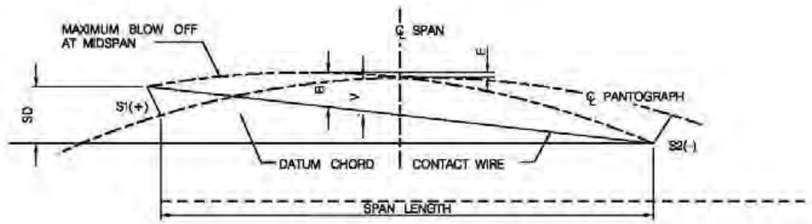

STAGGER EFFECT

SD=S1-S2
WHERE
SD = STAGGER DIFFERENCE
S1, S2 = STAGGER AT EACH SUPPORT

$E = SD16^2(B-V)$
WHEN SD > 4 (B-V)
E=0 WHEN SD ≤4(B-V)
WHERE
E = STAGGER EFFECT
SD = STAGGER DIFFERENT
B = CONDUCTOR BLOWOFF
V = VERSINE

			RECOMMENDED: Mohammad Khalil — DEPUTY CHIEF ENGINEER
DATE	APPR.		APPROVED: — CHIEF TRANSPORTATION ENGINEER
REVISED			
ISSUED:		REFERENCE	

D.C. DEPARTMENT OF TRANSPORTATION

STREETCAR STANDARD DRAWINGS

PROJECT ENG.
DESIGNED BY
CHECKED BY
DRAWN BY
PROJECT MGR. CV

OVERHEAD CONTACT SYSTEM
TECHNICAL SHEET
AUTO-TENSIONED SINGLE CONTACT WIRE ALONG TRACK MOVEMENT AND STAGGER CHANGE

DIVISION CHIEF
DATE
FILE
DWG. NO. OCT-13

c:\pwworking\pitt\d0537312\OCT-13.dgn
12/9/2012

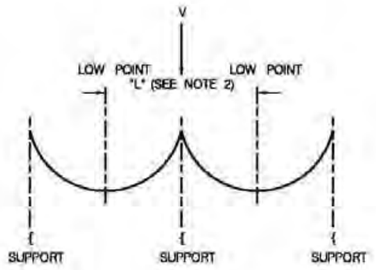

V = VERTICAL LOAD

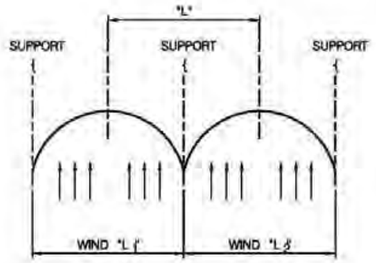

$$L = \frac{L_1 + L_2}{2}$$

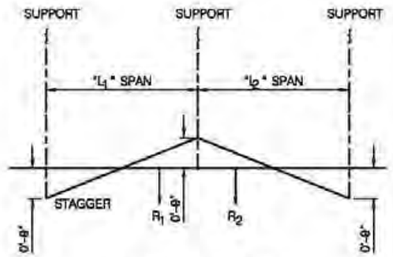

RADIAL LOAD (R) AT SUPPORT
R = R1 + R2
RADIAL LOAD IS BASED ON 9" STAGGER AT SUPPORTS

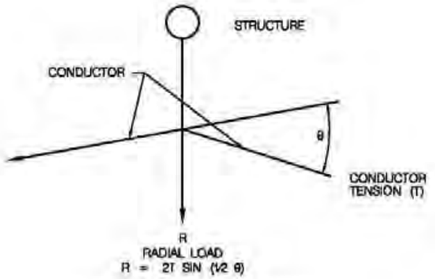

TO DETERMINE RADIAL LOAD, MEASURE ANGLE θ AND USE TABLE TO DETERMINE LOAD FOR CONDITION REQUIRED.

VERTICAL LOADING

SPAN (FEET)	CONDITION AND LOAD VALUE (V) (LB)		
	BARE	ICE (NO)	ICE (O)
20	21.3	35.2	26.7
25	26.6	44.0	33.3
30	31.9	52.8	40.0
35	37.2	61.6	46.7
40	42.5	70.4	53.3
45	47.8	79.2	60.0
50	53.2	88.0	66.7
55	58.5	96.7	73.3
60	63.8	105.5	80.0
65	69.1	114.3	86.6
70	74.4	123.1	93.3
75	79.7	131.9	100.0
80	85.0	140.7	106.6
85	90.4	149.5	113.3
90	95.7	158.3	120.0
95	101.0	167.1	126.6
100	106.3	175.9	133.3
105	111.6	184.7	140.0
110	116.9	193.5	146.6
115	122.2	202.3	153.3
120	127.6	211.1	160.0

WIND LOADING

SPAN (FEET)	CONDITION AND FORCE (WIND LOADING) (LB)			
	BARE WIRE 70 MPH WIND	BARE WIRE 55 MPH WIND	½" ICE CW (NO) 40 MPH WIND	¼" ICE CW (O) 40 MPH WIND
	CW	CW	CW	CW
20	13.0	8.0	11.1	7.6
25	16.2	10.0	13.8	9.6
30	19.4	12.0	16.6	11.5
35	22.7	14.0	19.4	13.4
40	25.9	16.0	22.1	15.3
45	29.2	18.0	24.9	17.2
50	32.4	20.0	27.7	19.1
55	35.7	22.0	30.4	21.0
60	38.9	24.0	33.2	22.9
65	42.1	26.0	35.9	24.8
70	45.4	28.0	38.7	26.8
75	48.6	30.0	41.5	28.7
80	51.9	32.0	44.2	30.6
85	55.1	34.0	47.0	32.5
90	58.3	36.0	49.8	34.4
95	61.6	38.0	52.5	36.3
100	64.8	40.0	55.3	38.2
105	68.1	42.0	58.1	40.1
110	71.3	44.0	60.8	42.0
115	74.5	46.0	63.6	44.0
120	77.8	48.0	66.4	45.9

RADIAL LOAD TANGENT TRACK

SPAN (FEET)	CONDITION AND RADIAL LOAD (LB) (R1 AND R2)		
	60°F NO WIND, NO ICE	-5°F, 40 MPH WIND ½" ICE	-5°F, 40 MPH WIND ¼" ICE CW
	CW	CW	CW
20	448.7	617.0	602.5
25	359.4	494.0	482.5
30	299.6	412.0	402.3
35	256.9	353.2	344.9
40	224.8	309.2	301.9
45	199.9	274.8	268.4
50	179.9	247.4	241.6
55	163.6	224.9	219.6
60	150.0	206.2	201.3
65	138.4	190.3	185.9
70	128.5	176.7	172.6
75	120.0	165.0	161.1
80	112.5	154.7	151.0
85	105.9	145.6	142.1
90	100.0	137.5	134.2
95	94.7	130.2	127.2
100	90.0	123.7	120.8
105	85.7	117.8	115.1
110	81.8	112.5	109.8
115	78.3	107.6	105.1
120	75.0	103.1	100.7

RADIAL LOAD BY ANGLE

ANGLE (DEGREES) θ	CONDITION AND RADIAL LOAD (LB) "R"		
	50°F NO WIND, NO ICE	-5°F, 40 MPH WIND ½" ICE	-5°F, 40 MPH WIND ¼" ICE CW
	CW	CW	CW
0.5	26.2	36.0	35.2
1.0	52.4	72.0	70.3
1.5	78.5	108.0	105.4
2.0	104.7	144.0	140.6
2.5	130.9	180.0	175.7
3.0	157.1	216.0	210.9
4.0	209.4	287.9	281.2
5.0	261.7	359.9	351.4
6.0	314.0	431.8	421.6
7.0	366.3	503.7	491.8
8.0	418.5	575.5	562.0
9.0	470.8	647.3	632.1
10.0	522.9	719.0	702.1
11.0	575.1	790.7	772.1
12.0	627.2	862.4	842.1
13.0	679.2	933.9	912.0
14.0	731.2	1005.4	981.8
15.0	783.2	1076.8	1051.5

NOTES:

1. L = SUM OF THE DISTANCE TO THE LOW POINT OF THE CONTACT WIRE ON BOTH SIDES OF THE SUPPORT.

2. ICE (NON OPERATING CONDITION) IS ½" RADIAL ICE ON CONTACT WIRE. ICE (OPERATING CONDITION) IS ¼" RADIAL ICE ON CONTACT WIRE.

DATE	APPR.		
REVISED			
ISSUED:			REFERENCE

RECOMMENDED: _____ DEPUTY CHIEF ENGINEER

APPROVED: _____ CHIEF TRANSPORTATION ENGINEER

D.C. DEPARTMENT OF TRANSPORTATION

STREETCAR STANDARD DRAWINGS

OVERHEAD CONTACT SYSTEM
TECHNICAL SHEET
AUTO-TENSIONED SINGLE CONTACT WIRE
RADIAL AND WIND LOADS

PROJECT ENG.
DESIGNED BY
CHECKED BY
DRAWN BY
PROJECT MGR. CV

DIVISION CHIEF
DATE
FILE
DWG. NO. OCT-14

c:\pwworking\pitt\d0537315\OCT-14.dgn
1/29/2012

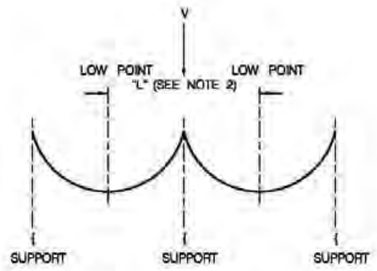

V = VERTICAL LOAD

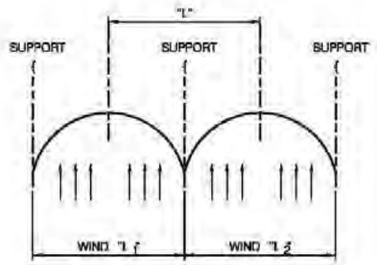

$$L = \frac{L_1 + L_2}{2}$$

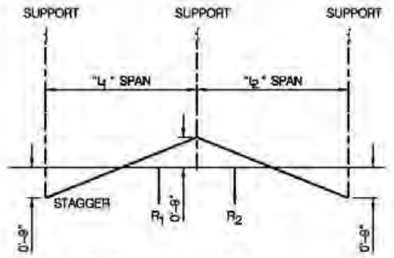

RADIAL LOAD (R) AT SUPPORT
R = R1 + R2
RADIAL LOAD IS BASED ON 9" STAGGER AT SUPPORTS

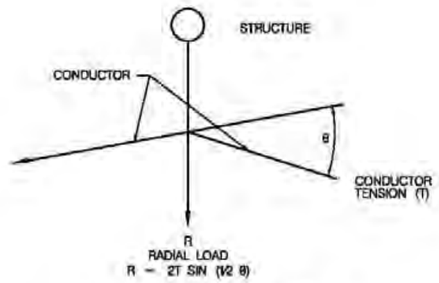

TO DETERMINE RADIAL LOAD, MEASURE ANGLE θ AND USE TABLE TO DETERMINE LOAD FOR CONDITION REQUIRED.

VERTICAL LOADING

SPAN (FEET)	CONDITION AND LOAD VALUE (V) (LB)		
	BARE	ICE (NO)	ICE (I)
20	21.3	35.2	26.7
25	26.6	44.0	33.3
30	31.9	52.8	40.0
35	37.2	61.6	46.7
40	42.5	70.4	53.3
45	47.8	79.2	60.0
50	53.2	88.0	66.7
55	58.5	96.7	73.3
60	63.8	105.5	80.0
65	69.1	114.3	86.6
70	74.4	123.1	93.3
75	79.7	131.9	100.0
80	85.0	140.7	106.6
85	90.4	149.5	113.3
90	95.7	158.3	120.0
95	101.0	167.1	126.6
100	106.3	175.9	133.3

WIND LOADING

SPAN (FEET)	CONDITION AND FORCE (WIND LOADING) (LB)			
	BARE WIRE 70 MPH WIND	BARE WIRE 55 MPH WIND	1/2" ICE CW (NO) 40 MPH WIND	1/4" ICE CW (O) 40 MPH WIND
	CW	CW	CW	CW
20	13.0	8.0	11.1	7.6
25	16.2	10.0	13.8	9.6
30	19.4	12.0	16.6	11.5
35	22.7	14.0	19.4	13.4
40	25.9	16.0	22.1	15.3
45	29.2	18.0	24.9	17.2
50	32.4	20.0	27.7	19.1
55	35.7	22.0	30.4	21.0
60	38.9	24.0	33.2	22.9
65	42.1	26.0	35.9	24.8
70	45.4	56.0	38.7	26.8
75	48.6	30.0	41.5	28.7
80	51.9	32.0	44.2	30.6
85	55.1	34.0	47.0	32.5
90	58.3	36.0	49.8	34.4
95	61.6	38.0	52.5	36.3
100	64.8	40.0	55.3	38.2

RADIAL LOAD TANGENT TRACK

SPAN (FEET)	CONDITION AND RADIAL LOAD (LB) (R1 AND R2)		
	60 DEG F NO WIND, NO ICE	-5 DEG F, 40 MPH WIND 1/2" ICE	-5 DEG F, 40 MPH WIND 1/4" ICE CW
	CW	CW	CW
20	299.2	681.5	669.7
25	239.6	545.7	536.3
30	199.8	455.0	447.1
35	171.3	390.2	383.4
40	149.9	341.5	335.5
45	133.3	303.6	298.3
50	119.9	273.2	268.5
55	109.1	248.4	244.1
60	100.0	227.7	223.8
65	92.3	210.2	206.8
70	85.7	195.2	191.8
75	80.0	182.2	179.0
80	75.0	170.8	167.9
85	70.6	160.8	158.0
90	66.7	151.8	149.2
95	63.2	143.9	141.4
100	60.0	136.7	134.3

RADIAL LOAD BY ANGLE

ANGLE (DEGREES) θ	CONDITION AND RADIAL LOAD (LB) "R"		
	60 DEG F NO WIND, NO ICE	-5 DEG F, 40 MPH WIND 1/2" ICE	-5 DEG F, 40 MPH WIND 1/4" ICE CW
	CW	CW	CW
0.5	17.5	39.8	39.1
1.0	34.9	79.5	78.1
1.5	52.4	119.3	117.2
2.0	69.8	159.0	156.3
2.5	87.3	198.8	195.3
3.0	104.7	238.5	234.4
4.0	139.6	318.0	312.5
5.0	174.5	397.5	390.6
6.0	209.3	476.9	468.6
7.0	244.2	556.3	546.6
8.0	279.0	635.6	624.6
9.0	313.8	714.8	702.5
10.0	348.6	794.2	780.4
11.0	383.4	873.3	858.2
12.0	418.1	952.5	935.9
13.0	452.8	1031.5	1013.6
14.0	487.5	1110.5	1091.2
15.0	522.1	1189.4	1168.7

NOTES:

1. L = SUM OF THE DISTANCE TO THE LOW POINT OF THE CONTACT WIRE ON BOTH SIDES OF THE SUPPORT.

2. ICE (NON-OPERATING CONDITION) IS 1/2" RADIAL ICE ON BOTH CONDUCTORS. ICE (OPERATING CONDITION) IS 1/4" RADIAL ICE ON CONTACT WIRE.

DATE	APPR.	
REVISED		
ISSUED:		
		REFERENCE

RECOMMENDED: Mohammed Khalil
DEPUTY CHIEF ENGINEER

APPROVED:
CHIEF TRANSPORTATION ENGINEER

D.C. DEPARTMENT OF TRANSPORTATION

STREETCAR STANDARD DRAWINGS

OVERHEAD CONTACT SYSTEM
TECHNICAL SHEET
FIXED TERMINATED SINGLE CONTACT WIRE
RADIAL AND WIND LOADS

PROJECT ENG.
DESIGNED BY
CHECKED BY
DRAWN BY
PROJECT MGR. CV

DIVISION CHIEF
DATE
FILE
DWG. NO OCT-15

c:\pw\working\pit1\d0537312\OCT-15.dgn
1/29/2012

CONTACT WIRE SAGS SWAT

ACTUAL SPAN (FEET)	EQUIVALENT SPAN = 100 FEET					
	TEMPERATURE - DEGREES F					
	-5	0	5	10	15	20 TO 125
20	0.16	0.17	0.18	0.19	0.20	0.21
25	0.25	0.26	0.28	0.29	0.31	0.33
30	0.36	0.38	0.40	0.42	0.45	0.48
35	0.49	0.52	0.55	0.58	0.61	0.65
40	0.64	0.68	0.71	0.75	0.80	0.85
45	0.81	0.86	0.90	0.95	1.01	1.08
50	1.00	1.06	1.11	1.18	1.25	1.33
55	1.21	1.28	1.35	1.43	1.51	1.61
60	1.44	1.52	1.60	1.70	1.80	1.91
65	1.70	1.79	1.88	1.99	2.11	2.25
70	1.97	2.07	2.18	2.31	2.45	2.60
75	2.26	2.38	2.51	2.65	2.81	2.99
80	2.57	2.70	2.85	3.02	3.20	3.40
85	2.90	3.05	3.22	3.41	3.61	3.84
90	3.25	3.42	3.61	3.82	4.05	4.31
95	3.62	3.81	4.02	4.25	4.51	4.80
100	4.01	4.22	4.46	4.71	5.00	5.32
105	4.42	4.66	4.91	5.20	5.51	5.86
110	4.86	5.11	5.39	5.70	6.05	6.43
115	5.31	5.59	5.89	6.23	6.61	7.03
120	5.78	6.09	6.42	6.79	7.20	7.65

CONTACT WIRE SAGS SWFT

ACTUAL SPAN (FEET)	EQUIVALENT SPAN = 100 FEET										
	TEMPERATURE - DEGREES F										
	-5	0	15	30	45	60	75	90	105	120	125
20	0.14	0.15	0.20	0.21	0.25	0.32	0.40	0.51	0.61	0.72	0.76
25	0.22	0.24	0.31	0.33	0.40	0.50	0.63	0.79	0.96	1.13	1.18
30	0.32	0.34	0.45	0.47	0.57	0.72	0.91	1.14	1.38	1.63	1.70
35	0.44	0.46	0.61	0.64	0.78	0.98	1.24	1.55	1.88	2.21	2.31
40	0.58	0.60	0.80	0.84	1.02	1.28	1.62	2.02	2.46	2.89	3.02
45	0.73	0.76	1.01	1.06	1.29	1.61	2.04	2.56	3.11	3.66	3.83
50	0.90	0.94	1.25	1.31	1.59	1.99	2.52	3.16	3.84	4.51	4.72
55	1.09	1.14	1.51	1.58	1.93	2.41	3.05	3.83	4.65	5.46	5.71
60	1.30	1.36	1.80	1.88	2.29	2.87	3.64	4.56	5.53	6.50	6.80
65	1.52	1.59	2.11	2.21	2.69	3.37	4.27	5.35	6.49	7.63	7.98
70	1.76	1.85	2.45	2.56	3.12	3.91	4.95	6.20	7.53	8.85	9.26
75	2.02	2.12	2.81	2.94	3.58	4.48	5.68	7.12	8.64	10.16	10.63
80	2.30	2.41	3.20	3.34	4.08	5.10	6.46	8.10	9.83	11.56	12.09
85	2.60	2.72	3.61	3.77	4.60	5.76	7.30	9.14	11.10	13.05	13.66
90	2.91	3.05	4.05	4.23	5.16	6.46	8.18	10.25	12.44	14.63	15.30
95	3.25	3.40	4.51	4.71	5.75	7.20	9.11	11.42	13.8	16.30	17.05
100	3.60	3.77	5.00	5.22	6.37	7.97	10.10	12.65	15.36	18.06	18.89

NOTES:

1. THE EQUIVALENT SPAN FOR THE SINGLE CONTACT WIRE SYSTEM IS DETERMINED BY THE FOLLOWING FORMULA:

$$\sqrt{\frac{L_1^3 + L_2^3 + L_3^3 + \cdots L_N^3}{L_1 + L_2 + L_3 + \cdots L_N}}$$

WHERE $L_1, L_2, L_3 \cdots L_N$ ARE THE LENGTHS OF THE INDIVIDUAL SPANS IN EACH FULL TENSION LENGTH (ANCHOR TO ANCHOR).

2. FOR INTERMEDIATE TEMPERATURES IN THE ERECTION TENSION TABLES, BETWEEN THOSE LISTED, THE TENSION VALUE SHALL BE INTERPOLATED ON A STRAIGHT LINE BASIS.

3. TO DETERMINE SAG OF CONTACT WIRE AT A SPECIFIC TEMPERATURE INITIALLY ESTABLISH THE EQUIVALENT SPAN FOR THE TENSION LENGTH AS DESCRIBED ABOVE. FROM EQUIVALENT SPAN TABLE READ WIRE SAG USING THE ACTUAL SPAN AND TEMPERATURE.

ERECTION TENSIONS SWAT

L =	Equivalent Span [ft]	40	50	60	70	80	90	100
tn = New Temperature	0	5463	5448	5431	5410	5387	5361	5331
	10	5050	5037	5021	5002	4980	4956	4929
	20	4638	4626	4611	4594	4575	4554	4529
	30	4226	4216	4203	4189	4173	4155	4135
	40	3815	3808	3799	3788	3775	3762	3747
	50	3407	3402	3397	3390	3384	3375	3367
	60	3000	3000	3000	3000	3000	3000	3000
	70	2598	2604	2612	2621	2629	2639	2650
	80	2202	2219	2237	2257	2279	2301	2323
	90	1820	1850	1883	1919	1956	1992	2030
	100	1460	1511	1563	1617	1670	1722	1772
	110	1144	1218	1292	1362	1429	1493	1555
	120	893	988	1075	1157	1235	1308	1376

ERECTION TENSIONS SWFT

L =	Equivalent Span [ft]	40	50	60	70	80	90	100
tn = New Temperature	0	4423	4386	4342	4290	4230	4165	4094
	10	4012	3977	3935	3887	3832	3771	3705
	20	3601	3570	3532	3488	3440	3386	3327
	30	3194	3166	3134	3096	3055	3009	2962
	40	2789	2767	2742	2713	2682	2649	2613
	50	2390	2377	2361	2346	2328	2309	2291
	60	2000	2000	2000	1999	2000	2000	2000
	70	1627	1647	1667	1688	1709	1729	1746
	80	1288	1332	1377	1421	1461	1499	1535
	90	1003	1075	1142	1204	1260	1312	1360
	100	790	880	962	1036	1103	1164	1219
	110	644	741	829	907	979	1045	1106
	120	545	642	729	810	883	951	1014

			RECOMMENDED: Mohammad Khalid, DEPUTY CHIEF ENGINEER	D.C. DEPARTMENT OF TRANSPORTATION
				STREETCAR STANDARD DRAWINGS
DATE	APPR.		APPROVED: CHIEF TRANSPORTATION ENGINEER	OVERHEAD CONTACT SYSTEM TECHNICAL SHEET SWAT& SWFT ERECTION TENSIONS
REVISED				
ISSUED:		REFERENCE		DWG NO. OCT-16

c:\pwworking\pitt\d0537312\OCT-16.dgn
1/20/2009

OUTBOUND ROUTE	MISC. ASSY. COMMENT	
	IN-SPAN ASSEMBLY	
	SUPPORT ASSEMBLY	
	HEIGHT OF POLE BASE	
	POLE SET-OUT	
	POLE REFERENCE, RAKE	
	TERMINATION HEIGHT	
	CONTACT WIRE HEIGHT	
	STAGGER AND DIRECTION	
	STRUCTURE NUMBER	
	STATIONING	

NOTES:

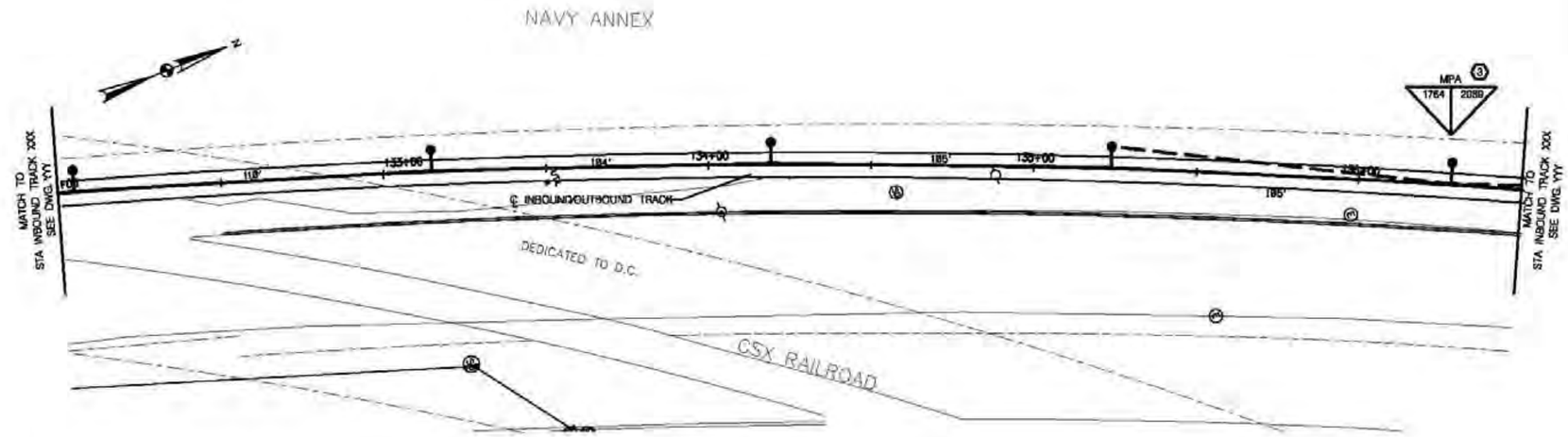

INBOUND ROUTE	STATIONING									
	STRUCTURE NUMBER									
	STAGGER AND DIRECTION									
	CONTACT WIRE HEIGHT									
	TERMINATION HEIGHT									
	POLE REFERENCE, RAKE									
	POLE SET-OUT									
	HEIGHT OF POLE BASE									
	SUPPORT ASSEMBLY									
	IN-SPAN ASSEMBLY									
	MISC. ASSY. COMMENT									

0 20' 40'

DATE	APPR.	
REVISED		
ISSUED:		REFERENCE

RECOMMENDED: Mohamad Khalil
DEPUTY CHIEF ENGINEER

APPROVED:
CHIEF TRANSPORTATION ENGINEER

D.C. DEPARTMENT OF TRANSPORTATION

STREETCAR STANDARD DRAWINGS

OVERHEAD CONTACT SYSTEM
SAMPLE LAYOUT PLAN

PROJECT ENG.
DESIGNED BY
CHECKED BY
DRAWN BY
PROJECT MGR. CV

DIVISION CHIEF
DATE
FILE
DWG. NO. OCP-01

c:\pwworking\pit1\d0537312\OCP-01.dgn
1/29/2012

FND STA	FND OFFSET ℄ REF. TRK TO ℄ FND	FND DIRECTION (LEFT/RIGHT)	FND FINISH LEVEL (+ABOVE OR -BELOW)	FND LOADING	FND TYPE	ORIENT. ANGLE	POLE REF	CONDUTS IN FND	COMMENTS

NOTES:

1. FOUNDATION OFFSET DIRECTION IS DETERMINED LOOKING IN THE DIRECTION OF INCREASING STATION.

2. FOUNDATION FINISH, (+ABOVE OR -BELOW) IS RELATED TO SIDEWALK LEVEL UNLESS NOTED OTHERWISE.

3. THE FOUNDATION CONSTRUCTION ℄ SHALL BE ORIENTED IN THE DIRECTION OF THE STRUCTURES RESULTANT LOAD. ORIENTATION IS MEASURED IN DEGREES CLOCKWISE FROM THE STATIONING LINE. ORIENTATION ANGLE IS 0 DEGREES UNLESS NOTED.

DATE	APPR.	
REVISED		
ISSUED:		REFERENCE

RECOMMENDED: Mohammad Khalid
DEPUTY CHIEF ENGINEER

APPROVED:
CHIEF TRANSPORTATION ENGINEER

D.C. DEPARTMENT OF TRANSPORTATION

STREETCAR STANDARD DRAWINGS

OVERHEAD CONTACT SYSTEM
SAMPLE FOUNDATION AND POLE SCHEDULE

PROJECT ENG. ____
DESIGNED BY ____
CHECKED BY ____
DRAWN BY ____
PROJECT MGR. CY

DIVISION CHIEF

DATE ____
FILE ____
DWG. NO. OCP-02

c:\pwworking\plt\d0537316\OCP-02.dgn
1/20/2012

OCS ACCEPTANCE MEASUREMENT DATA

A) TRACK	B) WIRE RUN NUMBER	C) DRAWING NUMBER	D) NAMES	E) SHEET NO.
	F) EQUIPMENT STYLE	G) CONDUCTOR TEMPERATURE	H) WEATHER & AIR TEMPERATURE	I) DATE:

		STRUCTURE									MID SPAN						BALANCEWEIGHT AMBIENT TEMP (F)			OVERLAPS & TURNOUTS HEIGHT OF IN-RUNNING & OUT-OF-RUNNING CONTACT WIRE				BRIDGES						
																									BB) BRIDGES CLEARANCES					TYPE OF DECK	
LINE NO.	J) STATION NO. IDENTIFICATION	K) STRUCTURE SETOUT FACE OF POLE TO CL TRACK (FT)	(IN)	L) FOUNDATION HEIGHT ABOVE T.O.R. + OR - (IN)	M) CROSSLEVEL (SUPERELEVATION) (IN)	N) STAGGER LOOKING UPSTATION RIGHT OR LEFT (IN)	O) C.W. HEIGHT (FT)	(IN)	P) SYSTEM HEIGHT (FT)	(IN)	Q) MIDSPAN OFFSET LOOKING UPSTATION RIGHT OR LEFT (IN)	R) MIDSPAN C.W. HEIGHT (FT)	(IN)	S) MIDSPAN CROSSLEVEL (SUPERELEVATION) (IN)	T) MIDSPAN SAG (IN)	U) GRADIENT	V) SPAN LENGTH (FT)	W) BALANCEWEIGHT RISE OR FALL (IN)	X) POS. OF BALANCEWEIGHT STOPS (IN)	Y) MEAN BWA POSITION @ 60^ F	Z) IN-RUNNING (FT)	(IN)	AA) OUT-RUNNING (FT)	(IN)	APPROX STA	CC) MINIMUM ELECTRICAL CLEARANCE C.W. TO U/S DECK AT BRIDGE FACE (F) LOWEST POINT (L) OR MID BRIDGE (M)	DD) BRIDGE VERT. CLEARANCE T.O.R. TO U/S DECK (FT)	(IN)	EE) MIN. ELECTRICAL CLEARANCE C.W. TO U/S DECK DIST.WITH 50 LBS C.W. UPLIFT (FT)	(IN)	CONCRETE (C) CONCRETE ENCASED (E) PRESTRESSED CONCRETE (PSC) OR STEEL (S)	REMARKS
1																															
2																															
3																															
4																															
5																															
6																															
7																															
8																															
9																															
10																															
11																															
12																															
13																															
14																															
15																															
16																															
17																															
18																															
19																															
20																															
21																															
22																															
23																															
24																															
25																															
26																															
27																															
28																															
29																															
30																															
31																															
32																															

REMARKS

			D.C. DEPARTMENT OF TRANSPORTATION
			RECOMMENDED: Mohammed Khalil — DEPUTY CHIEF ENGINEER
DATE	APPR.		STREETCAR STANDARD DRAWINGS
REVISED			APPROVED: — CHIEF TRANSPORTATION ENGINEER
ISSUED:		REFERENCE	OVERHEAD CONTACT SYSTEM SAMPLE ACCEPTANCE MEASUREMENT FORM

PROJECT ENG.
DESIGNED BY
CHECKED BY
DRAWN BY
PROJECT MGR. CV
DIVISION CHIEF
DATE
FILE
DWG. NO. OCP-03

c:\pwworking\pit\d0537312\OCP-03.dgn
1/20/2012

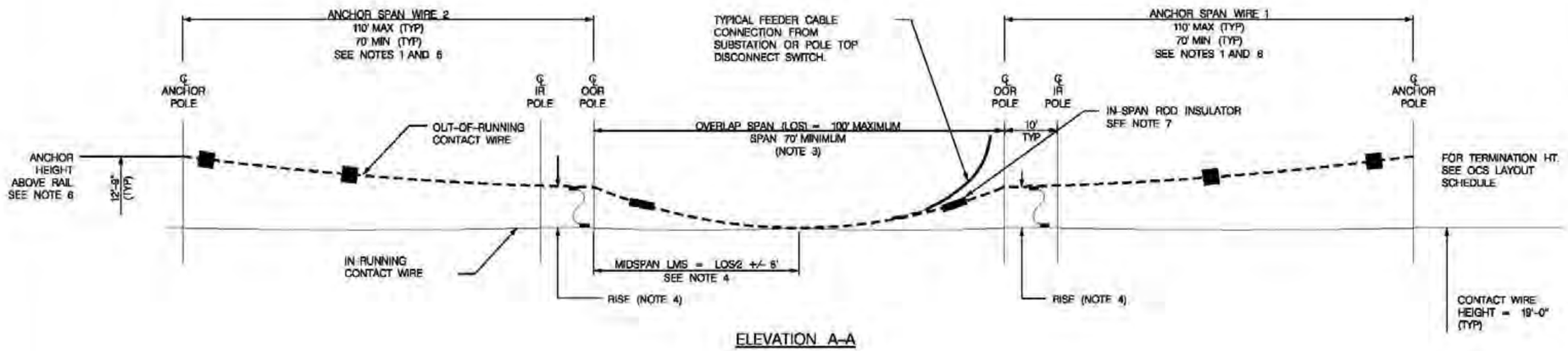

ELEVATION A–A

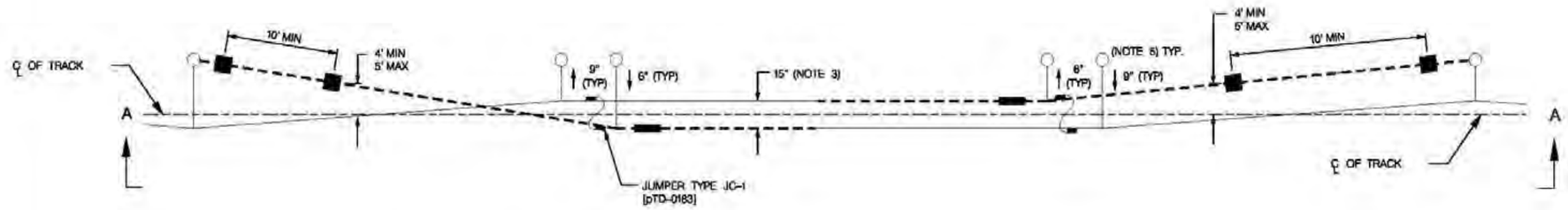

INSULATED OVERLAP ARRANGEMENT FOR SINGLE CONTACT WIRE TO SINGLE CONTACT WIRE (1)

TANGENT TRACK

NOTES:

1. DIMENSIONS SHOWN SUITABLE FOR 350 KCMIL CONTACT WIRE AT 3000 LB TENSION.
2. IN AREAS WHERE CENTER POLES ARE USED, THE OVERLAPS SHALL BE STAGGERED ONE SPAN ALONG THE TRACK TO REDUCE POLE LOADING AND PROVIDE ONE BALANCE WEIGHT ANCHOR PER POLE.
3. WHEN TRACK CURVATURE REQUIRES SPANS SHORTER THAN 70', USE TWO SPANS TO DEVELOP INSULATED OVERLAP WITH INSULATED KNUCKLE AND REGISTRATION IN THE MIDDLE, AND THE OVERLAPPING CONTACT WIRES 12 INCHES (MINIMUM) APART.
4. RISE SHALL BE MINIMUM 6", MAXIMUM 14". RISE SHALL BE FIELD ADJUSTED TO CAUSE THE MID SPAN WIRE HEIGHT TO BE EQUAL, AND TO BE THE AVERAGE OF THE ADJACENT TWO INRUNNING CONTACT WIRE HEIGHTS.
5. STAGGER VALUES ARE TYPICAL. SITE SPECIFIC VALUES SHALL BE IN ACCORDANCE WITH MAXIMUM STAGGER CRITERIA. FOR ACTUAL OVERLAP ARRANGEMENT AND STAGGER SEE OCS LAYOUT SCHEDULES.
6. TYPICAL ANCHOR SPAN SHOWN ARE SUITABLE FOR A VERTICAL DISTANCE BETWEEN INRUNNING CONTACT WIRE HEIGHT AND ANCHOR HEIGHT OF 21'-6".
7. WHERE VERTICAL CLEARANCE BETWEEN THE UNDERSIDE OF THE INSULATOR AND INRUNNING WIRE HEIGHT IS LESS THAN 6", A SECTION INSULATOR SHALL BE INSTALLED.

D.C. DEPARTMENT OF TRANSPORTATION

DATE	APPR.	REFERENCE
REVISED		
ISSUED:		

RECOMMENDED: Mohammad Khan
DEPUTY CHIEF ENGINEER

APPROVED:
CHIEF TRANSPORTATION ENGINEER

STREETCAR STANDARD DRAWINGS

OVERHEAD CONTACT SYSTEM
GENERAL ARRANGEMENT
INSULATED OVERLAP SWAT
ON CANTILEVER SUPPORT STRUCTURES

PROJECT ENG.
DESIGNED BY
CHECKED BY
DRAWN BY
PROJECT MGR. CY
DIVISION CHIEF
DATE
FILE
DWG. NO. CCD-01

c:\pwworking\plrt\d0537315\CCD-01.dgn
1/20/2021

NOTES:

1. SECOND LEVEL INSULATION TO BE LOCATED 10FT FROM TRACK CENTERLINE EXCEPT IN CASES WHEN THE POLE FACE IS LESS THAN 11'-3" FROM TRACK CENTERLINE, A MINIMUM OF 1'-3" FROM FACE OF POLE IS REQUIRED.
2. THE STEADY ARM ASSEMBLY SHALL BE CAPABLE OF ACCOMMODATING ALONG TRACK MOVEMENT. CONTRACTOR SHALL FURNISH ALTERNATE SUSPENSION DESIGN IF STANDARD STEADY ARM CANNOT BE USED DUE TO SPACE LIMITATIONS.
3. CONTRACTOR TO ENSURE THAT PANTOGRAPH CLEARANCE AND STEADY ARM CLEARANCE REQUIREMENTS .

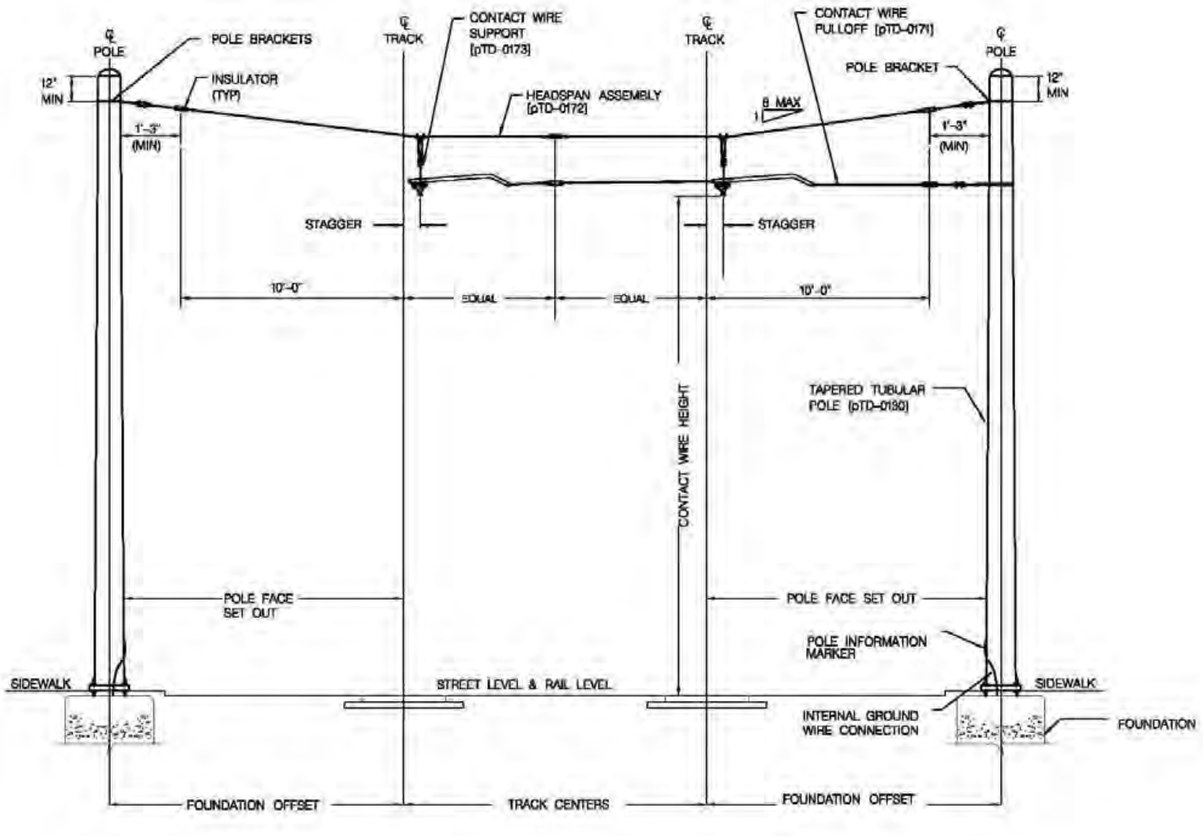

SUPPORTED PULL OFF STRUCTURE 1/-

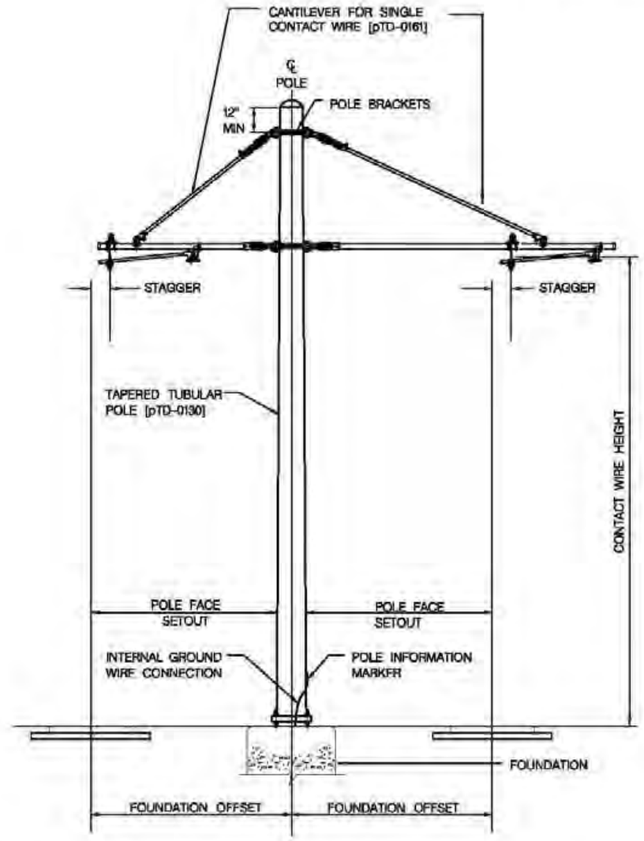

CENTER POLE STRUCTURE WITH BACK-TO-BACK CANTILEVER ASSEMBLIES 2/-

D.C. DEPARTMENT OF TRANSPORTATION

DATE	APPR.		RECOMMENDED: Muhammad Khalid DEPUTY CHIEF ENGINEER	STREETCAR STANDARD DRAWINGS
REVISED				
ISSUED:		REFERENCE	APPROVED: CHIEF TRANSPORTATION ENGINEER	OVERHEAD CONTACT SYSTEM TYPICAL CANTILEVER & SUPPORTED PULL OFF STRUCTURES AUTO-TENSIONED SINGLE CONTACT WIRE

PROJECT ENG.
DESIGNED BY
CHECKED BY
DRAWN BY
PROJECT MGR. CY

DIVISION CHIEF
DATE
FILE
DWG. NO. OCD-02

c:\pwworking\plit\d0537312\OCD-02.dgn
1/20/2012

NOTES:

1. THE STEADY SPAN WIRE SHALL BE TENSIONED TO ELIMINATE SAG DUE TO EQUIPMENT WEIGHT. NOMINAL PRE-TENSION IS 700 LB BEFORE INSTALLATION OF OCS.
2. SPAN WIRES SHALL BE ATTACHED TO THE POLE USING APPROVED BANDED OR WRAP AROUND BRACKETS. SEE DETAIL 2.

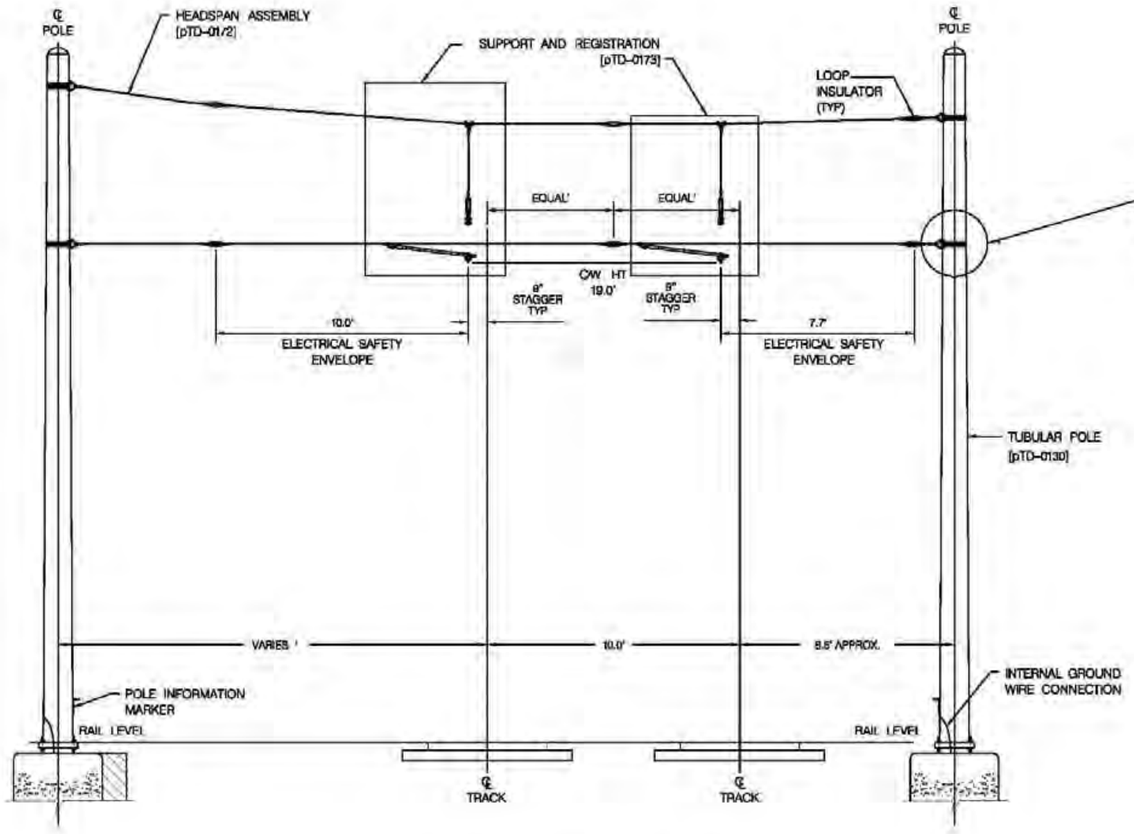

TYPICAL HEADSPAN STRUCTURE 1

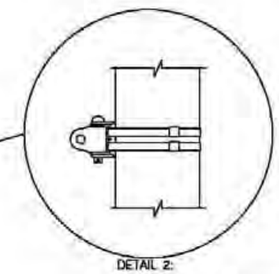

DETAIL 2:

POLE BAND AND BRACKETS FOR ATTACHMENT OF SPAN WIRES. SEE ASSEMBLY BH-XX OR WIRE WRAP AROUND ASSEMBLY BE-XX [pTD-0150]

			RECOMMENDED: Muhammad Khalil DEPUTY CHIEF ENGINEER	D.C. DEPARTMENT OF TRANSPORTATION
DATE	APPR.		APPROVED: CHIEF TRANSPORTATION ENGINEER	STREETCAR STANDARD DRAWINGS
REVISED				OVERHEAD CONTACT SYSTEM TYPICAL HEADSPAN STRUCTURE AUTO-TENSIONED SINGLE CONTACT WIRE
ISSUED:		REFERENCE		

PROJECT ENG.
DESIGNED BY
CHECKED BY
DRAWN BY
PROJECT MGR. CY
DIVISION CHIEF
DATE
FILE
DWG. NO. OCD-03

c:\pwworking\plit\d0537312\OCD-03.dgn
1/20/2012

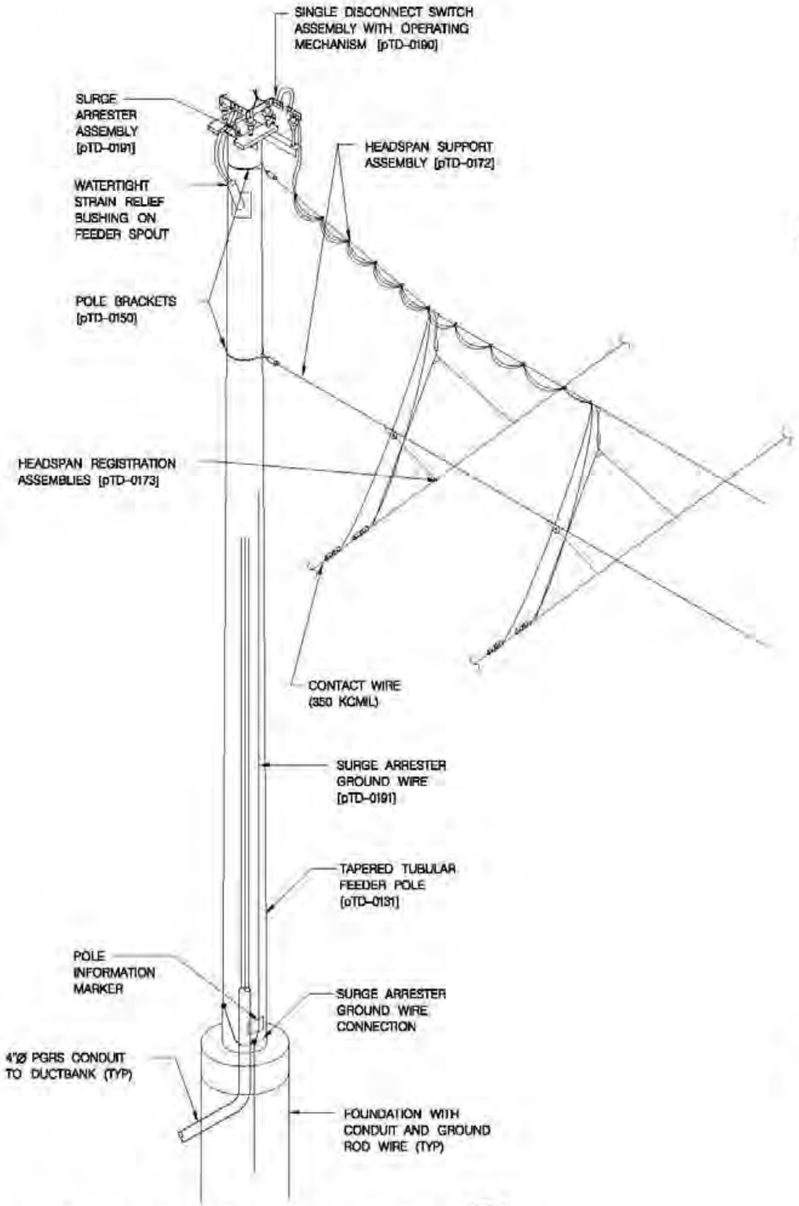

TWIN DISCONNECT ON HEADSPAN POLE (1)

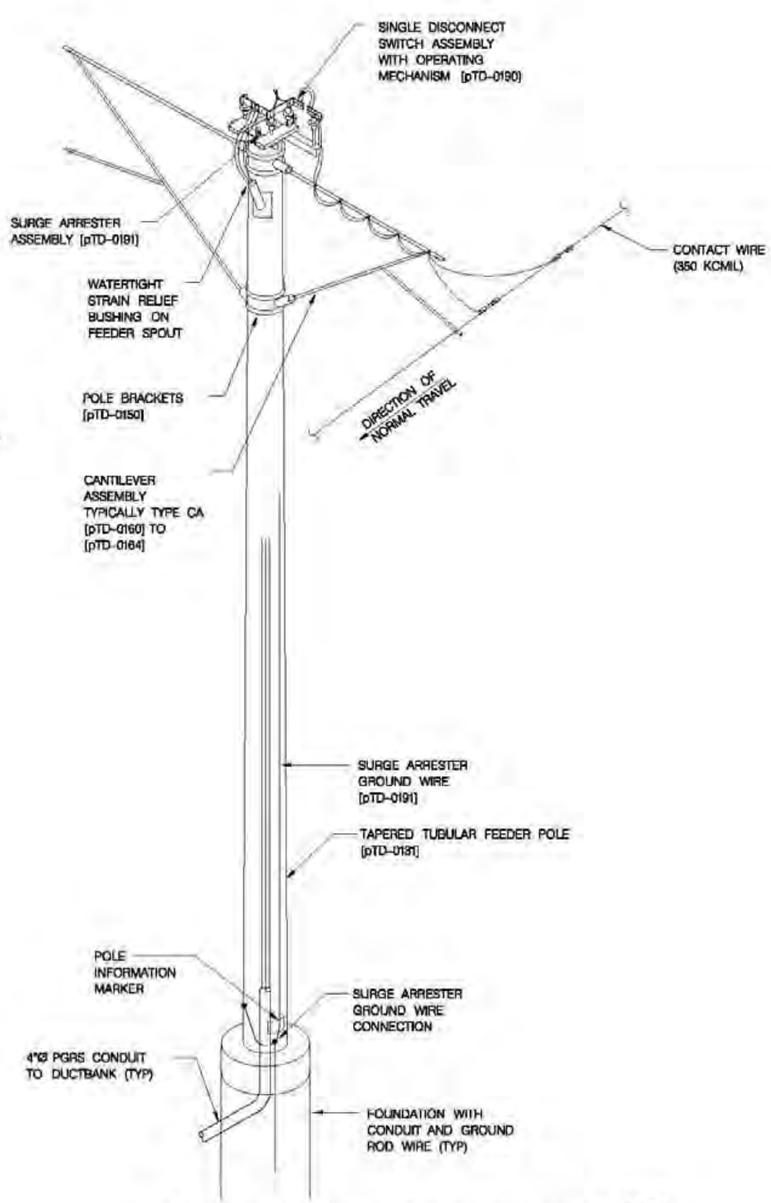

SINGLE DISCONNECT ON CENTER OR SIDE POLE (2)

NOTES:

1. TYPICAL ASSEMBLY DRAWINGS ARE NOTED THUS: [pTD-0040].
2. MOUNTING HEIGHT AND POSITION OF OPERATING HANDLE TO BE DETERMINED BY CONTRACTOR AND APPROVED BY THE DISTRICT.
3. ALL OPERATING HANDLES SHALL BE INSTALLED IN THE ALONG TRACK DIRECTION AND CLEAR VEHICLE CLEARANCE ENVELOPE.
4. ALL OPERATING HANDLES SHALL BE PROVIDED WITH A DISTRICT APPROVED PADLOCK AND KEY.
5. EACH INCOMING FEEDER CIRCUIT IS TO BE PROTECTED BY A SURGE ARRESTER ASSEMBLY CONNECTED TO THE SUPPLY SIDE OF EACH DISCONNECT SWITCH.
6. WHERE SWITCH MECHANISMS OR OTHER EQUIPMENT OBSTRUCT NORMAL PLACEMENT OF POLE I.D. LABELS FACING ON COMING TRAINS, THE LABELS ARE TO BE POSITIONED FACING THE TRACK.

D.C. DEPARTMENT OF TRANSPORTATION

DATE	APPR.	REFERENCE
REVISED		
ISSUED:		

RECOMMENDED: Mohammad Khalil
DEPUTY CHIEF ENGINEER

APPROVED:
CHIEF TRANSPORTATION ENGINEER

STREETCAR STANDARD DRAWINGS

OVERHEAD CONTACT SYSTEM
TYPICAL FEEDER STRUCTURES
WITH DISCONNECT SWITCH

PROJECT ENG.
DESIGNED BY
CHECKED BY
DRAWN BY
PROJECT MGR. CV
DIVISION CHIEF
DATE
FILE
DWG. NO OCD-04

c:\pwworking\pitt\d0637312\OCD-04.dgn
1/20/2012

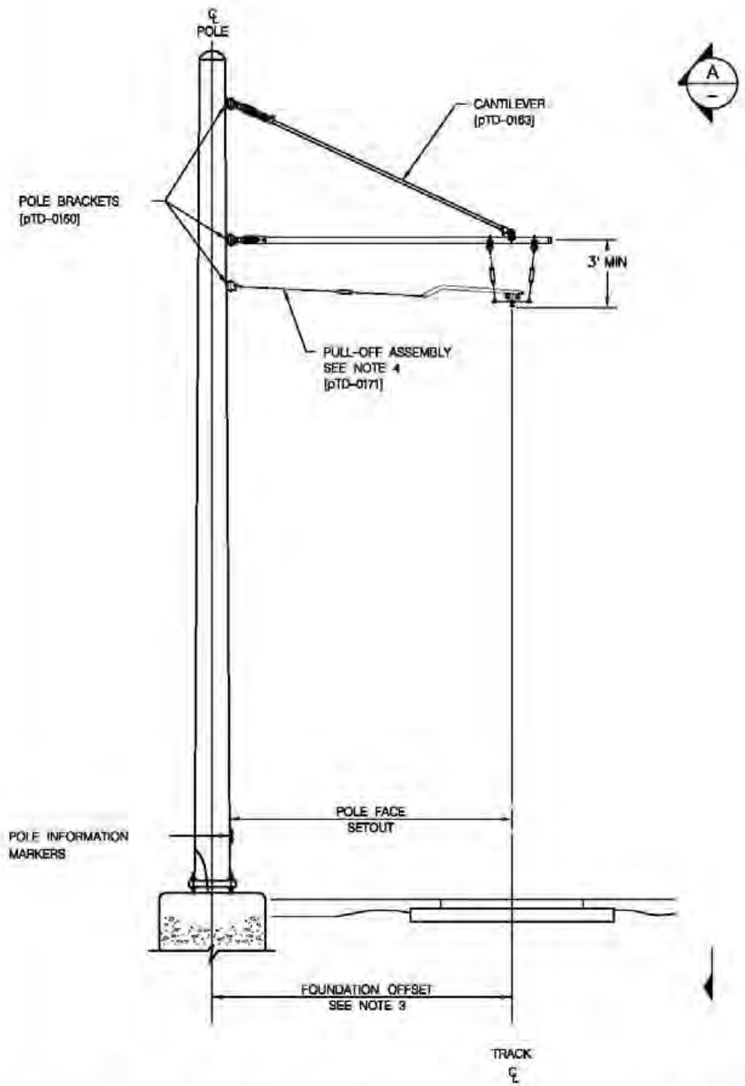

TYPICAL SECTION INSULATOR SUSPENSION STRUCTURES 1/—

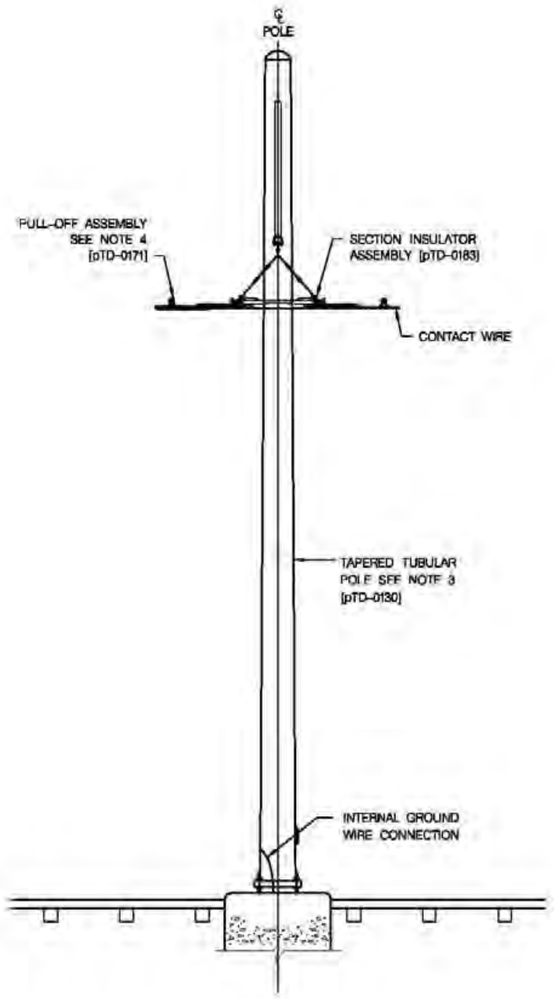

SECTION A/—

NOTE:

1. PULL-OFF ASSEMBLY ARE REQUIRED IF RADIAL LOADS ARE PRESENT ACTING ON THE SECTION INSULATOR.

			RECOMMENDED: Mohammad Khalil / DEPUTY CHIEF ENGINEER	D.C. DEPARTMENT OF TRANSPORTATION
DATE	APPR.			STREETCAR STANDARD DRAWINGS
REVISED			APPROVED: R. Thomas / CHIEF TRANSPORTATION ENGINEER	OVERHEAD CONTACT SYSTEM TYPICAL SECTION INSULATOR SUSPENSION STRUCTURE AUTO-TENSIONED SINGLE CONTACT WIRE
ISSUED:		REFERENCE		

PROJECT ENG.
DESIGNED BY
CHECKED BY
DRAWN BY CY
PROJECT MGR.
DIVISION CHIEF
DATE
FILE
DWG. NO. OCD-05

c:\pwworking\pitt\d0537315\OCD-05.dgn
12/9/2012

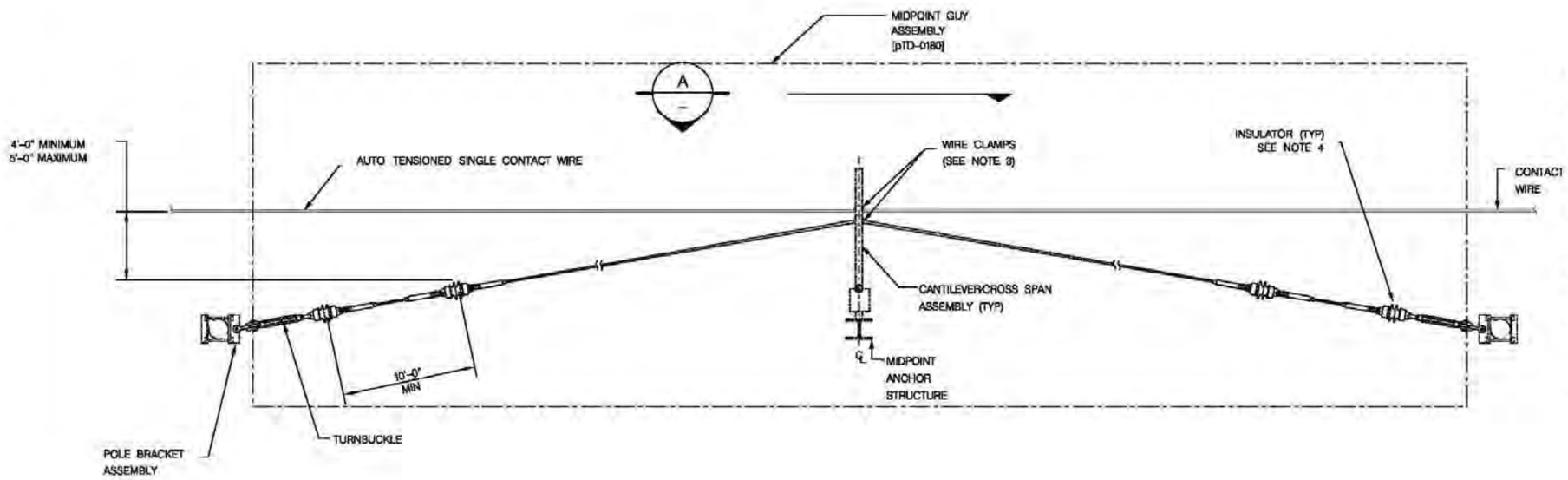

TYPICAL MIDPOINT GUY SPANS– SINGLE CONTACT WIRE (1)

NOTES:

1. ALL MIDPOINT SPAN GUY WIRES SHALL RESTRAIN CONTACT WIRE ON EITHER SIDE UNDER BROKEN WIRES CONDITION.
2. MIDPOINT SPAN GUY WIRE TO BE STAINLESS STEEL STRAND OR HD COPPER STRAND CAPABLE OF HOLDING THE COMBINED CATENARY SYSTEM WHEN AT HIGHEST TENSIONS SHOWN ON OCT-11.
3. CONTACT WIRE RESTRAINT TO BE HD COPPER STRAND CAPABLE OF HOLDING CONTACT WIRE WHEN AT THE HIGHEST TENSIONS SHOWN ON OCT-11.
4. TERMINATION INSULATORS SHALL BE LOCATED SO THEY PREVENT CLASHING WITH ADJACENT INSULATORS AT ALL TIEMS.
5. FOR SITE SPECIFIC VALUES OF SPAN LENGTHS, WIRE HEIGHTS, STAGGER VALUE & DIRECTION AND TERMINATION HEIGHTS SEE WIRING LAYOUT PLANS.
6. THE TEMPERATURE RANGE SHOWN IS THE ANTICIPATED PRACTICAL RANGE FOR PERFORMING TENSIONING WORK.

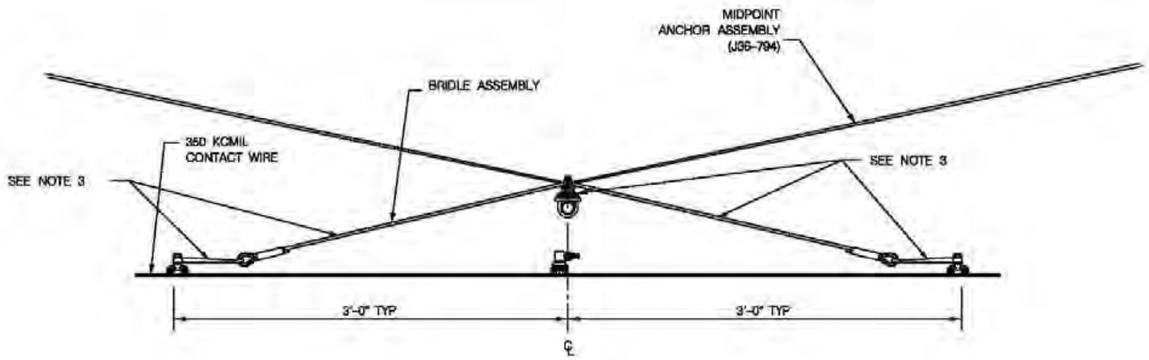

SECTION (A)

			RECOMMENDED: Mohammed Khalid, DEPUTY CHIEF ENGINEER	D.C. DEPARTMENT OF TRANSPORTATION
DATE	APPR.		APPROVED: CHIEF TRANSPORTATION ENGINEER	STREETCAR STANDARD DRAWINGS
REVISED				OVERHEAD CONTACT SYSTEM GENERAL ARRANGEMENT MIDPOINT ANCHORS
ISSUED:		REFERENCE		

PROJECT ENG.
DESIGNED BY
CHECKED BY
DRAWN BY
PROJECT MGR. CV
DIVISION CHIEF
DATE
FILE
DWG. NO. OCD-08

c:\pwworking\pitt\d0637312\OCD-06.dgn
1/20/2012

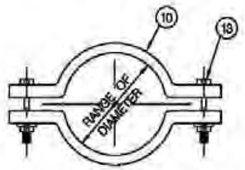

PLAN
ROUND BAR OPTION

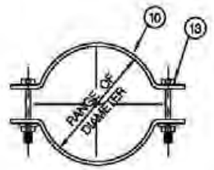

PLAN
PLATE OPTION

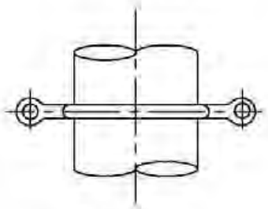

ELEVATION
ROUND BAR OPTION

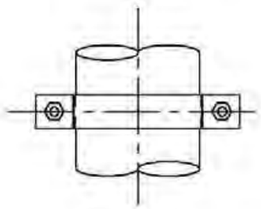

ELEVATION
PLATE OPTION

TWO PIECE POLE BRACKET (1)
ASSEMBLY BA-XX

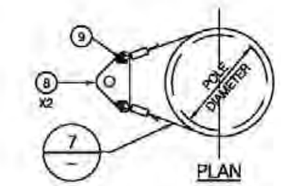

PLAN

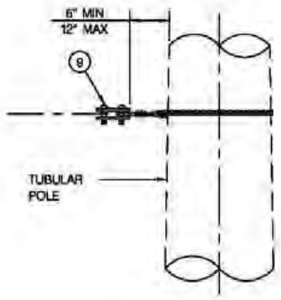

ELEVATION

STEEL GUY STRAND
FOR CROSS-SPANS AND TERMINATIONS (2)
ASSEMBLY BE-XX

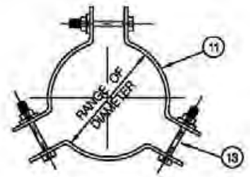

THREE PIECE POLE
BRACKETS FOR GUY WIRES (3)
ASSEMBLY BC-XX

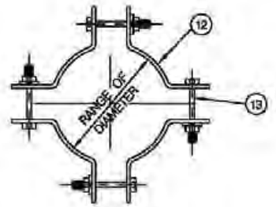

PLAN

FOUR PIECE POLE
BRACKETS FOR GUY ATTACHMENT (4)
ASSEMBLY BD-XX

NOTES:

1. ALL DIMENSIONS AND BOLT SIZES SHALL BE DETERMINED BY CONTRACTOR BASED ON FURNISHED CATENARY COMPONENTS PRIOR TO FABRICATION.
2. CONTRACTOR TO DETERMINE POLE DIAMETER AT ATTACHMENT HEIGHT PRIOR TO FABRICATION OF BRACKET ASSEMBLIES.
3. IN ASSEMBLY REFERENCE, "XX" INDICATES POLE DIAMETER TO THE NEAREST INCH.
4. BOLT THREAD PROJECTION THROUGH NUTS SHALL NOT EXCEED 2 INCHES IN LENGTH.
5. SWIVEL SHALL BE DESIGNED BY THE CONTRACTOR TO SUIT MATING CANTILEVER ASSEMBLY COMPONENTS.
6. THE BILL OF MATERIALS DETAILS ARE TYPICAL FOR THE ASSEMBLY STYLES SHOWN. THE CONTRACTOR SHALL ITEMIZE THE TABLE WITH DESCRIPTIONS AND PART NUMBERS OF COMPONENTS REQUIRED TO COMPLETE EACH ASSEMBLY.

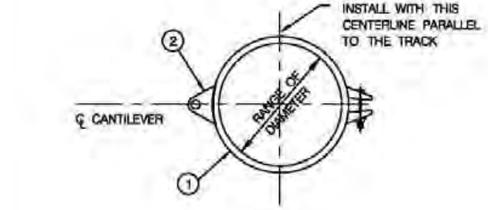

PLAN

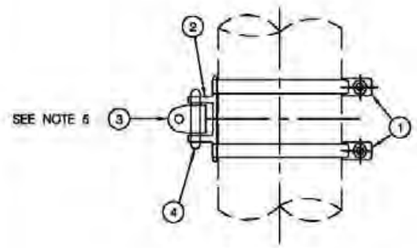

ELEVATION

HINGE BRACKET FOR A SINGLE CANTILEVER (5)
ASSEMBLY BH-XX

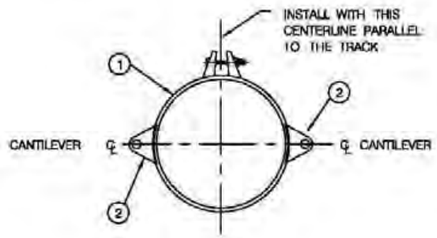

PLAN

HINGE BRACKET FOR BACK-TO-BACK CANTILEVER (6)
ASSEMBLY BB-XX

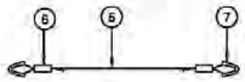

QUANTITIES EACH TYPE								
–	–	4	3	–	2	BOLT, GALVANIZED	13	WNUT & WASHER
–	–	4	–	–	–	QUARTER BRACKET	12	
–	–	–	3	–	–	THIRD BRACKET	11	
–	–	–	–	–	2	HALF BRACKET	10	
–	3	–	–	–	–	PIN, WITH SLIT PIN	9	
–	2	–	–	–	–	PLATE, 3 PIN	8	
–	2	–	–	–	–	THIMBLE	7	STAINLESS STEEL
–	2	–	–	–	–	COMPRESSION SLEEVE	6	
–	AS REQD	–	–	–	–	WIRE ROPE	5	STAINLESS STEEL
1	–	–	–	2	–	HINGE PIN	4	
1	–	–	–	2	–	SWIVEL	3	
1	–	–	–	2	–	POLE CLEVIS	2	
2	–	–	–	2	–	POLE CLAMP ASSY	1	
BH-XX	BE-XX	BD-XX	BC-XX	BB-XX	BA-XX	DESCRIPTION	ITEM NO.	PART NO./REMARKS
ASSEMBLY TYPE								

BILL OF MATERIALS

TYPICAL POLE SLING SUB-ASSEMBLY (7)

			RECOMMENDED: Mohammad Khalil — DEPUTY CHIEF ENGINEER
DATE	APPR.		APPROVED: — CHIEF TRANSPORTATION ENGINEER
REVISED			
ISSUED:		REFERENCE	

D.C. DEPARTMENT OF TRANSPORTATION

STREETCAR STANDARD DRAWINGS

OVERHEAD CONTACT SYSTEM
BRACKET ASSEMBLIES FOR TUBULAR POLES
TYPES BA, BB, BC, BD, BE AND BH

PROJECT ENG.
DESIGNED BY
CHECKED BY
DRAWN BY
PROJECT MGR. CV

DIVISION CHIEF
DATE
FILE
DWG. NO. CCD-67

c:\powerking\pltt\d0537315\CCD-07.dgn
1/20/2012

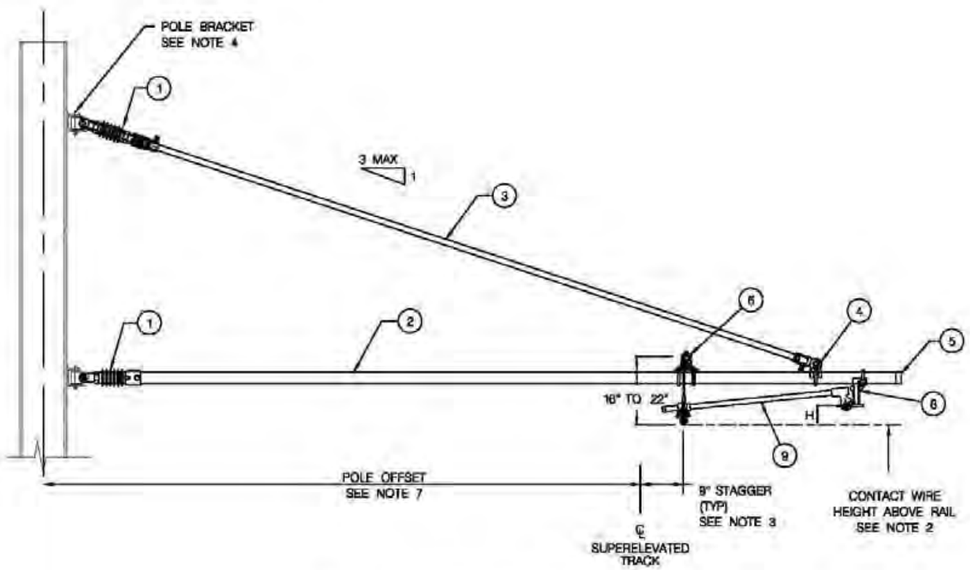

CA-01L/M CANTILEVER LIGHT LOAD (1/–)
RADIAL LOAD < 500 LB

NOTES:

1. POLE BRACKET ASSEMBLY CALLED OFF SEPARATELY.
2. CONTRACTOR SHALL DETERMINE COMPONENT DETAILS AND LOADING LIMITS.
3. CONTRACTOR SHALL FIELD VERIFY POLE OFFSET DIMENSIONS PRIOR TO FABRICATION OF CANTILEVER.
4. THE BILL OF MATERIALS DETAILS ARE TYPICAL FOR THE ASSEMBLY STYLES SHOWN. THE CONTRACTOR SHALL ITEMIZE THE TABLE WITH DESCRIPTIONS AND PART NUMBERS OF COMPONENTS REQUIRED TO COMPLETE EACH ASSEMBLY.

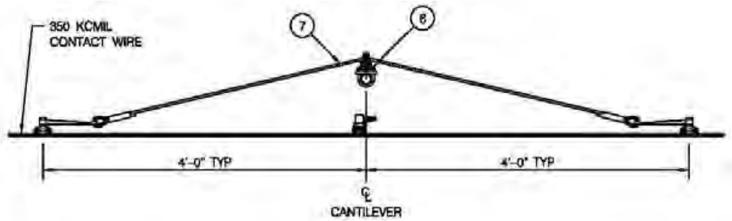

SECTION (A/–)
SCALE: NTS

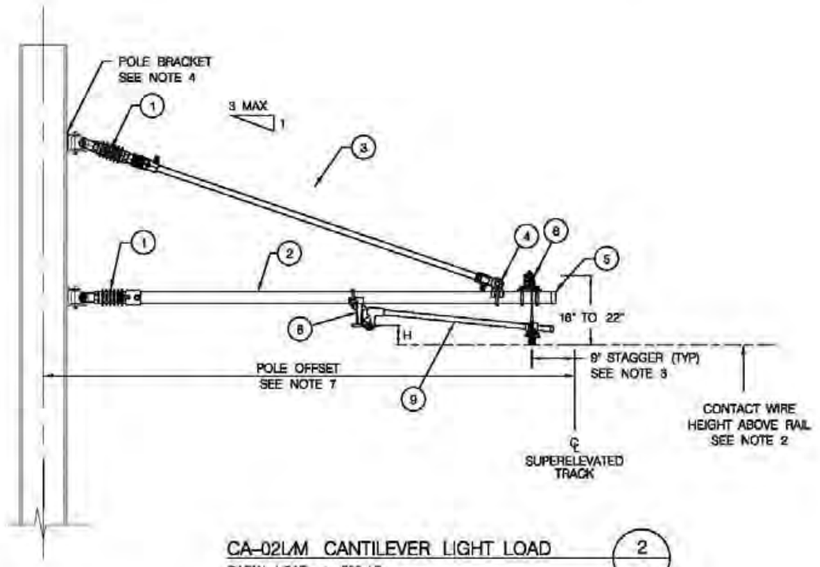

CA-02L/M CANTILEVER LIGHT LOAD (2/–)
RADIAL LOAD < 500 LB

QUANTITIES EACH TYPE				
1	1	STEADY ARM ASSEMBLY	9	
1	1	DROP BRACKET	8	
1	1	SUPPORT BRIDLE SUB ASSEMBLY	7	
1	1	SINGLE CW SUSPENSION	6	
1	1	SYNTHETIC CAP FOR 2" PIPE	5	
1	1	EYE CLAMP	4	
1	1	PIPE 1" SCHEDULE 40 GALV. W/END FITTING	3	
1	1	PIPE 2' SCHEDULE 80 GALV.	2	
2	2	CANTILEVER INSULATOR	1	
CA-02L	CA-01L		ITEM	PART NO./
ASSEMBLY TYPE		DESCRIPTION	NO.	REMARKS
BILL OF MATERIALS				

D.C. DEPARTMENT OF TRANSPORTATION

DATE	APPR.		RECOMMENDED: Mohammed Khalid DEPUTY CHIEF ENGINEER	STREETCAR STANDARD DRAWINGS
REVISED				PROJECT ENG. / DESIGNED BY / CHECKED BY / DRAWN BY / PROJECT MGR. CY
ISSUED:		REFERENCE	APPROVED: CHIEF TRANSPORTATION ENGINEER	OVERHEAD CONTACT SYSTEM SINGLE CONTACT WIRE LIGHT/MEDIUM LOAD PUSH-OFF AND PULL-OFF CANTILEVER ASSEMBLIES CA-01L/M & CA-02L/M
				DIVISION CHIEF / DATE / FILE / DWG. NO. OCD-08

c:\pwworking\plit\d0537312\OCD-08.dgn
1/20/2012

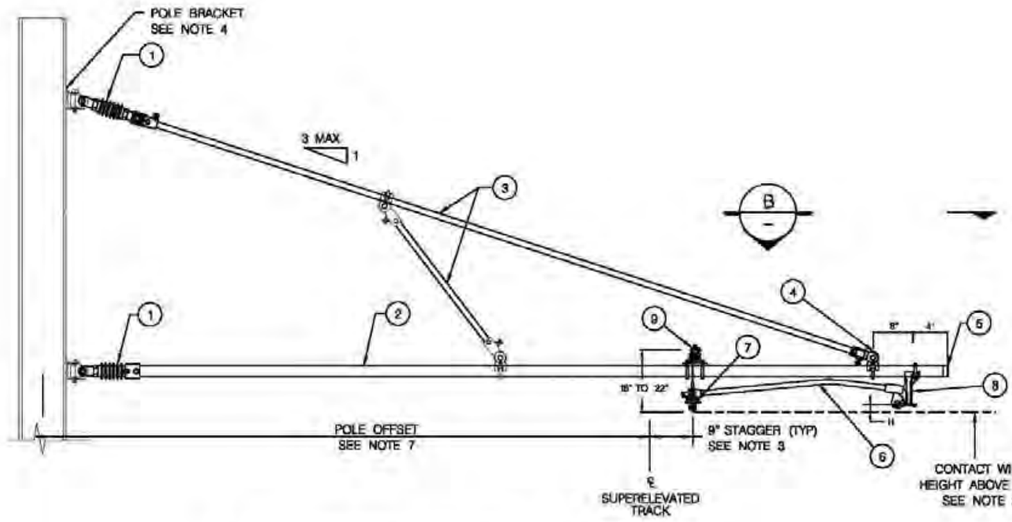

CA-01H CANTILEVER HEAVY LOAD (1/–)
MAX RADIAL LOAD FROM 500 TO 1000 LBS

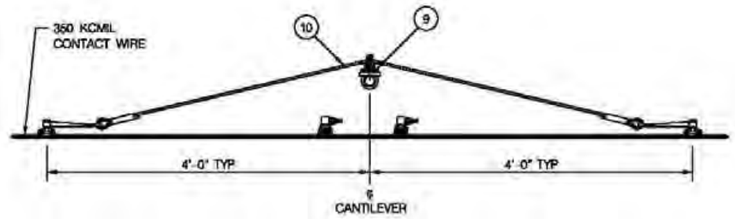

SECTION (A/–)
SCALE: NTS

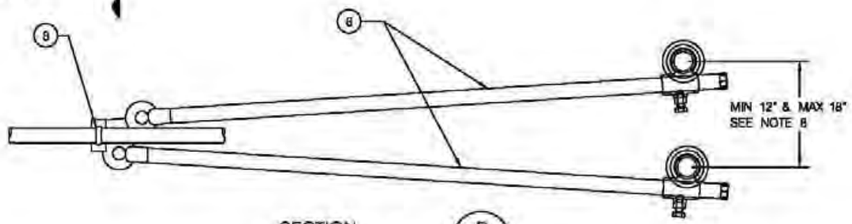

SECTION (B/–)
DOUBLE STEADY ARM

NOTES:

1. FOR STEADY ARM SHAPE, ALIGNMENT AND CLEARANCE CRITERIA SEE DRAWINGS pTD-0051.
2. POLE BRACKET ASSEMBLY CALLED OFF SEPARATELY.
3. CONTRACTOR SHALL DETERMINE COMPONENT DETAILS AND LOADING LIMITS.
4. CONTRACTOR SHALL FIELD VERIFY POLE OFFSET DIMENSION PRIOR TO FABRICATION OF CANTILEVER.
5. THE CONTRACT SHALL ENSURE THAT EACH STEADY ARM EQUALLY SHARES THE CW RADIAL LOAD.
6. THE BILL OF MATERIALS DETAILS ARE TYPICAL FOR THE ASSEMBLY STYLES SHOWN. THE CONTRACTOR SHALL ITEMIZE THE TABLE WITH DESCRIPTIONS AND PART NUMBERS OF COMPONENTS REQUIRED TO COMPLETE EACH ASSEMBLY.

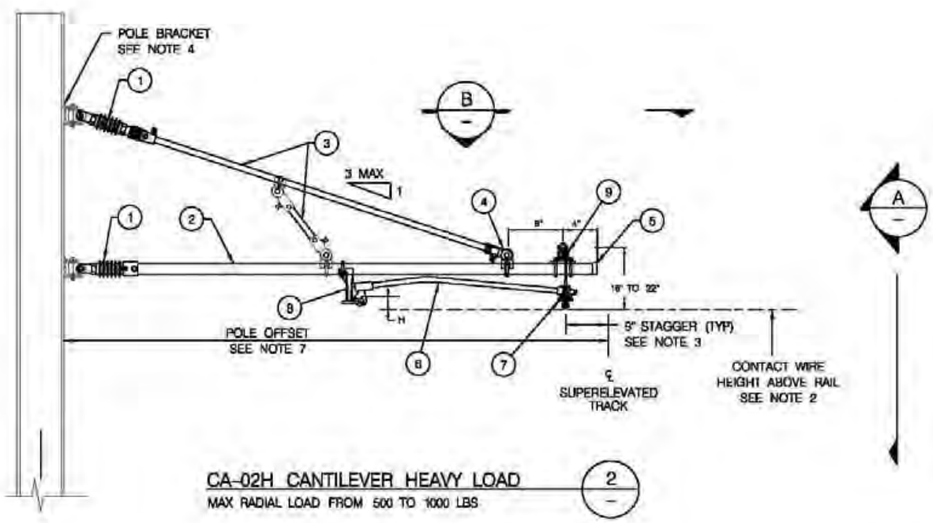

CA-02H CANTILEVER HEAVY LOAD (2/–)
MAX RADIAL LOAD FROM 500 TO 1000 LBS

QUANTITIES EACH TYPE				
1	1	SUPPORT BRIDLE SUB ASSEMBLY	10	
1	1	SINGLE CONTACT WIRE SUSPENSION	9	
1	1	DROP BRACKET	8	
2	2	CW SWIVEL CLAMP & INSULATOR	7	
2	2	STEADY ARM	6	
1	1	SYNTHETIC CAP FOR 2" PIPE	5	
3	3	EYE CLAMP	4	
2	2	PIPE 1" SCHEDULE 40 GALV. W/END FITTING	3	
1	1	PIPE 2" SCHEDULE 80 GALV.	2	
2	2	CANTILEVER INSULATOR	1	
CA-02H	CA-01H		ITEM	PART NO./
ASSEMBLY TYPE		DESCRIPTION	NO.	REMARKS
BILL OF MATERIALS				

D.C. DEPARTMENT OF TRANSPORTATION

DATE	APPR.	
REVISED		
ISSUED:		REFERENCE

RECOMMENDED: Mohamed Khalid
DEPUTY CHIEF ENGINEER

APPROVED:
CHIEF TRANSPORTATION ENGINEER

STREETCAR STANDARD DRAWINGS

OVERHEAD CONTACT SYSTEM
SINGLE CONTACT WIRE HEAVY LOAD
PUSH-OFF AND PULL-OFF CANTILEVER ASSEMBILES
CA-01H & CA-02H

PROJECT ENG.
DESIGNED BY
CHECKED BY
DRAWN BY
PROJECT MGR. CY
DIVISION CHIEF
DATE
FILE
DWG. NO. OCD-09

c:\pwworking\plit\d0537312\OCD-09.dgn
1/20/2012

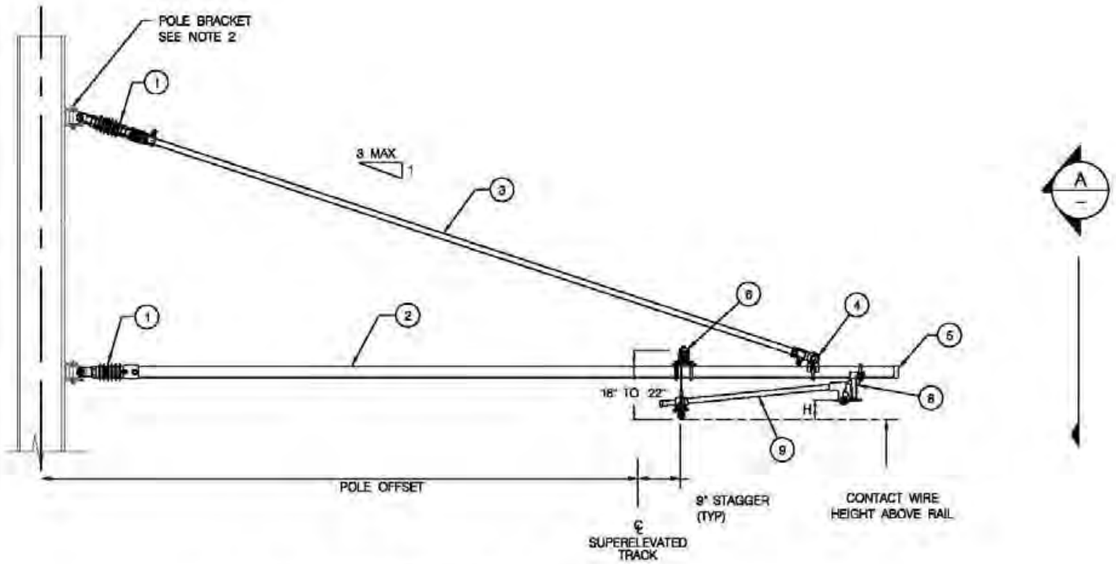

CA-01L/M CANTILEVER LIGHT LOAD (1/–)
RADIAL LOAD < 500 LB

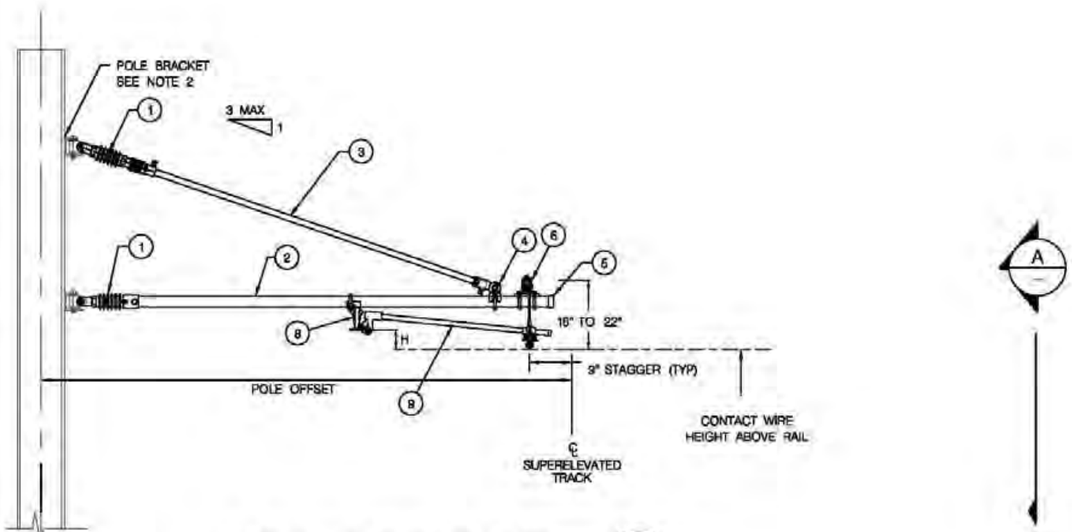

CA-02L/M CANTILEVER LIGHT LOAD (2/–)
RADIAL LOAD < 500 LB

NOTES:

1. SUPPORT BRIDEL SUB-ASSEMBLY SHALL BE FIELD ADJUSTED TO ACHIEVE SPECIFIED CONTACT WIRE HEIGHT.
2. FOR CONTACT WIRE HEIGHT OVER EACH TRACK, SEE OCS LAYOUT PLAN.
3. FOR REQUIRED STAGGER VALUES AND DIRECTION, SEE OCS LAYOUT PLAN.
4. POLE BRACKET ASSEMBLY CALLED OFF SEPARATELY.
5. CONTRACTOR SHALL DETERMINE COMPONENT DETAILS AND LOADING LIMITS.
6. OCS DETAILS AT EACH LOCATION ARE SHOWN IN THE WIRING LAYOUT PLANS.
7. CONTRACTOR SHALL FIELD VERIFY POLE OFFSET DIMENSIONS PRIOR TO FABRICATION OF CANTILEVER.
8. THE BILL OF MATERIALS DETAILS ARE TYPICAL FOR THE ASSEMBLY STYLES SHOWN. THE CONTRACTOR SHALL ITEMIZE THE TABLE WITH DESCRIPTIONS AND PART NUMBERS OF COMPONENTS REQUIRED TO COMPLETE EACH ASSEMBLY.

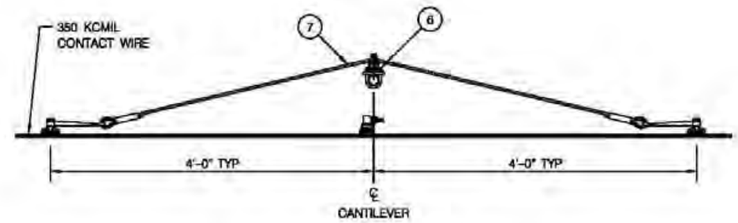

SECTION (A/–)
SCALE: NTS

QUANTITIES EACH TYPE				
1	1	STEADY ARM ASSEMBLY	9	
1	1	DROP BRACKET	8	
1	1	SUPPORT BRIDLE SUB ASSEMBLY	7	
1	1	SINGLE CW SUSPENSION	6	
1	1	SYNTHETIC CAP FOR 2" PIPE	5	
1	1	EYE CLAMP	4	
1	1	PIPE 1" SCHEDULE 40 GALV. W/END FITTING	3	
1	1	PIPE 2" SCHEDULE 80 GALV.	2	
2	2	CANTILEVER INSULATOR	1	
CA-02L	CA-01L		ITEM	PART NO./
ASSEMBLY TYPE		DESCRIPTION	NO.	REMARKS
BILL OF MATERIALS				

D.C. DEPARTMENT OF TRANSPORTATION

DATE	APPR.	RECOMMENDED: Mohammed Khalid, DEPUTY CHIEF ENGINEER	STREETCAR STANDARD DRAWINGS
REVISED			PROJECT ENG. / DESIGNED BY / CHECKED BY / DRAWN BY / PROJECT MGR. CY
ISSUED:		APPROVED: CHIEF TRANSPORTATION ENGINEER	OVERHEAD CONTACT SYSTEM SINGLE CONTACT WIRE LIGHT/MEDIUM LOAD PUSH-OFF AND PULL-OFF CANTILEVER ASSEMBLIES CA-01L/M & CA-02L/M
	REFERENCE		DIVISION CHIEF / DATE / FILE / DWG. NO. OCD-10

c:\pwworking\plit\d0537312\OCD-10.dgn
1/20/2012

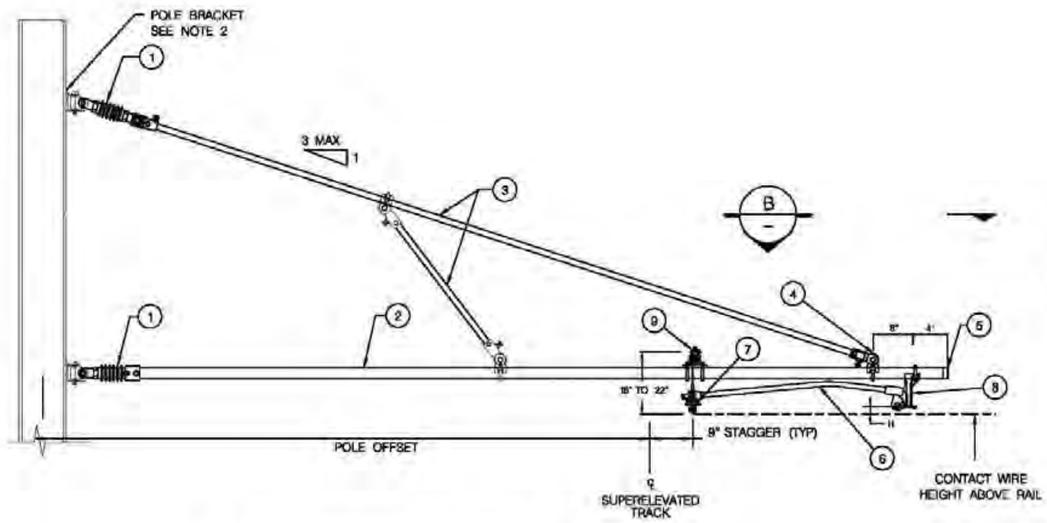

CA-01H CANTILEVER HEAVY LOAD (1)

MAX RADIAL LOAD FROM 500 TO 1000 LBS

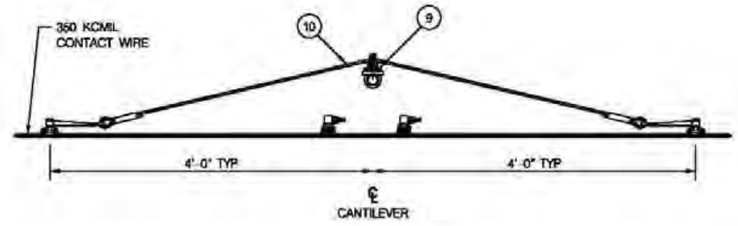

SECTION A

SCALE: NTS

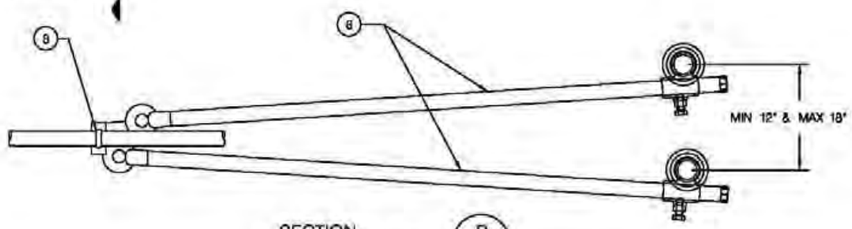

SECTION B

DOUBLE STEADY ARM

NOTES:

1. FOR STEADY ARM SHAPE, ALIGNMENT AND CLEARANCE CRITERIA SEE DRAWINGS pTD-0051.
2. POLE BRACKET ASSEMBLY CALLED OFF SEPARATELY.
3. CONTRACTOR SHALL DETERMINE COMPONENT DETAILS AND LOADING LIMITS.
4. CONTRACTOR SHALL FIELD VERIFY POLE OFFSET DIMENSION PRIOR TO FABRICATION OF CANTILEVER.
5. THE CONTRACT SHALL ENSURE THAT EACH STEADY ARM EQUALLY SHARES THE CW RADIAL LOAD.
6. THE BILL OF MATERIALS DETAILS ARE TYPICAL FOR THE ASSEMBLY STYLES SHOWN. THE CONTRACTOR SHALL ITEMIZE THE TABLE WITH DESCRIPTIONS AND PART NUMBERS OF COMPONENTS REQUIRED TO COMPLETE EACH ASSEMBLY.

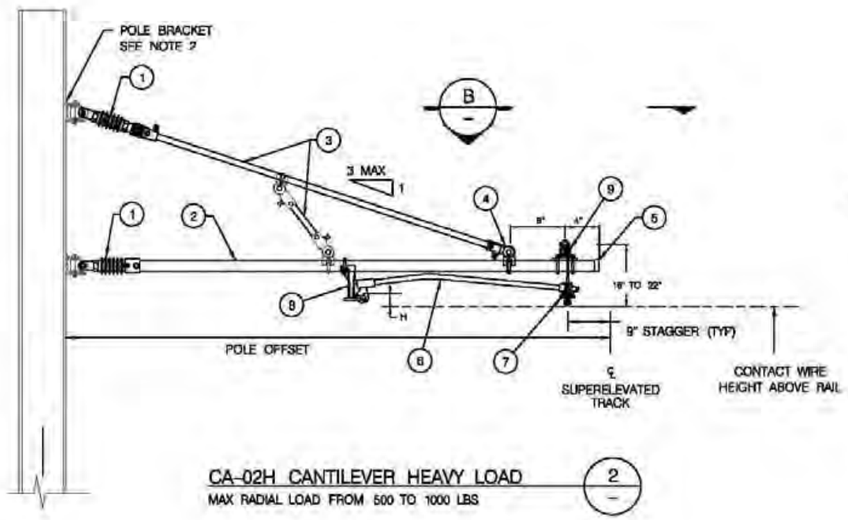

CA-02H CANTILEVER HEAVY LOAD (2)

MAX RADIAL LOAD FROM 500 TO 1000 LBS

QUANTITIES EACH TYPE				
1	1	SUPPORT BRIDLE SUB ASSEMBLY	10	
1	1	SINGLE CONTACT WIRE SUSPENSION	9	
1	1	DROP BRACKET	8	
2	2	CW SWIVEL CLAMP & INSULATOR	7	
2	2	STEADY ARM	6	
1	1	SYNTHETIC CAP FOR 2" PIPE	5	
3	3	EYE CLAMP	4	
2	2	PIPE 1" SCHEDULE 40 GALV. W/END FITTING	3	
1	1	PIPE 2" SCHEDULE 80 GALV.	2	
2	2	CANTILEVER INSULATOR	1	
CA-02H	CA-01H	DESCRIPTION	ITEM NO.	PART NO./ REMARKS
ASSEMBLY TYPE				

BILL OF MATERIALS

D.C. DEPARTMENT OF TRANSPORTATION

DATE	APPR.		
REVISED			
ISSUED:			REFERENCE

RECOMMENDED: Mohammad Khalil
DEPUTY CHIEF ENGINEER

APPROVED:
CHIEF TRANSPORTATION ENGINEER

STREETCAR STANDARD DRAWINGS

OVERHEAD CONTACT SYSTEM
SINGLE CONTACT WIRE HEAVY LOAD
PUSH-OFF AND PULL-OFF CANTILEVER ASSEMBLIES
CA-01H & CA-02H

PROJECT ENG.
DESIGNED BY
CHECKED BY
DRAWN BY
PROJECT MGR. CY
DIVISION CHIEF
DATE
FILE
DWG. NO. OCD-11

c:\pwworking\pitt\d0537315\OCD-11.dgn
12/9/2012

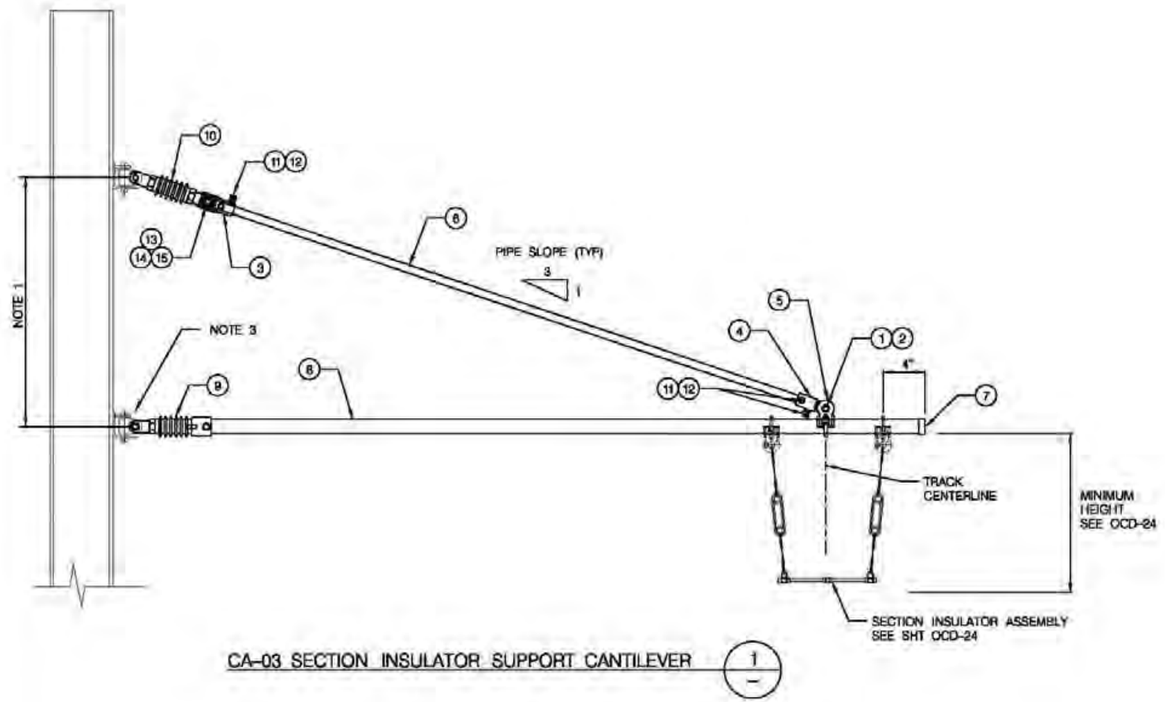

CA-03 SECTION INSULATOR SUPPORT CANTILEVER 1/–

NOTES:

1. CANTILEVER BRACKET SEPARATION SHALL BE DETERMINED USING THE TYPICAL 1:3 PIPE SLOPE AS A BASIS. IN SOME LOCATIONS A LARGER SLOPE MAY BE USED TO AVOID CONFLICTS WITH OTHER HARDWARE MOUNTED ON THE POLE.
2. CANTILEVER SWIVEL & CLEVIS IS ALLOCATED WITH THE BRACKET ASSEMBLIES.
3. THE BILL OF MATERIAL DETAILS ARE TYPICAL FOR THE ASSEMBLY STYLES SHOW. THE CONTRACTOR SHALL ITEMIZE THE TABLE WITH DESCRIPTIONS AND PART NUMBERS OF COMPONENTS REQUIRED TO COMPLETE EACH ASSEMBLY.
4. THE CONTRACTOR SHALL DETERMINE THE LOADING LIMTS.

QUANTITIES EACH TYPE				
	2	3/4" WASHER- HDG – SMALL PATTERN	15	
	1	3/4" HEX NUT HDG	14	
	1	3/4" X 2-1/2" HEX BOLT, HDG	13	
	4	1/2" X 1-1/4" SS SET SCREW (CUP POINT)	12	
	4	1/2" HEX NUT SS	11	
	1	TROLLEY SUPPORT TUBE INSULATION FOR 1" PIPE	10	
	1	REGISTRATION INSULATION FOR 2" PIPE	9	
	AS REQ'D	PIPE 2" SCHEDULE 80 ASTM A 106 B GALVANIZED	8	
	1	SYNTHETIC CAP FOR TUBE 2" PVC SOFT BLACK	7	
	AS REQ'D	PIPE 1" SCHEDULE 40 ASTM A 106 B GALVANIZED	6	
	1	EYE CLAMP FOR 2" PIPE WITH U BOLT, NUTS & WASHERS	5	
	1	CLEVIS END FITTING 32 (1")	4	
	1	SPADE END FITTING 32 (1")	3	
	1	SPLIT PIN 5X28 CU	2	
	1	PIN WITH ROUND HEAD 19X52 (DIN 43161)	1	
	CA-03		ITEM	PART NO./
ASSEMBLY TYPE		DESCRIPTION	NO.	REMARKS

BILL OF MATERIALS

D.C. DEPARTMENT OF TRANSPORTATION

DATE	APPR.	
REVISED		
ISSUED:		REFERENCE

RECOMMENDED: Mohammed Khalid
DEPUTY CHIEF ENGINEER

APPROVED: [signature]
CHIEF TRANSPORTATION ENGINEER

STREETCAR STANDARD DRAWINGS

OVERHEAD CONTACT SYSTEM
SINGLE CONTACT WIRE SECTION INSULATOR
SUPPORT CANTILEVER ASSEMBLY – CA-03

PROJECT ENG.
DESIGNED BY
CHECKED BY
DRAWN BY
PROJECT MGR. CV

DIVISION CHIEF
DATE
FILE
DWG. NO. OCD-12

c:\pwworking\plit\d0537312\OCD-12.dgn
1/20/2012

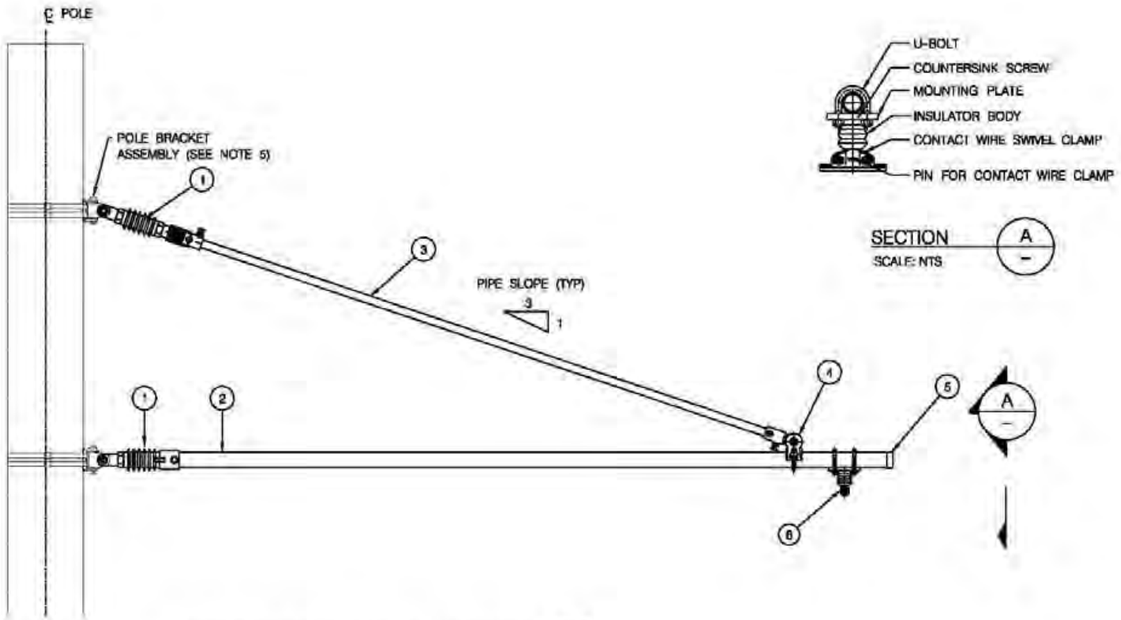

CA-04 OUT-OF-RUNNING CANTILEVER 1
MAX RADIAL LOAD OF 650 LBS.

NOTES:

1. THE CANTILEVER REACH IS EQUAL TO THE DISTANCE BETWEEN THE FACE OF THE POLE AND THE ELEVATED CENTERLINE OF THE TRACK AT CONTACT WIRE HEIGHT LEVEL PLUS THE STAGGER IF AWAY FROM POLE, MINUS THE STAGGER IF TOWARD THE POLE.
2. MAINTAIN MINIMUM 4" CLEARANCE FROM CANTILEVER PIPE TO DYNAMIC PANTOGRAPH CLEARANCE ENVELOPE.
3. POLE BRACKET ASSEMBLIES CALLED OFF SEPARATLEY FOR EACH TYPE OF POLE.
4. CONTRACTOR TO FIELD VERIFY POLE OFFSET DIMENSION PRIOR TO FABRICATION OF CANTILEVER PIPES.
5. MAINTAIN MINIMUM 1" CLEARANCE FROM SPAN WIRE BRACKET TO DYNAMIC PANTOGRAPH CLEARANCE ENVELOPE.
6. THE BILL OF MATERIALS DETAILS ARE TYPICAL FOR THE ASSEMBLY STYLES SHOWN. THE CONTRACTOR SHALL ITEMIZE THE TABLE WITH DESCRIPTIONS AND PART NUMBERS OF COMPONENTS REQUIRED TO COMPLETE EACH ASSEMBLY.
7. WHERE THE WORKING LOAD CAPABILITIES OF THE CONTRACTORS ASSEMBLIES EXCEED THOSE SHOWN IN THE LOADING TABLE, THE CONTRACTOR SHALL UPDATE THE TABLE.

QUANTITIES EACH TYPE				
	1	SINGLE CONTACT WIRE SUSPENSION	6	
	1	SYNTHETIC CAP FOR 2" PIPE	5	
	1	EYE CLAMP	4	
	1	PIPE 1" SCHEDULE 40 GALV. W/END FITTING	3	
	1	PIPE 2" SCHEDULE 80 GALV.	2	
	2	CANTILEVER INSULATOR	1	
	CA-04		ITEM	PART NO./
ASSEMBLY TYPE		DESCRIPTION	NO.	REMARKS
BILL OF MATERIALS				

D.C. DEPARTMENT OF TRANSPORTATION

DATE	APPR.		RECOMMENDED: Muhammed Khalid DEPUTY CHIEF ENGINEER	STREETCAR STANDARD DRAWINGS
REVISED				PROJECT ENG. / DESIGNED BY / CHECKED BY / DRAWN BY / PROJECT MGR. CY
ISSUED:		REFERENCE	APPROVED: CHIEF TRANSPORTATION ENGINEER	OVERHEAD CONTACT SYSTEM SINGLE CONTACT WIRE OUT-OF-RUNNING CANTILEVER ASSEMBLY - CA-04
				DIVISION CHIEF / DATE / FILE / DWG. NO. OCD 15

c:\pwworking\plit\d0537312\OCD-13.cgn
1/20/2012

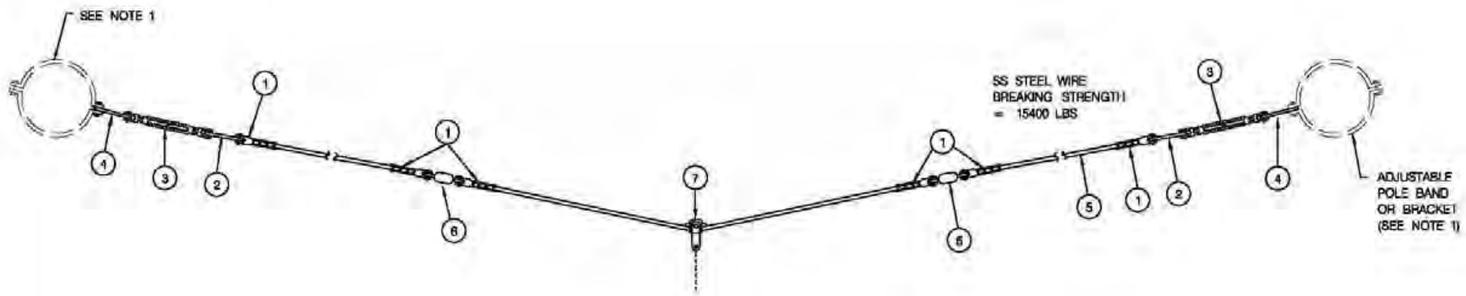

PLAN VIEW

ALONG TRACK BRIDLE WIRE – BD01, BD02 (1)

BD01 – ONE WIRE CLAMP FOR SINGLE PULL-OFF (AS SHOWN)
BD02 – TWO WIRE CLAMPS FOR TWO PULL-OFFS

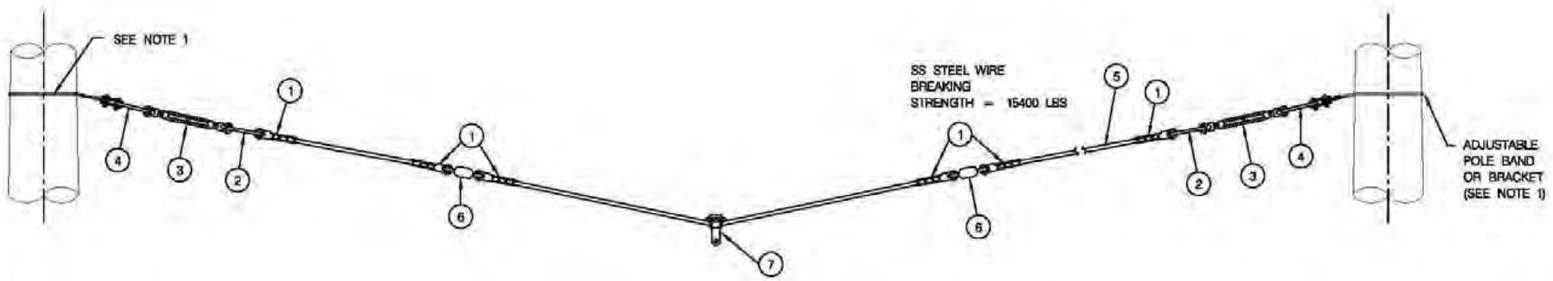

ELEVATION

BRIDLE WIRE SUPPORT – BD03 (2)

FOR SUPPORTING SINGLE CONTACT SYSTEM SECTION INSULATOR, IN SPAN INSULATION, TO BE DETERMINED TO SUIT ADJACENT WIRING AND FITTINGS

NOTES:

1. POLE BANDS AND POLE BRACKETS SHALL BE CALLED OFF SEPARATELY.
2. CONTRACTOR SHALL PROVIDE WORKING LOAD CAPACITIES FOR THESE ASSEMBLIES.
3. THE BILL OF MATERIALS DETAILS ARE TYPICAL FOR THE ASSEMBLY STYLES SHOWN. THE CONTRACTOR SHALL ITEMIZE THE TABLE WITH DESCRIPTIONS AND PART NUMBERS OF COMPONENTS REQUIRED TO COMPLETE EACH ASSEMBLY.

QUANTITIES EACH TYPE					
1	2	1	WIRE CLAMP OR BULL RING	7	
2	2	2	INSULATOR	6	
AS REQ'D	AS REQ'D	AS REQ'D	SS STEEL WIRE	5	
2	2	2	LINK	4	
2	2	2	TURNBUCKLE	3	
2	2	2	LINK	2	
6	6	6	STRAIN CLAMP	1	
BD03	BD02	BD01	DESCRIPTION	ITEM NO.	PART NO./ REMARKS
ASSEMBLY TYPE					

BILL OF MATERIALS

			RECOMMENDED: Mohamad Khalil, DEPUTY CHIEF ENGINEER	D.C. DEPARTMENT OF TRANSPORTATION
DATE	APPR.			
REVISED			APPROVED: CHIEF TRANSPORTATION ENGINEER	STREETCAR STANDARD DRAWINGS
ISSUED:		REFERENCE		OVERHEAD CONTACT SYSTEM BRIDLE WIRE ASSEMBLIES TYPES BD-1, BD-2 AND BD-3

PROJECT ENG.
DESIGNED BY
CHECKED BY
DRAWN BY
PROJECT MGR. CV
DIVISION CHIEF
DATE
FILE
DWG. NO. OCD-14

c:\pwworking\pitt\d0537325\OCD-14.dgn
1/29/2012

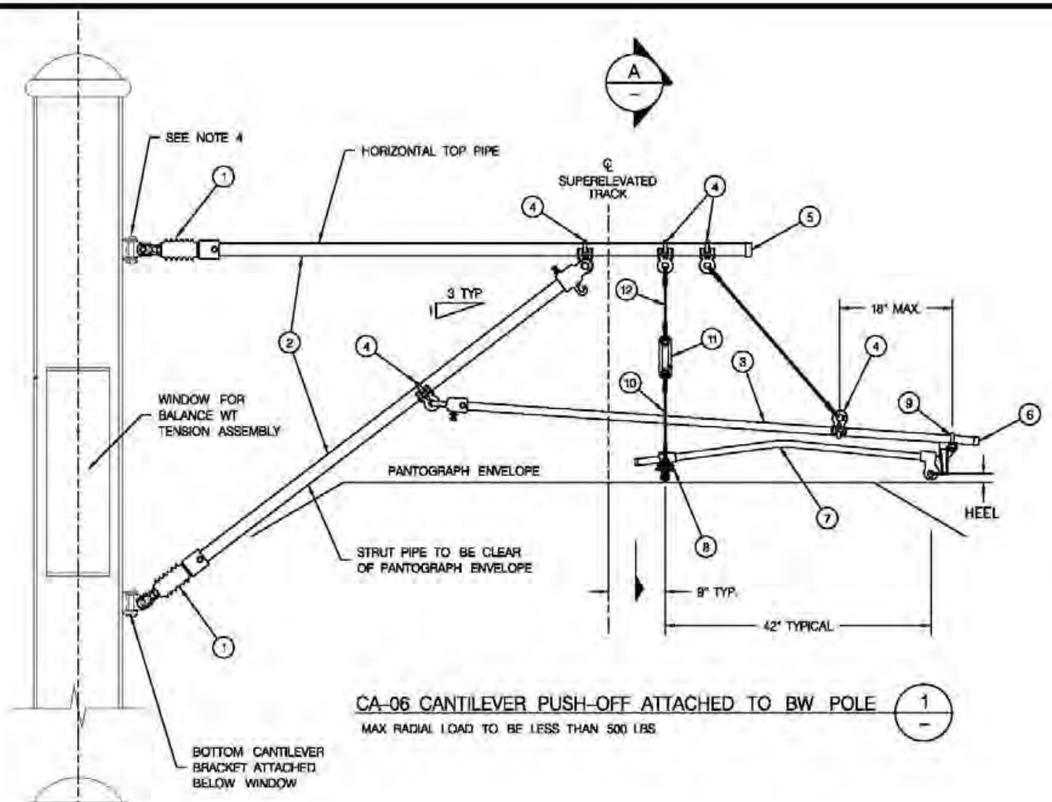

CA-06 CANTILEVER PUSH-OFF ATTACHED TO BW POLE (1/–)

MAX RADIAL LOAD TO BE LESS THAN 500 LBS

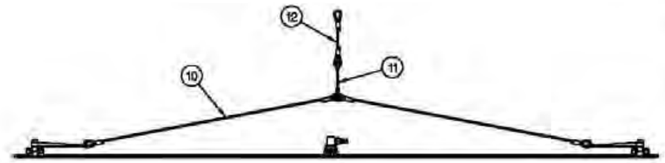

SECTION (A/–)

SCALE: NTS

NOTES:

1. FOR STEADY ARM SHAPE, ALIGNMENT AND CLEARANCE CRITERIA SEE DRAWINGS OCT-10.
2. POLE BRACKET ASSEMBLY CALLED OFF SEPARATELY.
3. CONTRACTOR SHALL DETERMINE COMPONENT DETAILS AND LOADING LIMITS.
4. CONTRACTOR SHALL FIELD VERIFY POLE OFFSET DIMENSION PRIOR TO FABRICATION OF CANTILEVER.
5. THE CONTRACT SHALL ENSURE THAT EACH STEADY ARM EQUALLY SHARES TEH C/W RADIAL LOAD.
6. THE BILL OF MATERIALS DETAILS ARE TYPICAL FOR THE ASSEMBLY STYLES SHOWN. THE CONTRACTOR SHALL ITEMIZE THE TABLE WITH DESCRIPTIONS AND PART NUMBERS OF COMPONENTS REQUIRED TO COMPLETE EACH ASSEMBLY.

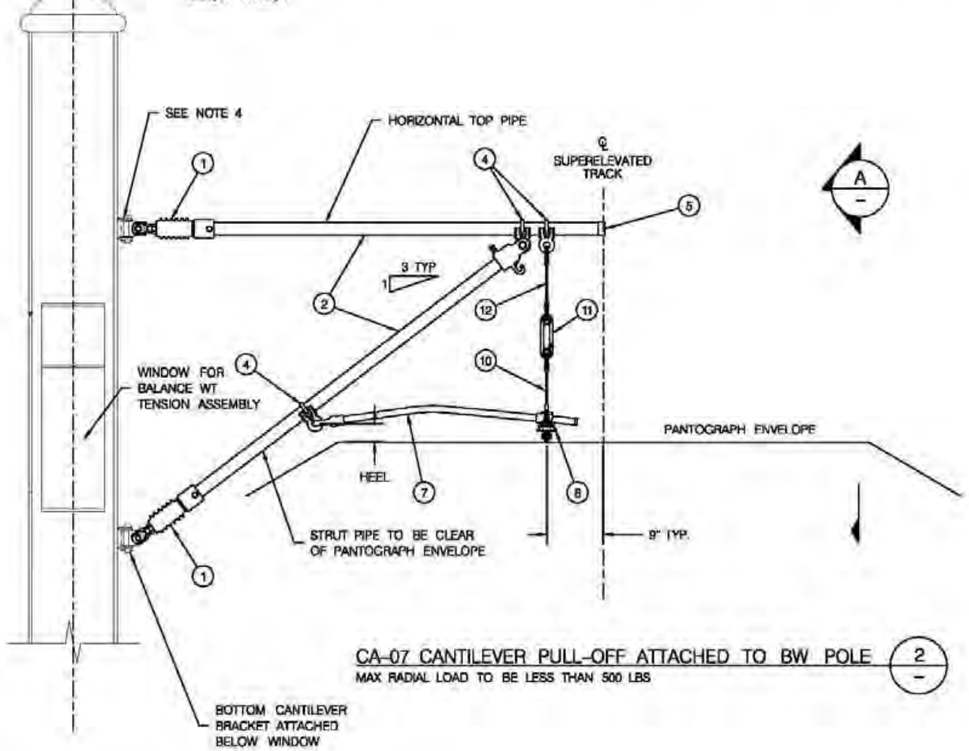

CA-07 CANTILEVER PULL-OFF ATTACHED TO BW POLE (2/–)

MAX RADIAL LOAD TO BE LESS THAN 500 LBS

QUANTITIES EACH TYPE				
			13	
–	2	HANGER ASSEMBLY	12	
–	2	LOOP INSULATOR	11	
1	1	SUPPORT BRIDLE SUB ASSEMBLY	10	
–	1	DROP BRACKET	9	
1	1	C/W SWIVEL CLAMP & INSULATOR	8	
1	1	STEADY ARM	7	
–	1	SYNTHETIC CAP FOR 1-1/4" PIPE	6	
1	1	SYNTHETIC CAP FOR 2" PIPE	5	
3	5	EYE CLAMP	4	
–	1	PIPE 1-1/4" SCHEDULE 40 GALV. W/END FITTING	3	
2	2	PIPE 2" SCHEDULE 80 GALV.	2	
2	2	CANTILEVER INSULATOR	1	
CA-07	CA-06		ITEM	PART NO/
ASSEMBLY TYPE		DESCRIPTION	NO.	REMARKS
BILL OF MATERIALS				

D.C. DEPARTMENT OF TRANSPORTATION

STREETCAR STANDARD DRAWINGS

PROJECT ENG.
DESIGNED BY
CHECKED BY
DRAWN BY
PROJECT MGR. CY

RECOMMENDED: Mohammad Khalil
DEPUTY CHIEF ENGINEER

APPROVED:
CHIEF TRANSPORTATION ENGINEER

DATE | APPR.
REVISED
ISSUED:
REFERENCE

OVERHEAD CONTACT SYSTEM
SINGLE CONTACT WIRE PUSH & PULL CANTILEVER
ATTACHED TO BALANCE WEIGHT POLE
CA-06 & CA-07

DIVISION CHIEF
DATE
FILE
DWG. NO. OCD-15

c:\pwworking\plit\d0537312\OCD-15.dgn
1/20/2012

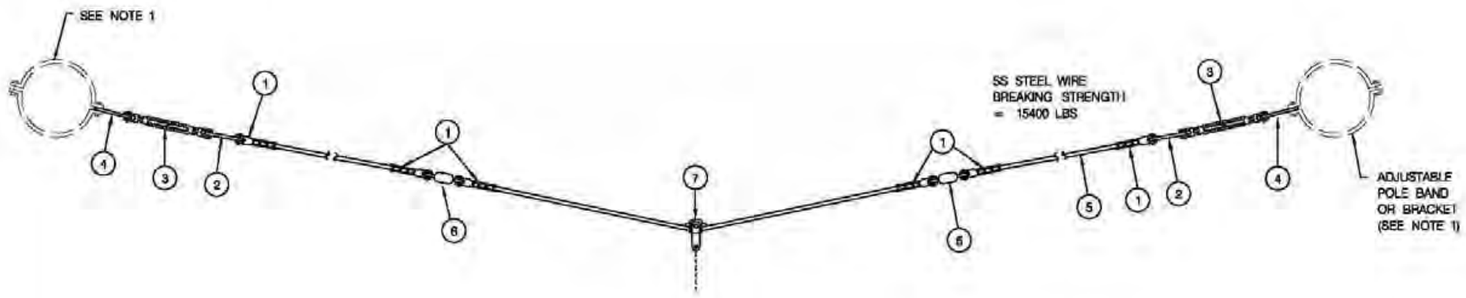

PLAN VIEW

ALONG TRACK BRIDLE WIRE – BD01, BD02 (1/–)

BD01 – ONE WIRE CLAMP FOR SINGLE PULL-OFF (AS SHOWN)
BD02 – TWO WIRE CLAMPS FOR TWO PULL-OFFS

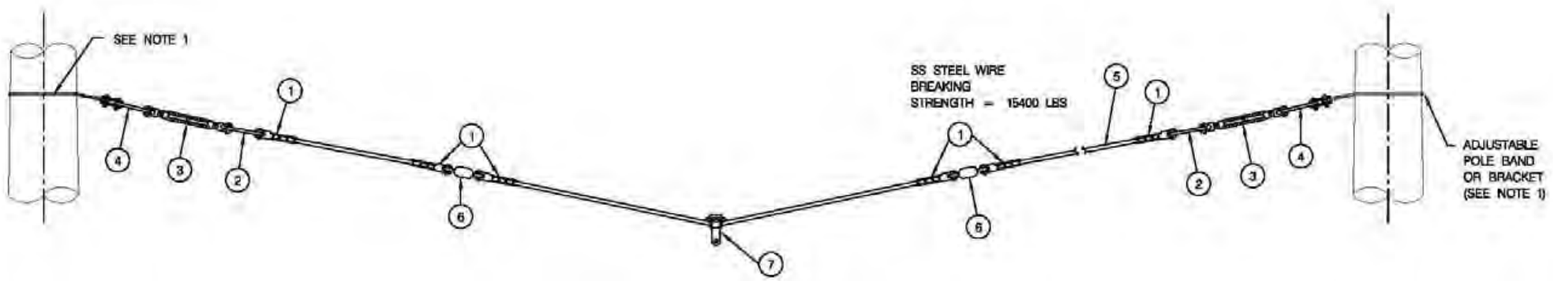

ELEVATION

BRIDLE WIRE SUPPORT – BD03 (2/–)

FOR SUPPORTING SINGLE CONTACT SYSTEM SECTION INSULATOR, IN SPAN INSULATION, TO BE DETERMINED TO SUIT ADJACENT WIRING AND FITTINGS

NOTES:

1. POLE BANDS AND POLE BRACKETS SHALL BE CALLED OFF SEPARATELY.
2. CONTRACTOR SHALL PROVIDE WORKING LOAD CAPACITIES FOR THESE ASSEMBLIES.
3. THE BILL OF MATERIALS DETAILS ARE TYPICAL FOR THE ASSEMBLY STYLES SHOWN. THE CONTRACTOR SHALL ITEMIZE THE TABLE WITH DESCRIPTIONS AND PART NUMBERS OF COMPONENTS REQUIRED TO COMPLETE EACH ASSEMBLY.

QUANTITIES EACH TYPE					
1	2	1	WIRE CLAMP OR BULL RING	7	
2	2	2	INSULATOR	6	
AS REQ'D	AS REQ'D	AS REQ'D	SS STEEL WIRE	5	
2	2	2	LINK	4	
2	2	2	TURNBUCKLE	3	
2	2	2	LINK	2	
6	6	6	STRAIN CLAMP	1	
BD03	BD02	BD01	DESCRIPTION	ITEM NO.	PART NO./ REMARKS
ASSEMBLY TYPE					

BILL OF MATERIALS

D.C. DEPARTMENT OF TRANSPORTATION

DATE	APPR.	
REVISED		
ISSUED:		
		REFERENCE

RECOMMENDED: Mohammad Khalil
DEPUTY CHIEF ENGINEER

APPROVED:
CHIEF TRANSPORTATION ENGINEER

STREETCAR STANDARD DRAWINGS

OVERHEAD CONTACT SYSTEM
BRIDLE WIRE ASSEMBLIES
TYPES BD-1, BD-2 AND BD-3

PROJECT ENG.
DESIGNED BY
CHECKED BY
DRAWN BY
PROJECT MGR. CV

DIVISION CHIEF
DATE
FILE
DWG. NO. OCD-15

c:\powerking\pitt\d0537315\OCD-15.dgn
1/29/2012

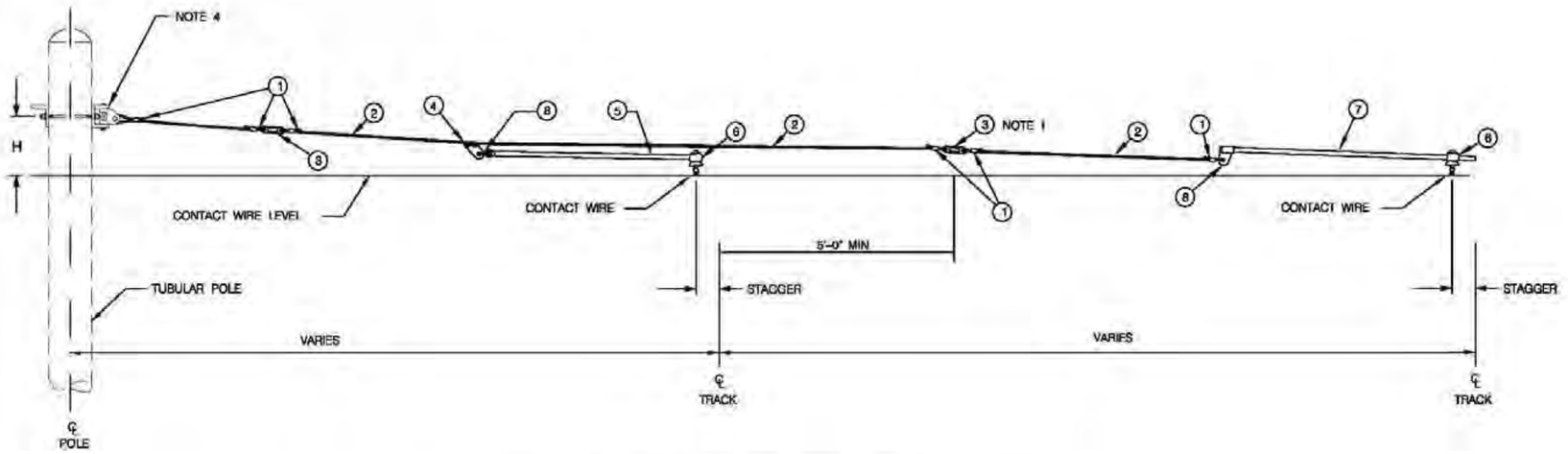

MULTI-TRACK PULL-OFF ASSEMBLY (1/–)
ASSEMBLY POP-2M – MEDIUM LOAD
ASSEMBLY POP-2H – HEAVY LOAD

NOTES:

1. FOR MULTI-TRACK PULL-OFF ASSEMBLY, WHEN CONTACT WIRES ON ALL TRACKS ARE WITHIN THE SAME ELECTRICAL SECTION, THE IN-SPAN SPAN WIRE INSULATORS SHALL BE OMITTED.
2. THE PULL-OFF ASSEMBLY SHALL ONLY BE USED WHEN THERE IS SUFFICIENT LATERAL TENSION TO PREVENT THE ASSEMBLY FROM SAGGING.
3. CONTRACTOR SHALL COMPLETE THE BILLS OF MATERIALS TABLE.
4. TUBULAR POLE ASSEMBLY AND BRACKET ASSEMBLY EACH CALLED OFF SEPARATELY.
5. WHERE THE WORKING LOAD CAPABILITIES OF THE CONTRACTORS ASSEMBLIES EXCEED THOSE SHOWN IN THE LOADING TABLE, THE CONTRACTOR SHALL UPDATE THE TABLE.
6. THE BILL OF MATERIALS DEATILS ARE TYPICAL FOR THE ASSEMBLY STYLES SHOWN. THE CONTRACTOR SHALL ITEMIZE THE TABLE WITH DESCRIPTIONS AND PART NUMBERS OF COMPONENTS REQUIRED TO COMPLETE EACH ASSEMBLY.

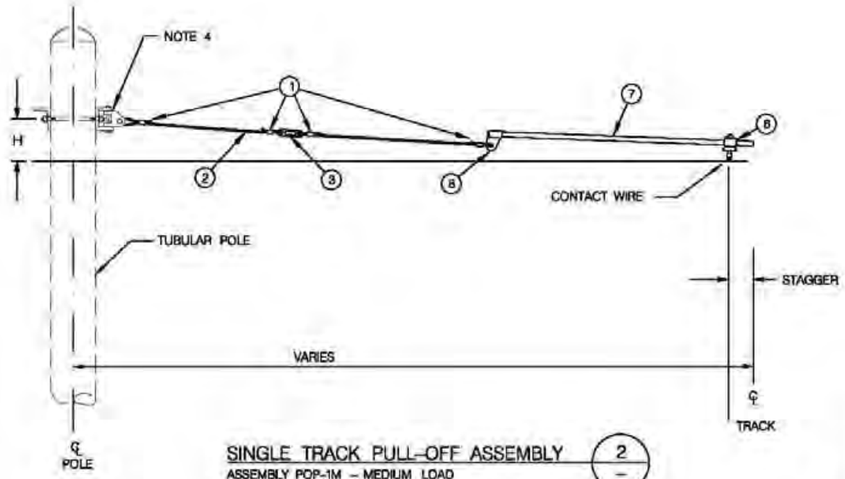

SINGLE TRACK PULL-OFF ASSEMBLY (2/–)
ASSEMBLY POP-1M – MEDIUM LOAD
ASSEMBLY POP-1H – HEAVY LOAD

QUANTITIES EACH TYPE						
2	1	–	–	LINK FOR DOUBLE STEADY ARMS	8	
2	2	1	1	STEADY ARM WITH HEEL FITTING	7	
4	2	2	1	SWIVEL CLAMP	6	
2	–	1	–	STEADY ARM	5	
1	–	1	–	CLAMP BRACKET	4	
2	1	2	1	LOOP INSULATOR	3	
AS REQ'D	AS REQ'D	AS REQ'D	AS REQ'D	WIRE – 3/8" STAINLESS WIRE ROPE	2	
6	4	8	4	THIMBLE AND SLEEVE	1	
POP-2H	POP-1H	POP-2M	POP-1M		ITEM	PART NO./
ASSEMBLY TYPE				DESCRIPTION	NO.	REMARKS
BILL OF MATERIALS						

WORST CASE LOADING PER CONTACT WIRE

LOAD ON WIRE	RADIAL LOAD (LB)	WIND LOAD (LB)	STEADY ARM
MEDIUM LOAD	500	50	SINGLE
HEAVY LOAD	1000	20	DOUBLE

D.C. DEPARTMENT OF TRANSPORTATION

DATE	APPR.	
REVISED		
ISSUED:		REFERENCE

RECOMMENDED: Mohammed Khalid
DEPUTY CHIEF ENGINEER

APPROVED: [signature]
CHIEF TRANSPORTATION ENGINEER

STREETCAR STANDARD DRAWINGS

OVERHEAD CONTACT SYSTEM
MEDIUM AND HEAVY PULL-OFF ASSEMBLIES
POP-1M, POP-1H, POP-2M & POP-2H

PROJECT ENG.
DESIGNED BY
CHECKED BY
DRAWN BY
PROJECT MGR. CY
DIVISION CHIEF
DATE
FILE
DWG. NO. OCD-17

c:\pwworking\pitt\d0537312\OCD-17.dgn
1/20/2012

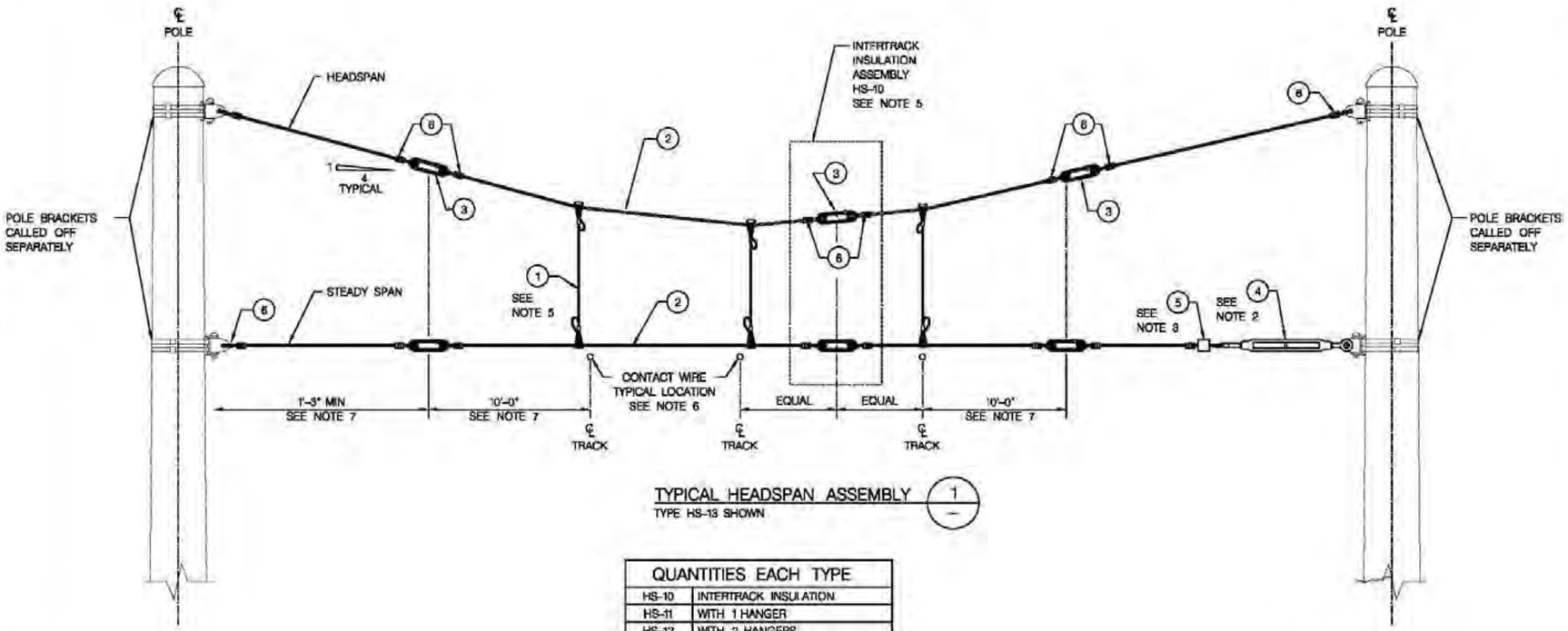

TYPICAL HEADSPAN ASSEMBLY (1/–)
TYPE HS-13 SHOWN

QUANTITIES EACH TYPE	
HS-10	INTERTRACK INSULATION
HS-11	WITH 1 HANGER
HS-12	WITH 2 HANGERS
HS-13	WITH 3 HANGERS
HS-14	WITH 4 HANGERS

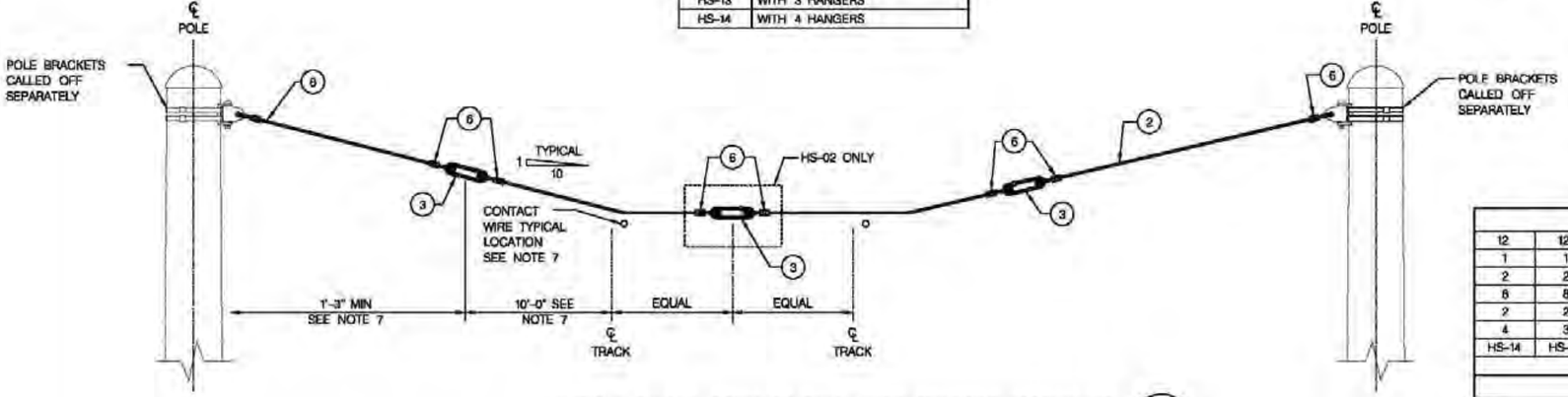

TYPICAL SINGLE CONTACT SPAN WIRE SUPPORT ASSEMBLIES (2/–)
ASSEMBLY TYPE HS-01 FOR ONE OR TWO TRACKS
ASSEMBLY TYPE HS-02 FOR TWO TRACK WITH INTERTRACK INSULATION

NOTES:

1. THE BILL OF MATERIALS DETAILS ARE TYPICAL FOR THE ASSEMBLY STYLES SHOWN. THE CONTRACTOR SHALL ITEMIZE THE TABLE WITH DESCRIPTIONS AND PART NUMBERS OF COMPONENTS REQUIRED TO COMPLETE EACH ASSEMBLY.
2. LOCATE TURNBUCKLE ON THE SLACKER SIDE OF THE SPAN WIRES THIS IS TYPICALLY INSIDE OF CURVES.
3. A CROSS SPAN WIRE VIBRATION DAMPER IS REQUIRED ONLY IF ONE OR BOTH ENDS OF THE CROSS SPAN WIRE ARE ATTACHED TO A BUILDING, A MULTIPLE POLE HEADSPAN STRUCTURE, CONCRETE POLE, OR OTHER RIGID SUPPORT. THE SPRING IS TO BE LOCATED ADJACENT TO THE TURNBUCKLE.
4. TYPICALLY LOCATE A SPAN WIRE HANGER ABOVE OR NEAR EACH ATTACHED CONTACT WIRE SUPPORT.
5. INTERTRACK INSULATION ASSEMBLIES (HS-10) ARE REQUIRED TO BE INSTALLED BETWEEN TRACKS WHERE CONTACT WIRES ARE FED ELECTRICALLY THROUGH DIFFERENT SWITCHES, OR HAVE UNINSULATED WIRE SUPPORT ASSEMBLIES. SEE SECTIONALIZING DIAGRAMS AND OCS LAYOUT PLAN.
6. THE CONTACT WIRE SHALL BE ATTACHED TO THESE SPAN WIRES USING INSULATED CONTACT WIRE SUPPORT AND REGISTRATION ASSEMBLIES. SEE DRAWING OCD-19.
7. SECOND LEVEL INSULATION TO BE LOCATED 10 FT FROM TRACK CENTERLINE EXCEPT IN CASES WHEN THE POLE FACE IS LESS THAN 11'-3" FROM TRACK CENTERLINE, A MINIMUM OF 1'-3" FROM FACE OF POLE IS REQUIRED.

QUANTITIES EACH TYPE							DESCRIPTION	ITEM NO.	PART NO./ REMARKS
12	12	12	12	4	8	6	COMPRESSION CONNECTOR	6	
1	1	1	1	–	–	–	VIBRATION DAMPER	5	SEE NOTE 4
2	2	2	2	–	1	1	TURNBUCKLE	4	SEE NOTE 3
8	8	8	8	2	3	2	INSULATOR, STRAIN TYPE	3	
2	2	2	2	–	1	1	SS STEEL WIRE, 7x19 ⌀ " TYP	2	LENGTH AS REQ'D
4	3	2	1	–	–	–	HANGER ASSEMBLY	1	
HS-14	HS-13	HS-12	HS-11	HS-10	HS-02	HS-01			
ASSEMBLY TYPE									

BILL OF MATERIALS

DATE	APPR.	
REVISED		
ISSUED:		REFERENCE

RECOMMENDED: Mohammad Khalil
DEPUTY CHIEF ENGINEER

APPROVED:
CHIEF TRANSPORTATION ENGINEER

D.C. DEPARTMENT OF TRANSPORTATION

STREETCAR STANDARD DRAWINGS

OVERHEAD CONTACT SYSTEM
HEADSPAN AND CROSS SPAN SUPPORT
ASSEMBLIES TYPES HS

PROJECT ENG.
DESIGNED BY
CHECKED BY
DRAWN BY
PROJECT MGR. CV
DIVISION CHIEF
DATE
FILE
DWG. NO. OCD-18

c:\pwworking\pitt\d0537325\OCD-18.dgn
1/29/2012

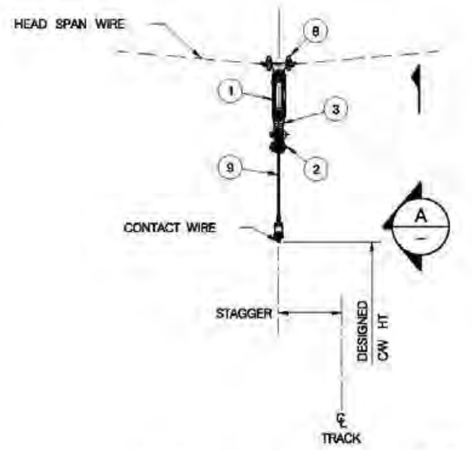

LIGHT LOAD CW SUPPORT 1

ASSEMBLY HR-1L
UP TO 200 LB RADIAL LOAD

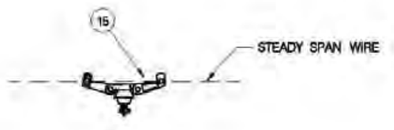

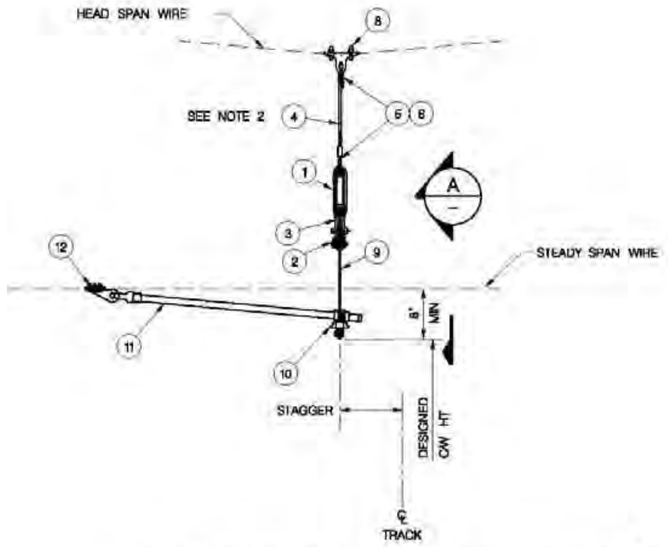

MEDIUM LOAD CW SUPPORT & REGISTRATION 3

ASSEMBLY HR-1M
UP TO 500 LB RADIAL LOAD

NOTES:

1. THE BILL OF MATERIALS DETAILS ARE TYPICAL FOR THE ASSEMBLY STYLES SHOWN. THE CONTRACTOR SHALL ITEMIZE THE TABLE WITH DESCRIPTIONS AND PART NUMBERS OF COMPONENTS REQUIRED TO COMPLETE EACH ASSEMBLY.
2. SUPPORTING HANGERS FOR STEADY SPAN WIRE OR HEAD SPAN WIRE TO BE CALLED OUT SEPARATELY FROM HEADSPAN SUPPORT ASSEMBLIES SHOWN ON DWG OCD-18.

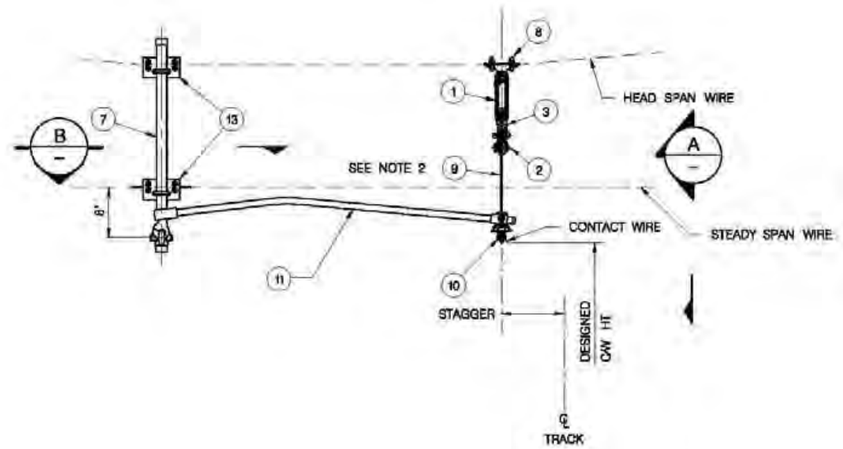

LIGHT LOAD CW SUPPORT & REGISTRATION 2

ASSEMBLY HR-2L
UP TO 200 LB RADIAL LOAD

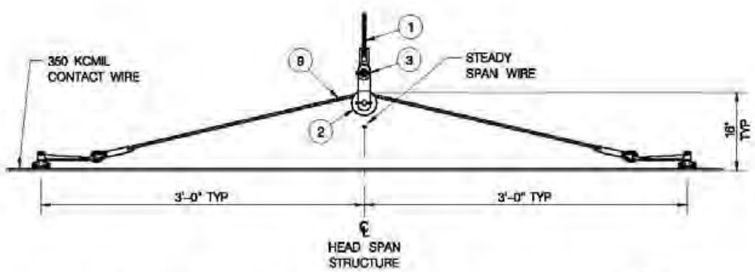

SECTION A

SCALE: NTS (SHOWN WITH STEADY ARM OMITTED FOR CLARITY)

QUANTITIES EACH TYPE						
–	–	1	–	DOUBLE EYE CLAMP	15	
1	–	–	–	DOUBLE EYE CLAMP	14	
1	–	–	–	CLAMP FOR CROSS SPAN DROP TUBE	13	
–	1	–	–	CROSS SPAN EYE CLAMP	12	
2	1	–	–	STEADY ARM	11	
2	1	–	–	CW SWIVEL CLAMP & INSULATOR	10	
1	1	–	1	SUPPORT BRIDLE SUB ASSEMBLY	9	
1	1	–	1	WIRE SUSPENSION CLAMP	8	
1	–	–	–	1-1/4" PIPE SCHED 80 GALV.	7	
–	2	–	–	THIMBLE, SST	6	
–	2	–	–	COMPRESSED SLEEVE	5	
–	1	–	–	HANGER WIRE	4	LENGTH AS REQ'D
1	1	–	1	CLEVIS-CLEVIS LINK	3	
1	1	–	1	BRIDLE PULLEY	2	
1	1	–	1	INSULATOR	1	
HR-1H	HR-1M	HR-2L	HR-1L	DESCRIPTION	ITEM NO.	PART NO./ REMARKS
ASSEMBLY TYPE						

BILL OF MATERIALS

HEAVY LOAD SUPPORT AND REGISTRATION 4

ASSEMBLY HR-1H
UP TO 1000 LB CW RADIAL LOAD WHEN

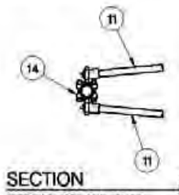

SECTION B

DOUBLE STEADY ARM

D.C. DEPARTMENT OF TRANSPORTATION

DATE	APPR.	
REVISED		
ISSUED:		REFERENCE

RECOMMENDED: Mohammad Khalid
DEPUTY CHIEF ENGINEER

APPROVED:
CHIEF TRANSPORTATION ENGINEER

STREETCAR STANDARD DRAWINGS

OVERHEAD CONTACT SYSTEM
HEADSPAN REGISTRATION ASSEMBLIES
AUTO-TENSIONED SINGLE CONTACT WIRE
TYPES HR

PROJECT ENG.
DESIGNED BY
CHECKED BY
DRAWN BY
PROJECT MGR. CV

DIVISION CHIEF
DATE
FILE
DWG. NO. OCD-18

c:\pwworking\pitt\d0537312\OCD-18.dgn
1/20/2012

NOTES:

1. ALL CLAMPS, WIRES AND FITTINGS SHALL HAVE SUFFICIENT STRENGTH TO RESTRAIN THE CONTACT WIRE ON ONE SIDE UNDER BROKEN CONTACT WIRE CONDITIONS.
2. MIDPOINT SPAN GUY WIRE TO BE STAINLESS STEEL STRAND OR HD COPPER STRAND CAPABLE OF HOLDING THE SINGLE CONTACT WIRE SYSTEM WHEN AT HIGHEST TENSIONS SHOWN ON OCT-11.
3. CONTACT WIRE RESTRAINT TO BE HD COPPER STRAND CAPABLE OF HOLDING CONTACT WIRE WHEN AT THE HIGHEST TENSIONS SHOWN ON OCT-11.
4. THE BILL OF MATERIALS DETAILS ARE TYPICAL FOR THE ASSEMBLY STYLES SHOWN. THE CONTRACTOR SHALL ITEMIZE THE TABLE WITH DESCRIPTIONS AND PART NUMBERS OF COMPONENTS REQUIRED TO COMPLETE EACH ASSEMBLY.
5. REFER TO TYPICAL MIDPOINT ANCHOR ARRANGEMENT DRAWING OCD-06 FOR ADDITIONAL REQUIREMENTS FOR DIMENSIONS AND ERECTION TENSIONS.
6. POLE BRACKET ASSEMBLIES CALLED OFF SEPARATELY.

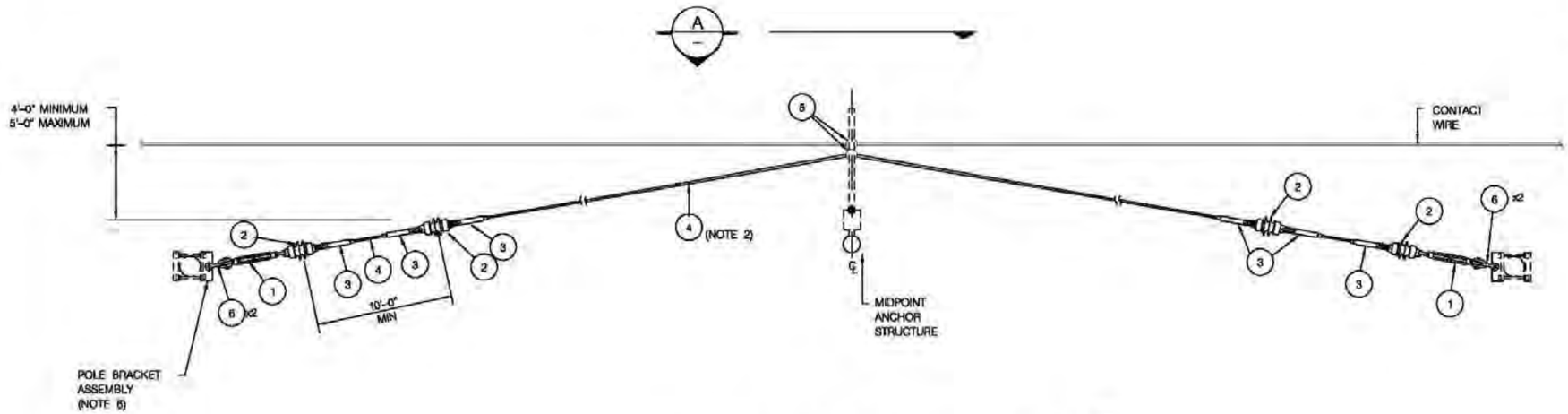

MIDPOINT ASSEMBLY ON CROSS SPAN/CANTILEVER (1)
ASSEMBLY MP-01

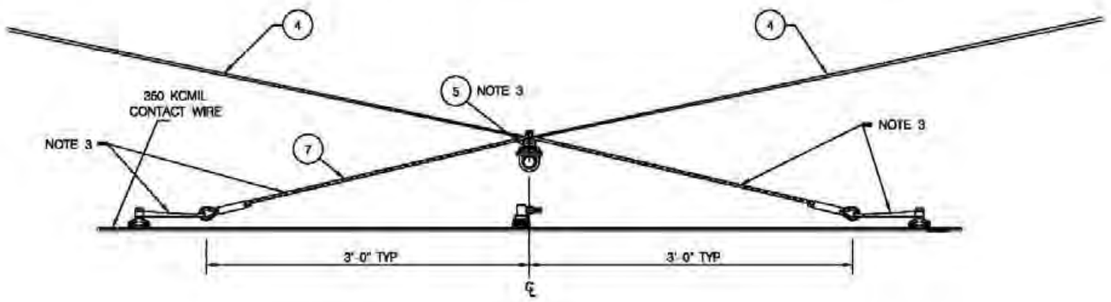

SECTION (A)
SCALE: NTS

QUANTITIES EACH TYPE				
	1	SUPPORT BRIDLE	7	
	4	SHACKLE	6	
	2	SUSPENSION INSULATED CLAMP	5	(NOTE 1 & 3)
	AS REQ'D	SPAN GUY WIRE	4	(NOTE 2)
	6	WIRE DEADEND	3	
	4	STRAIN INSULATOR	2	
	2	TURNBUCKLE	1	
	MP-01		ITEM	PART NO./
ASSEMBLY TYPE		DESCRIPTION	NO.	REMARKS

BILL OF MATERIALS

DATE	APPR.	
REVISED		
ISSUED:		REFERENCE

RECOMMENDED: Mohammad Khalil
DEPUTY CHIEF ENGINEER

APPROVED:
CHIEF TRANSPORTATION ENGINEER

D.C. DEPARTMENT OF TRANSPORTATION

STREETCAR STANDARD DRAWINGS

OVERHEAD CONTACT SYSTEM
MIDPOINT GUY ASSEMBLY
TYPE MP-1

PROJECT ENG.
DESIGNED BY
CHECKED BY
DRAWN BY
PROJECT MGR. DY
DIVISION CHIEF
DATE
FILE
DWG. NO. OCD-28

c:\pwwork\dcdot\d0537373\OCD-28.dgn 12/5/2013

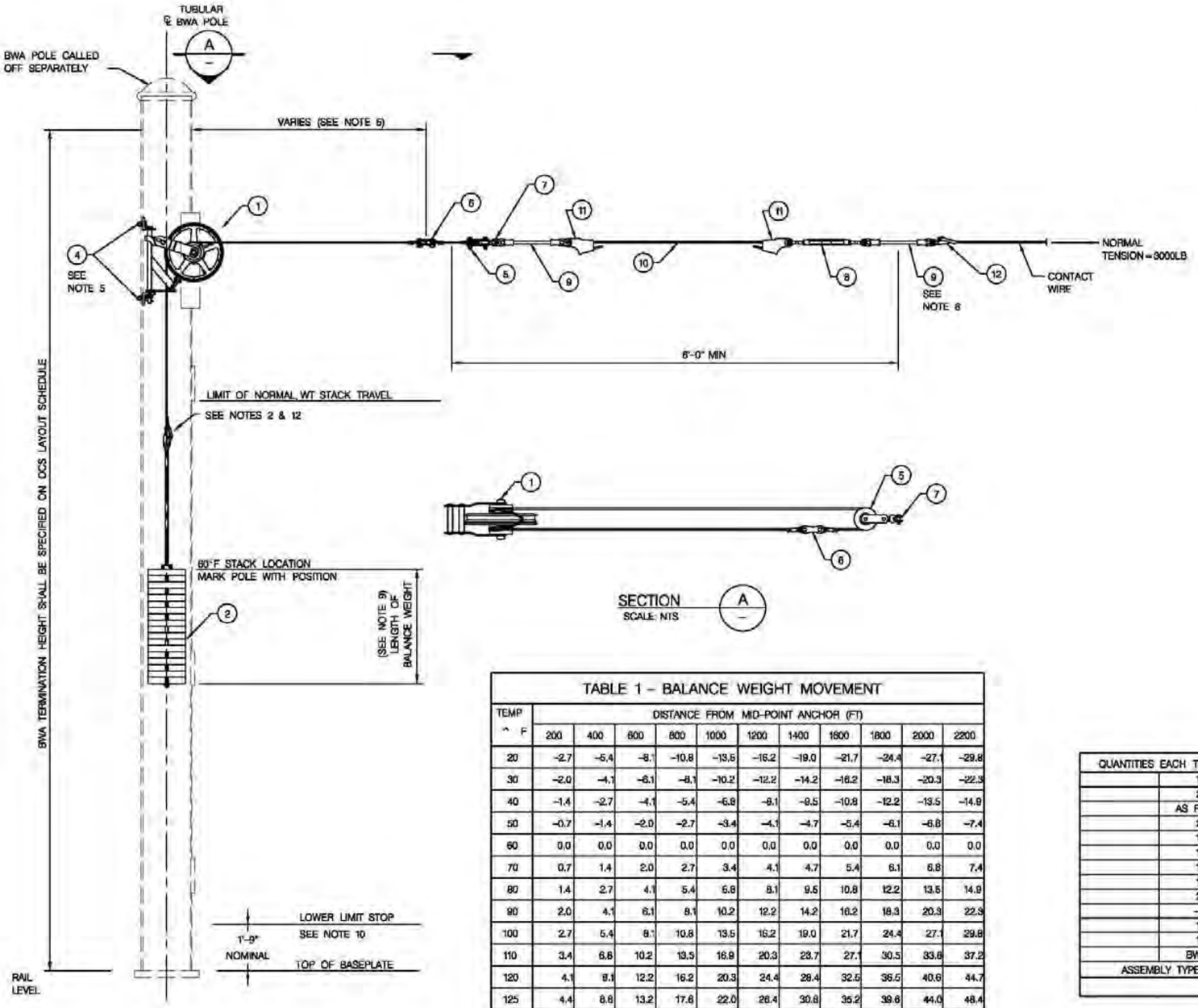

TABLE 1 – BALANCE WEIGHT MOVEMENT											
TEMP ^ F	DISTANCE FROM MID-POINT ANCHOR (FT)										
	200	400	600	800	1000	1200	1400	1600	1800	2000	2200
20	-2.7	-5.4	-8.1	-10.8	-13.5	-16.2	-19.0	-21.7	-24.4	-27.1	-29.8
30	-2.0	-4.1	-6.1	-8.1	-10.2	-12.2	-14.2	-16.2	-18.3	-20.3	-22.3
40	-1.4	-2.7	-4.1	-5.4	-6.8	-8.1	-9.5	-10.8	-12.2	-13.5	-14.9
50	-0.7	-1.4	-2.0	-2.7	-3.4	-4.1	-4.7	-5.4	-6.1	-6.8	-7.4
60	0.0	0.0	0.0	0.0	0.0	0.0	0.0	0.0	0.0	0.0	0.0
70	0.7	1.4	2.0	2.7	3.4	4.1	4.7	5.4	6.1	6.8	7.4
80	1.4	2.7	4.1	5.4	6.8	8.1	9.5	10.8	12.2	13.5	14.9
90	2.0	4.1	6.1	8.1	10.2	12.2	14.2	16.2	18.3	20.3	22.3
100	2.7	5.4	8.1	10.8	13.5	16.2	19.0	21.7	24.4	27.1	29.8
110	3.4	6.8	10.2	13.5	16.9	20.3	23.7	27.1	30.5	33.6	37.2
120	4.1	8.1	12.2	16.2	20.3	24.4	28.4	32.5	36.5	40.6	44.7
125	4.4	8.8	13.2	17.6	22.0	26.4	30.8	35.2	39.6	44.0	48.4

DIMENSION GIVEN IN INCHES
SEE NOTE 7

BALANCE WEIGHT MOVEMENT
"-" MOVES UPWARD
"+" MOVES DOWNWARD

NOTES:

1. THE ASSEMBLY SHALL APPLY A NORMAL TENSION OF 3000 LB CONTACT WIRE.
2. PROVIDE SUFFICIENT TAIL WIRE FOR FIELD ADJUSTMENT. THE EXCESS TAIL WIRE SHALL BE CUT OFF ONLY AFTER FINAL ADJUSTMENT.
3. TENSION ASSEMBLY SHALL HAVE A RATIO OF 1:3. TENSION ASSEMBLY SHALL BE DESIGNED SO THAT IT WILL BECOME LOCKED IN CASE OF A TENSION RELIEF.
4. AFTER FINAL ADJUSTMENT OF WIRING, TURNBUCKLES SHALL BE EXTENDED 6" MINIMUM FROM MINIMUM LENGTH.
5. MOUNTING BRACKET SHALL BE FURNISHED TO PERMIT ALONG TRACK AND ACROSS TRACK ADJUSTMENTS FOR PLUMBING OF BALANCE WEIGHT GUIDES.
6. CONTRACTOR SHALL FURNISH THIS DIMENSION, BASED ON PHYSICAL AND MECHANICAL PROPERTIES OF THE TENSIONING WHEEL, BALANCE WEIGHT ASSEMBLY AND THE ALONG TRACK MOVEMENT OF THE OCS.
7. THE INFORMATION FURNISHED IN TABLE 1 IS BASED ON A 1:3 RATIO PULLEY SYSTEM AND IS PROVIDED FOR REFERENCE ONLY. CONTRACTOR SHALL DETERMINE THE ACTUAL BALANCE WEIGHT MOVEMENT, BASED ON ACTUAL BALANCE WEIGHT ASSEMBLIES PROVIDED.
8. THE CW TAIL WIRE INSULATOR IS TO BE NO CLOSER THAN 4'-0" TO SUPERELEVATED TRACK CENTERLINE.
9. CONTRACTOR SHALL DETERMINE THE LENGTH OF THE BALANCE WEIGHT STACK, BASED ON THE REQUIRED OVERALL WEIGHT AND SIZE OF EACH BALANCE WEIGHT. MAXIMUM WIDTH OF THE WEIGHT SHALL FIT WITHIN THE STANDARD TUBULAR BWA POLE.
10. THE BALANCE WEIGHT SHALL MOVE FREELY WITHIN THE TEMPERATURE RANGE OF 5° F TO 125° F, AND WITHIN THE SPACE BETWEEN TEMPERATURE STOPS. TEMPERATURE STOP BOLTS SHALL BE INSTALLED TO PREVENT BALANCE WEIGHT MOVEMENT BEYOND THE SET TEMPERATURE RANGE.
11. THE MOUNTING ARRANGEMENT OF BALANCE WEIGHT ASSEMBLY AS SHOWN IS TYPICAL. THE CONTRACTOR SHALL DEVELOP THE DESIGN BASED ON THE EQUIPMENT ACTUALLY USED AND THE MANUFACTURER'S RECOMMENDATIONS AS APPROVED BY THE DISTRICT.
12. THE CONTRACTOR SHALL INSURE THAT NO INTERFERENCE OCCURS BETWEEN ALL POLE CLAMPS AND BRACKETS AND THE BWA-WIRE ROPE TERMINATIONS FOR THEIR TOTAL VERTICAL TRAVEL. PROVIDE A MINIMUM OF 2" OF FREE SPACE TO ALL MOVING WIRE COMPONENTS.
13. THE BILL OF MATERIALS DETAILS ARE TYPICAL FOR THE ASSEMBLY STYLES SHOWN. THE CONTRACTOR SHALL ITEMIZE THE TABLE WITH DESCRIPTIONS AND PART NUMBERS OF COMPONENTS REQUIRED TO COMPLETE EACH ASSEMBLY.
14. THE CONNECTION OF THE BALANCE WEIGHT ASSEMBLY TO THE TENSIONING SHEAVE BRACKET SHALL BE DESIGNED TO ALLOW UNRESTRICTED MOVEMENT OF THE SHEAVE ASSEMBLY. THE SHEAVE ASSEMBLY SHALL BE ALIGNED TOWARDS THE REGISTRATION POINT OF THE OUT-OF-RUNNING CANTILEVER.

BILL OF MATERIALS				
ASSEMBLY TYPE		DESCRIPTION	ITEM NO.	PART NO/ REMARKS
	BW-01			
	1	TENSIONING WHEEL ASSEMBLY	1	
	1	BALANCE WEIGHT STACK	2	
	-	-	3	
	2	TERMINATION BRACKETS	4	
	1	SMALL PULLEY	5	
	1	LINK PLATE DOUBLE ENDED CLEVIS	6	
	1	SHACKLE OR SWIVEL	7	
	1	TURNBUCKLE	8	
	2	STRAIN INSULATOR	9	
	AS REQ'D	STAINLESS STEEL WIRE ROPE	10	
	2	WIRE END FITTING	11	
	1	CONTACT WIRE DEAD END CLAMPS	12	
QUANTITIES EACH TYPE				

D.C. DEPARTMENT OF TRANSPORTATION

DATE	APPR.	
REVISED		
ISSUED:		REFERENCE

RECOMMENDED: Mohammad Khalil
DEPUTY CHIEF ENGINEER

APPROVED:
CHIEF TRANSPORTATION ENGINEER

STREETCAR STANDARD DRAWINGS

OVERHEAD CONTACT SYSTEM
BALANCE WEIGHT ANCHOR ASSEMBLY
TYPE BW-01

PROJECT ENG.
DESIGNED BY
CHECKED BY
DRAWN BY
PROJECT MGR. CV
DIVISION CHIEF
DATE
FILE
DWG. NO. OCD-21

c:\pwworking\pitt\d0537316\OCD-21.dgn
1/20/2012

NOTES:

1. THE BILL OF MATERIALS DETAILS ARE TYPICAL FOR THE ASSEMBLY STYLES SHOWN. THE CONTRACTOR SHALL ITEMIZE THE TABLE WITH DESCRIPTIONS AND PART NUMBERS OF COMPONENTS REQUIRED TO COMPLETE EACH ASSEMBLY.
2. AFTER FINAL ADJUSTMENT OF WIRING, TURNBUCKLES SHALL BE EXTENDED 6" MINIMUM FROM MINIMUM LENGTH.
3. THE CW TAIL WIRE INSULATORS ARE TO BE NO CLOSER THAN 4'-0" TO SUPERELEVATED TRACK CENTERLINE.

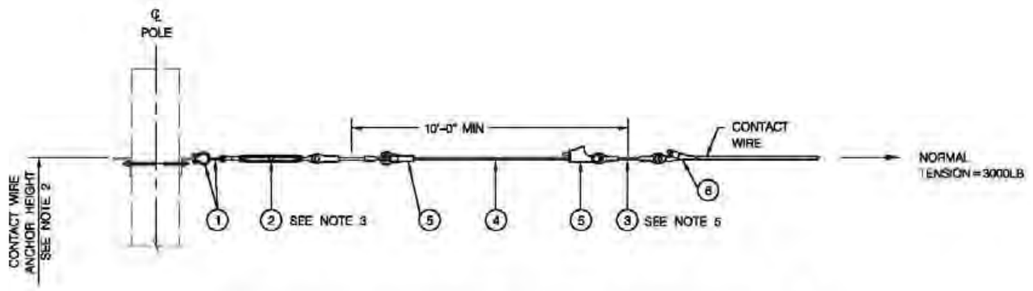

FIXED ANCHOR ASSEMBLY FOR SINGLE CONTACT WIRE (1/–)
ASSEMBLY FA-1

QUANTITIES EACH TYPE				
	1	CONTACT WIRE DEADEND	6	
	2	WIRE END FITTING	5	
	AS REQ'D	STAINLESS STELL WIRE ROPE	4	
	2	STRAIN INSULATOR	3	
	1	TURNBUCKLE	2	
	2	SHACKLE	1	
	FA-1		ITEM	PART NO./
ASSEMBLY TYPE		DESCRIPTION	NO.	REMARKS
BILL OF MATERIALS				

D.C. DEPARTMENT OF TRANSPORTATION

DATE	APPR.		RECOMMENDED: Mohamed Khalil DEPUTY CHIEF ENGINEER	STREETCAR STANDARD DRAWINGS
REVISED				
ISSUED:		REFERENCE	APPROVED: CHIEF TRANSPORTATION ENGINEER	OVERHEAD CONTACT SYSTEM FIXED TERMINATION ASSEMBLY TYPE FA-1

PROJECT ENG.
DESIGNED BY
CHECKED BY
DRAWN BY
PROJECT MGR. CY
DIVISION CHIEF
DATE
FILE
DWG. NO. OCD-82

c:\pwworking\plit\d0537312\OCD-22.dgn
1/20/2012

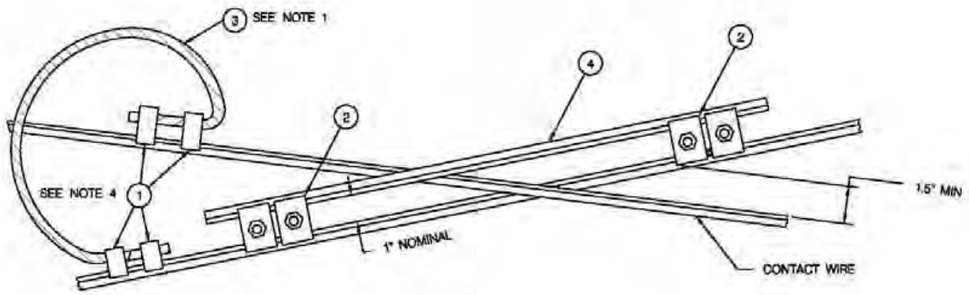

SINGLE CONTACT SYSTEM CROSS CONTACT AND JUMPER (1/–)
ASSEMBLY CC-1

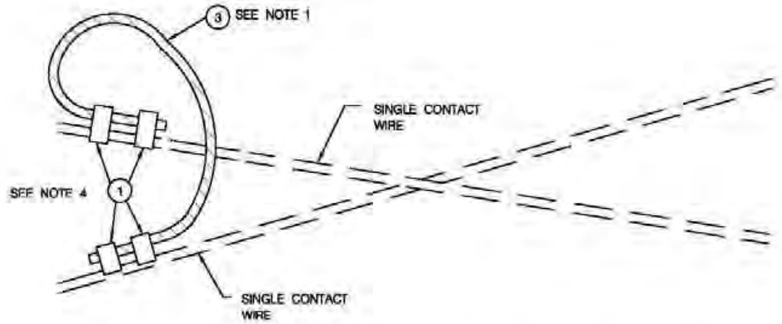

SINGLE CONTACT SYSTEM FULL CURRENT JUMPER (2/–)
ASSEMBLY JC-1 (FOR UN-INSULATED OVERLAP SPANS AND CROSSED CONTACT ARRANGEMENTS)

NOTES:

1. WHEN INSTALLING A JUMPER BETWEEN WIRES THE CONTRACTOR SHALL DRAPE THE JUMPER WIRE SUFFICIENTLY TO PROVIDE FOR DIFFERENTIAL ALONG TRACK MOVEMENT OF THE TENSION LENGTHS. ANY BENDS IN JUMPER WIRE SHALL BE NO LESS THAN 6" RADIUS.
2. CONTACT WIRE IS 350 KCMIL HD COPER SOLID GROOVED.
3. BEFORE ASSEMBLY, WIRES ARE TO BE WIRE BRUSH CLEANED, THEN GREASED AS INSTRUCTED BY CLAMP MANUFACTURER.
4. CUT ENDS OF JUMPER WIRE TO PROTRUDE TYPICALLY 1" BEYOND ADJACENT CLAMP. ENDS TO BE BOUND TO PREVENT FRAYING.
5. THE CONTRACTOR MAY SUBSTITUTE ONE TWO-BOLT CONTACT/JUMPER CLAMP FOR EACH PAIR OF CLAMPS SHOWN.
6. THE BILL OF MATERIALS DETAILS ARE TYPICAL FOR THE ASSEMBLY STYLES SHOWN. THE CONTRACTOR SHALL ITEMIZE THE TABLE WITH DESCRIPTIONS AND PART NUMBERS OF COMPONENTS REQUIRED TO COMPLETE EACH ASSEMBLY.

QUANTITIES EACH TYPE				
AS REQ'D	–	350 KCMIL CONTACT WIRE CUT LENGTH	4	
AS REQ'D	AS REQ'D	JUMPER WIRE, 350 KCMIL GLASS G OR H	3	
4	–	CLAMP, PARALLEL GROOVE CLAMP	2	
4	4	CLAMP, CONTACT/JUMPER	1	
CC-1	JC-1		ITEM	PART NO./
ASSEMBLY TYPE		DESCRIPTION	NO.	REMARKS
BILL OF MATERIALS				

			RECOMMENDED: Mohammad Khalil, DEPUTY CHIEF ENGINEER	D.C. DEPARTMENT OF TRANSPORTATION
DATE	APPR.		APPROVED: CHIEF TRANSPORTATION ENGINEER	STREETCAR STANDARD DRAWINGS
REVISED				OVERHEAD CONTACT SYSTEM JUMPER ASSEMBLY – TYPE JC CROSS CONTACT ASSEMBLY – TYPE CC
ISSUED:		REFERENCE		

PROJECT ENG.
DESIGNED BY
CHECKED BY
DRAWN BY
PROJECT MGR. CY
DIVISION CHIEF
DATE
FILE
DWG. NO. CCD-23

c:\pwworking\pit1\d0537315\CCD-23.dgn
1/20/2012

NOTES:

1. CONTRACTOR SHALL DESIGN AND INSTALL A SUPPORT SUB ASSEMBLY.
2. SECTION INSULATORS SHALL BE INSTALLED AS PER MANUFACTURERS INSTRUCTIONS.
3. THE BILL OF MATERIALS DETAILS ARE TYPICAL FOR THE ASSEMBLY STYLES SHOWN. THE CONTRACTOR SHALL ITEMIZE THE TABLE WITH DESCRIPTIONS AND PART NUMBERS OF COMPONENTS REQUIRED TO COMPLETE EACH ASSEMBLY.

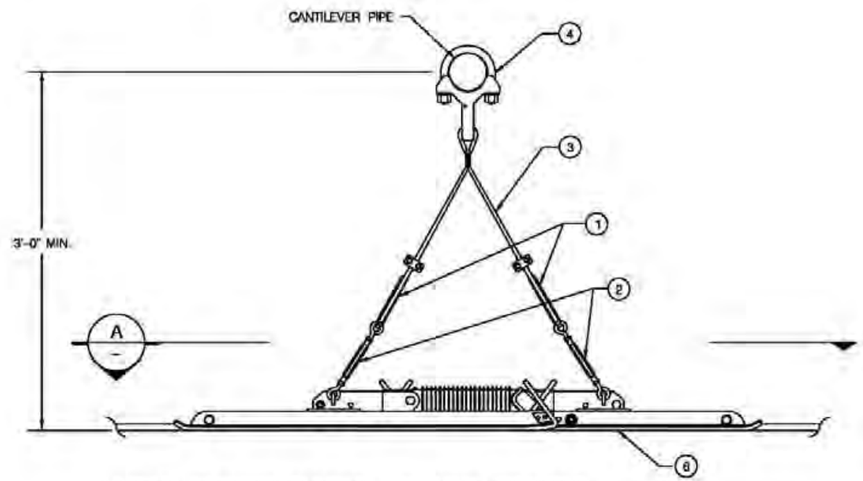

TYPICAL BRIDGING SECTION INSULATOR ASSEMBLY
FOR SINGLE CONTACT WIRE AUTO-TENSIONED SYSTEM
ASSEMBLY SI-1 (SEE NOTES 1 AND 3)

1
–

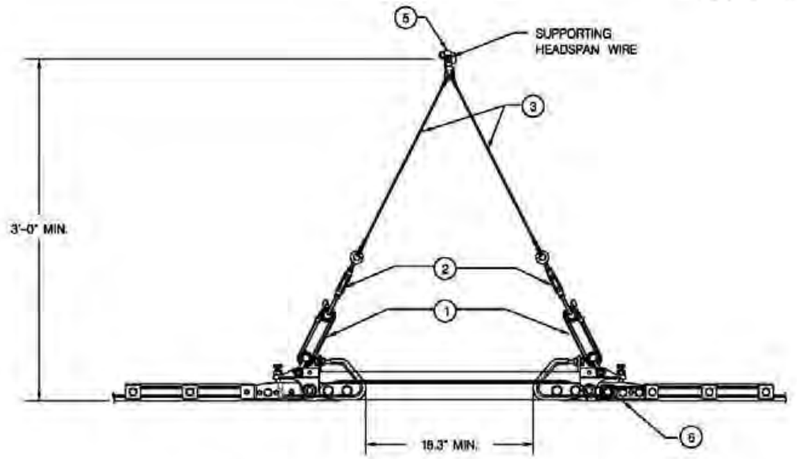

TYPICAL NON-BRIDGING SECTION INSULATOR ASSEMBLY
FOR SINGLE CONTACT FIXED TERMINATION WIRING
SCALE: NTS ASSEMBLY SI-2

2
–

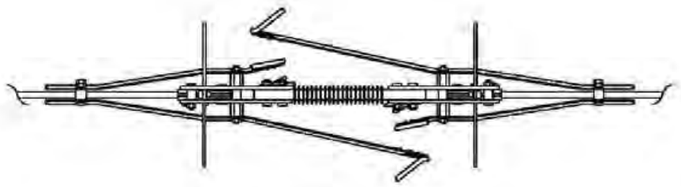

VIEW A
NTS

QUANTITIES EACH TYPE				
–	–	SECTION INSULATOR	6	
–	–	SPAN WIRE CLAMP	5	
–	–	PIPE CLAMP	4	
–	–	HANGER ASSEMBLIES	3	
–	–	TURNBUCKLE	2	
–	–	HANGER INSULATOR	1	
SI-2	SI-1	DESCRIPTION	ITEM NO.	PART NO/ REMARKS
ASSEMBLY TYPE				

BILL OF MATERIALS

DATE	APPR.			
REVISED				
ISSUED:				
		REFERENCE		

RECOMMENDED: _____ DEPUTY CHIEF ENGINEER

APPROVED: _____ CHIEF TRANSPORTATION ENGINEER

D.C. DEPARTMENT OF TRANSPORTATION

STREETCAR STANDARD DRAWINGS

OVERHEAD CONTACT SYSTEM
SECTION INSULATO ASSEMBLIES
TYPES SI

PROJECT ENG.
DESIGNED BY
CHECKED BY
DRAWN BY
PROJECT MGR. CY

DIVISION CHIEF
DATE
FILE
DWG. NO. OCD-24

C:\Users\working\plot\jobs\37312\OCD-24.dgn
4/20/2012

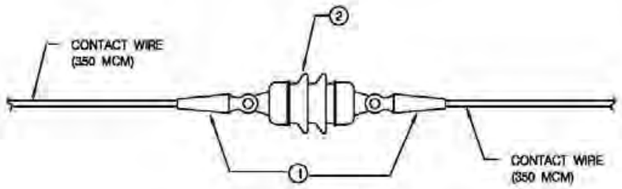

IN-SPAN INSULATION USING CERAMIC INSULATORS (1 / –)
ASSEMBLY IN2C

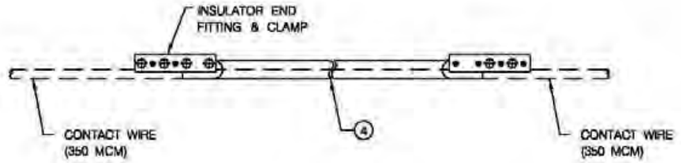

CONTACT WIRE OVERLAP IN-SPAN INSULATION (3 / –)
ASSEMBLY IN3

NOTES:

1. ALL INSULATORS, END CLAMPS AND SPLICES SHALL BE DESIGNED TO ACCOMMODATE THE CONTACT WIRE MAXIMUM TENSIONS TOGETHER WITH APPLICABLE SAFETY FACTORS.
2. FOR CONDUCTOR INFORMATION SEE TECHNICAL INFORMATION DRAWINGS pTD-0062.
3. A SWIVEL LINK MAY BE ADDED BETWEEN THE CONTACT WIRE CLAMPS AND THE INSULATORS TO PREVENT THE OUT OF RUNNING OCS FROM TWISTING.
4. THE BILL OF MATERIALS DETAILS ARE TYPICAL FOR THE ASSEMBLY STYLES SHOWN. THE CONTRACTOR SHALL ITEMIZE THE TABLE WITH DESCRIPTIONS AND PART NUMBERS OF COMPONENTS REQUIRED TO COMPLETE EACH ASSEMBLY.

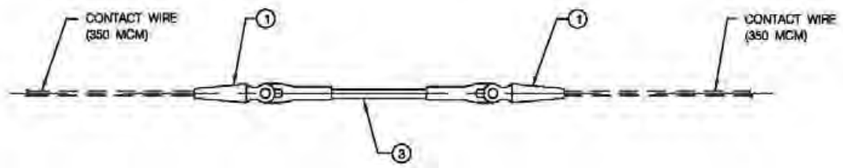

IN-SPAN INSULATION USING GLASS FIBER INSULATION (2 / –)
ASSEMBLY IN2G

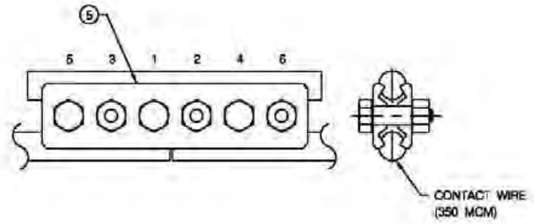

HIGH SPEED CONTACT WIRE SPLICE (4 / –)
ASSEMBLY SP2

QUANTITIES EACH TYPE						
1	–	–	–	CONTACT WIRE SPLICE	5	
–	1	–	–	RUN-ABLE GLASS FIBER SECTION INSULATOR	4	
–	–	1	–	INSULATOR (GLASS FIBER TYPE)	3	
–	–	–	1	INSULATOR (CERMANIC TYPE)	2	
–	–	2	2	CONTACT WIRE END CLAMP	1	
SP2	IN3	IN2G	IN2C		ITEM	PART NO/
ASSEMBLY TYPE				DESCRIPTION	NO.	REMARKS
BILL OF MATERIALS						

D.C. DEPARTMENT OF TRANSPORTATION

STREETCAR STANDARD DRAWINGS

PROJECT ENG.
DESIGNED BY
CHECKED BY
DRAWN BY
PROJECT MGR. CY

RECOMMENDED: Mohamed Khalil
DEPUTY CHIEF ENGINEER

APPROVED:
CHIEF TRANSPORTATION ENGINEER

OVERHEAD CONTACT SYSTEM
CUT-IN INSULATION ASSEMBLIES & SPLICE
TYPES - IN2C, IN2G, IN3 & SP1

DIVISION CHIEF
DATE
FILE
DWG. NO. OCD-25

DATE | APPR.
REVISED
ISSUED:
REFERENCE

c:\pwworking\plit\d0537312\OCD-25.dgn
1/20/2012

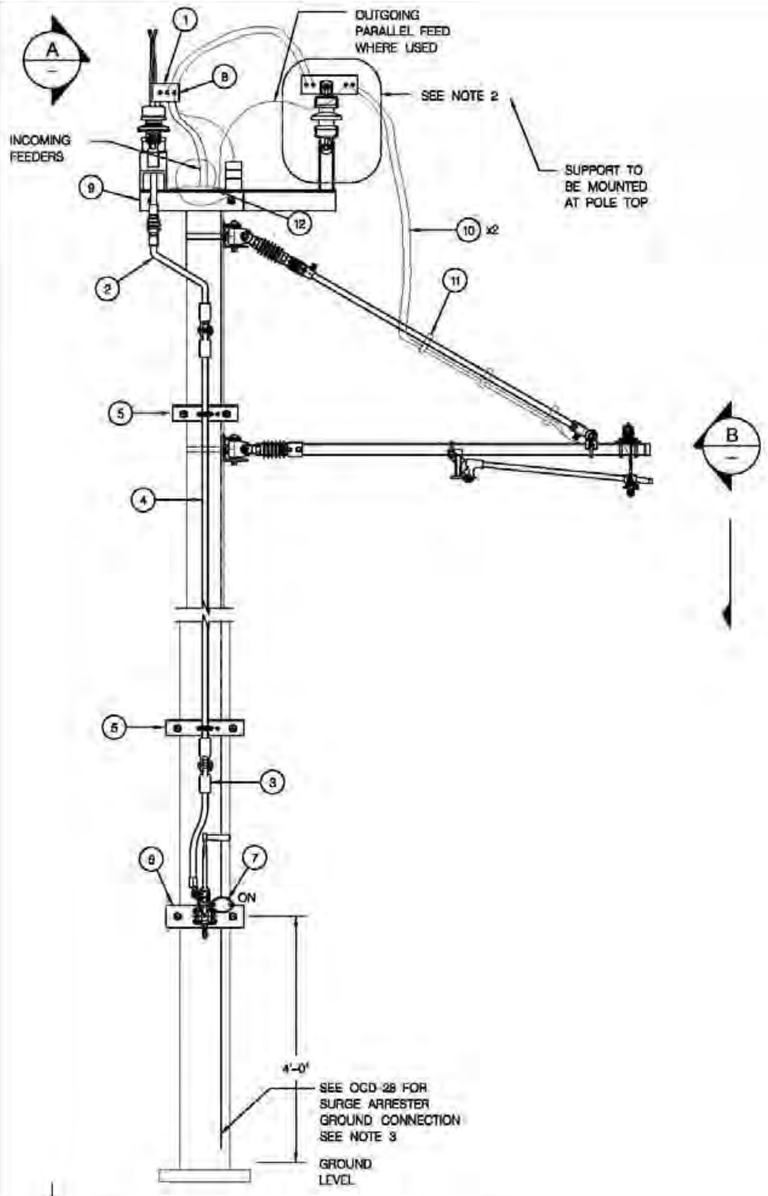

TYPICAL SINGLE DISCONNECT SWITCH FOR TUBULAR POLE (1/–)

ASSEMBLY DS-21

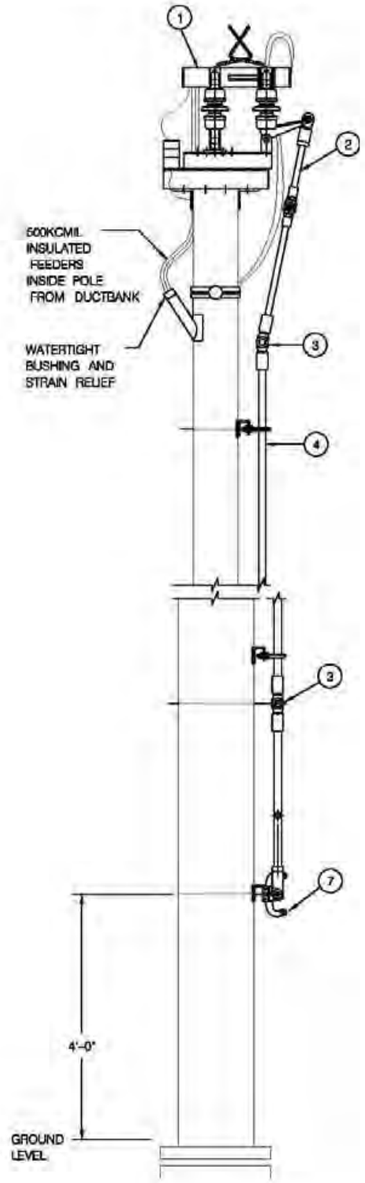

SECTION (A/–)

NOTES:

1. THE BILL OF MATERIALS DETAILS ARE TYPICAL FOR THE ASSEMBLY STYLES SHOWN. THE CONTRACTOR SHALL ITEMIZE THE TABLE WITH DESCRIPTIONS AND PART NUMBERS OF COMPONENTS REQUIRED TO COMPLETE EACH ASSEMBLY.
2. THE CONTRACTOR SHALL INCLUDE CABLE SUPPORTS WHERE CABLE WEIGHT MAY AFFECT SWITCH OPERATION.
3. RUN INSULATED SURGE ARRESTER GROUND WIRE INSIDE POLE, DOWN TO GROUND ROD CONNECTION AT POLE BASE. ALL GROUND CONNECTIONS SHALL BE BY EXOTHERMIC WELD. FOR BORED FOUNDATIONS, SURGE ARRESTER GROUND CABLE IS TO BE CONNECTED TO THE POLE GROUND ROD. FOR AERIAL STRUCTURE MOUNTED POLES, SURGE ARRESTER GROUNDS ARE TO BE CONNECTED TO A SEPARATE GROUND ROD SYSTEM. MAXIMUM TESTED RESISTANCE TO GROUND IS 5 OHMS.

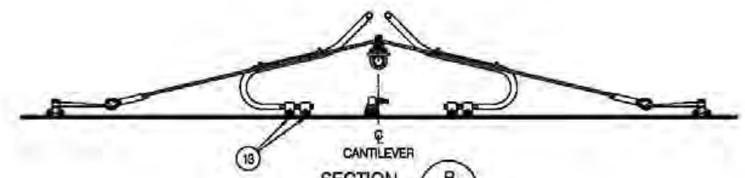

SECTION (B/–)

QUANTITIES EACH TYPE				
–	4	CONTACT WIRE CLAMP	13	
–	1	POLE TOP BUSHING AND STRAIN RELIEF ASSY	12	
–	AS REQ'D	INSULATED CABLE SUPPORT	11	
–	AS REQ'D	FEEDER CABLE, 500KCMIL	10	2KV INSULATED
–	1	SINGLE SWITCH SUPPORT, TUBULAR POLE	9	WITH STRAIN SUPPORT
–	6	CABLE LUGS OR CLAMPS	8	
–	1	OPERATING HANDLE ASSY	7	
–	1	SINGLE HANDLE SUPPORT	6	
–	2	SUPPORT FOR ONE OP PIPE	5	
–	1	OPERATING PIPE	4	
–	2	PIPE LINKAGE	3	
–	1	INSULATED OPERATING PIPE	2	
–	1	SINGLE SWITCH ASSY, 2000 AMP	1	
–	DS-21	DESCRIPTION	ITEM NO.	PART NO./REMARKS
ASSEMBLY TYPE				
BILL OF MATERIALS				

D.C. DEPARTMENT OF TRANSPORTATION

DATE	APPR.		RECOMMENDED: DEPUTY CHIEF ENGINEER	STREETCAR STANDARD DRAWINGS
REVISED				
ISSUED:		REFERENCE	APPROVED: CHIEF TRANSPORTATION ENGINEER	OVERHEAD CONTACT SYSTEM POLE MOUNTED DISCONNECT SWITCH ASSEMBLY TYPE DS-21 & DS-22

PROJECT ENG.
DESIGNED BY
CHECKED BY
DRAWN BY
PROJECT MGR. CY
DIVISION CHIEF
DATE
FILE
DWG. NO. OCD-26

c:\pwworking\plit\d0537312\OCD-26.dgn
1/20/2012

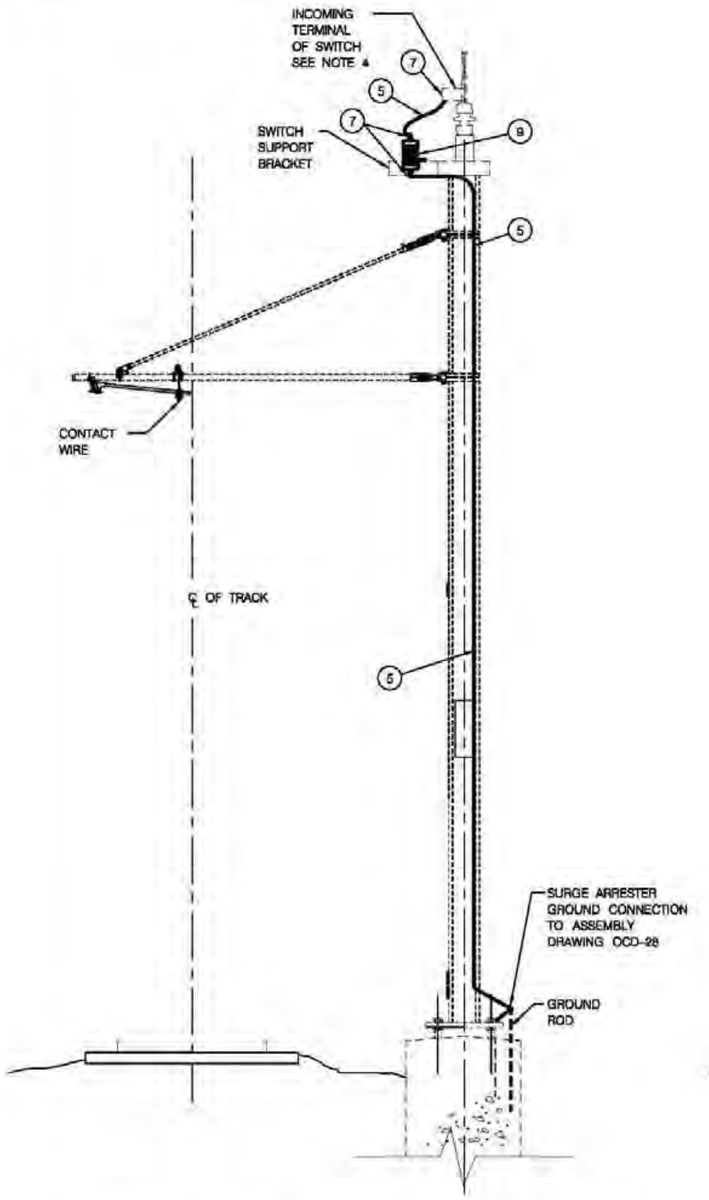

SURGE ARRESTER ASSEMBLIES FOR FEEDERS (1)
ASSEMBLY SA-1 FOR TUBULAR POLE (SIMILAR)

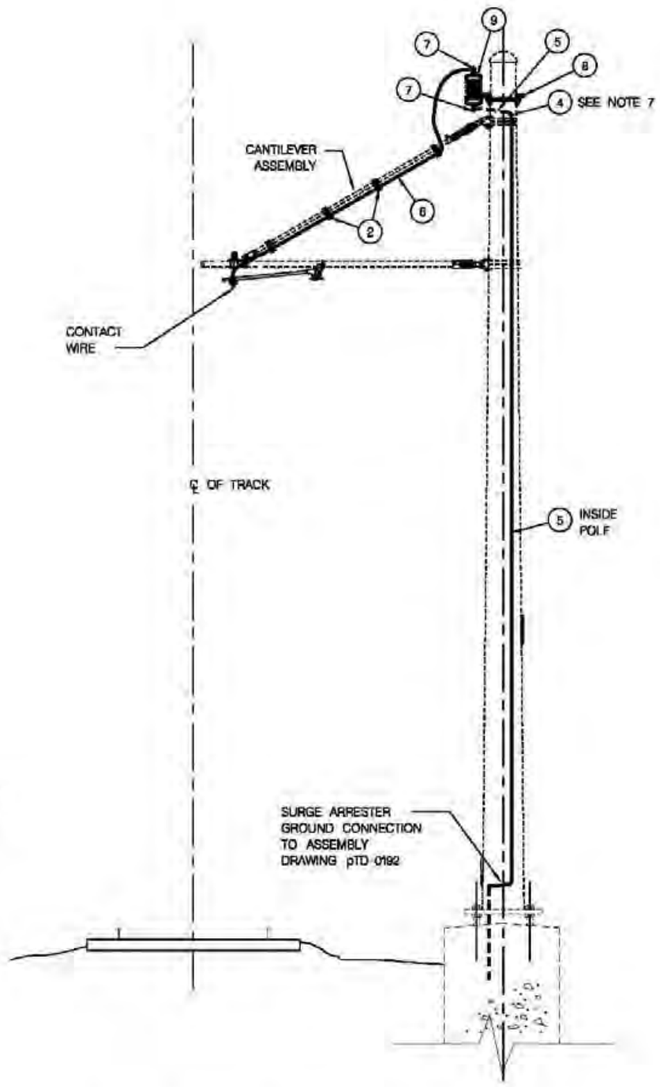

SURGE ARRESTER ASSEMBLIES FOR CONTACT (2)
ASSEMBLY SA-2 FOR TUBULAR POLE (AS SHOWN)

NOTES:

1. THE SURGE ARRESTER SHALL BE MOUNTED TO PERMIT THE POSITIVE AND GROUND CABLES TO TAKE THE MOST DIRECT ROUTE TO GROUND.
2. CABLE BENDS SHALL EXCEED 8" RADIUS.
3. INSTALLATION AND TESTING OF GROUND RODS SHALL BE IN ACCORDANCE WITH THE SPECIFICATION REACHING A TESTED RESISTANCE OF 5 OHMS OR LESS. ADDITIONAL GROUND RODS AND CONNECTIONS TO BE INSTALLED TO REACH THIS TEST CONDITION. REFER TO OCS TESTING SPECIFICATION.
4. THE POSITIVE CONNECTION CABLE SHALL BE CONNECTED TO THE SAME SWITCH TERMINAL AS THE INCOMING FEEDER CABLES FROM THE SUBSTATION.
5. THE POLE FOUNDATION, WITH INTEGRAL GROUND ROD ASSEMBLY, WILL BE CALLED OFF SEPARATELY ON THE OCS FOUNDATION SCHEDULES.
6. THE BILL OF MATERIALS DETAILS ARE TYPICAL FOR THE ASSEMBLY STYLES SHOWN. THE CONTRACTOR SHALL ITEMIZE THE TABLE WITH DESCRIPTIONS AND PART NUMBERS OF COMPONENTS REQUIRED TO COMPLETE EACH ASSEMBLY.
7. GROUND CABLE ENTRY HOLE IN TUBULAR POLE TO BE DRILLED. GROUND ROD CONNECTION TO BE MADE PRIOR TO FINAL ERECTION OF TUBULAR POLE.

QUANTITIES EACH TYPE				
1	1	CABLE LUG, 4/0 AWG	7	
1	1	SURGE ARRESTER SUPPORT BRKT	6	
2	3	CABLE LUG, 4/0 AWG	5	
AS REQ'D	AS REQ'D	CABLE, 4/0 AWG 2000V INSULATED	4	
AS REQ'D	AS REQ'D	WIRE, 4/0 AWG BARE	3	
1	2	CABLE SUPPORT AND POLE SEAL	2	
4 TYP	–	INSULATED CABLE SUPPORT	1	
SA-2	SA-1		ITEM	PART NO./
ASSEMBLY TYPE		DESCRIPTION	NO.	REMARKS
BILL OF MATERIALS				

DATE	APPR.	
REVISED		
ISSUED:		
		REFERENCE

RECOMMENDED: Mohammad Khalil
DEPUTY CHIEF ENGINEER

APPROVED:
CHIEF TRANSPORTATION ENGINEER

D.C. DEPARTMENT OF TRANSPORTATION

STREETCAR STANDARD DRAWINGS

OVERHEAD CONTACT SYSTEM
SURGE ARRESTER ASSEMBLIES
TYPES SA

PROJECT ENG.
DESIGNED BY
CHECKED BY
DRAWN BY
PROJECT MGR. CY

DIVISION CHIEF
DATE
FILE
DWG. NO. OCD-27

c:\pwworking\pit1\d0537315\OCD-27.dgn
5/29/2012

NOTES:

1. GROUND CONNECTION CABLES IN TUBULAR POLES TO BE WELDED TO THE GROUND ROD PRIOR TO FINAL ERECTION OF THE POLE.
2. BENDS IN SURGE ARRESTER WIRE TO BE NO LESS THAN 8" RADIUS.

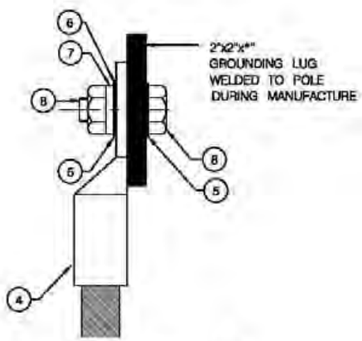

POLE CONNECTION (A / –)

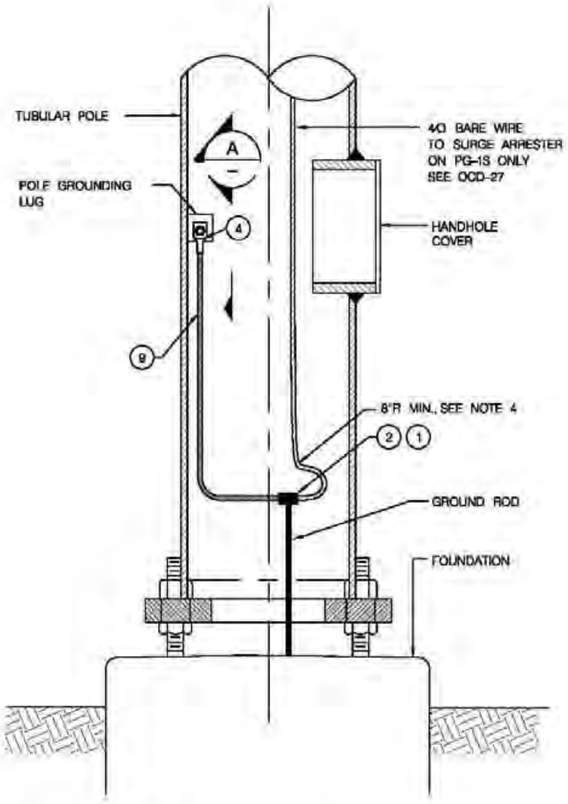

POLE GROUND CONNECTIONS FOR TUBULAR POLES (1 / –)
(SECTION THROUGH POLE SHOWN)
ASSEMBLY PG-1 FOR GROUNDING POLE ONLY
ASSEMBLY PG-1S FOR GROUNDING POLE AND SURGE ARRESTER

QUANTITIES EACH TYPE				
3 FT (TYP)	3 FT (TYP)	COPPRE CONNECTOR, 4/0 AWG BARE	8	–
1	1	BOLT HEX 1/2", 1-1/2" LONG	7	–
1	1	SPRING LOCK WASHER	6	–
2	2	FLAT WASHER	5	–
1	1	NUT, HEX 1/2"	4	–
1	1	COMPRESSION CABLE LUG	3	–
–	1	CADWELD	2	–
1	–	CADWELD	1	–
PG-1S	PG-1		ITEM	PART NO./
ASSEMBLY TYPE		DESCRIPTION	NO.	REMARKS
BILL OF MATERIALS				

D.C. DEPARTMENT OF TRANSPORTATION

DATE	APPR.	
REVISED		
ISSUED:		REFERENCE

RECOMMENDED: DEPUTY CHIEF ENGINEER

APPROVED: CHIEF TRANSPORTATION ENGINEER

STREETCAR STANDARD DRAWINGS

OVERHEAD CONTACT SYSTEM
FOUNDATION AND POLE GROUND
CONNECTION ASSEMBLY
PG TYPES

PROJECT ENG.
DESIGNED BY
CHECKED BY
DRAWN BY
PROJECT MGR. CY
DIVISION CHIEF
DATE
FILE
DWG. NO. OCD-28

c:\pwworking\plit\d0537312\OCD-28.dgn
1/20/2012

NOTES:

1. DETAILS OF BUILDING ATTACHMENTS FOR TENSION REDUCERS AND SHOP DOOR ARRANGEMENTS TO BE COORDINATED WITH SHOP BUILDING CONTRACTOR.
2. TENSION REDUCER TO BE USED AT THE INSIDE AND OUTSIDE OF THE SHOP DOORS.
3. MAXIMUM TENSION IN THE CONTACT WIRE IS AS FOLLOWS:
   YARD & SHOP AREA – 4477 LB
4. NOMINAL CONTACT WIRE HEIGHT IS 19'.
5. 350KCMIL INSULATED FEEDER CABLES TO BE CONNECTED BETWEEN DISCONNECT SWITCH AND CONTACT WIRE ON INSIDE AND OUTSIDE OF SHOP DOORS.

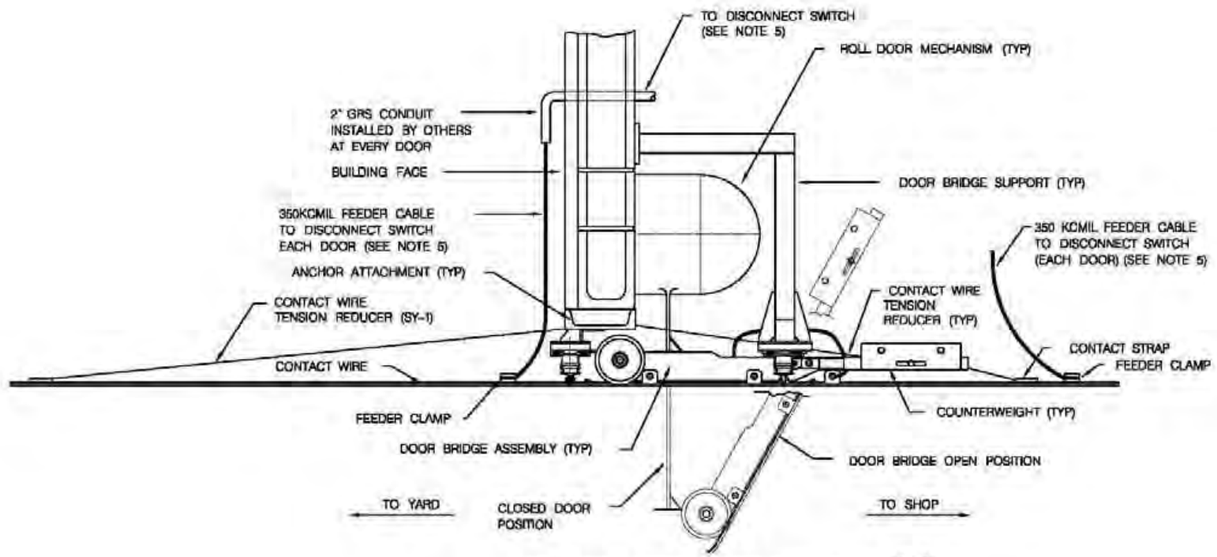

SHOP DOOR BRIDGE ASSEMBLY SD-1 (1/–)

D.C. DEPARTMENT OF TRANSPORTATION

			RECOMMENDED: Mohammad Khalil, DEPUTY CHIEF ENGINEER	STREETCAR STANDARD DRAWINGS
DATE	APPR.		APPROVED: CHIEF TRANSPORTATION ENGINEER	OVERHEAD CONTACT SYSTEM SHOP DOOR BRIDGE ASSEMBLY TYPE SD-1
ISSUED:	REVISED	REFERENCE		

PROJECT ENG.
DESIGNED BY:
CHECKED BY:
DRAWN BY:
PROJECT MGR. CY
DIVISION CHIEF:
DATE:
FILE:
DWG. NO. OCD-25

c:\projects\dwg\11\40537\15\OCD-25.dgn 5/23/2011

QUANTITIES EACH TYPE				
8	4	LOOP INSULATOR	7	
32	16	SLEEVE	6	
32	16	THIMBLE	5	
2	1	CONTACT WIRE STRAP	4	
AS REQ'D	AS REQ'D	STAINLESS STEEL CABLE 5/16" DIA.	3	
8	4	PARALLEL GROOVE CLAMP	2	
4	2	TURNBUCKLE	1	
SY-2	SY-1		ITEM	PART NO./
ASSEMBLY TYPE		DESCRIPTION	NO.	REMARKS
BILL OF MATERIALS				

NOTES:

1. DETAILS OF BUILDING ATTACHMENTS FOR TENSION REDUCERS AND SHOP DOOR ARRANGEMENTS TO BE COORDINATED WITH SHOP BUILDING CONTRACTOR.
2. TENSION REDUCER TO BE USED AT THE INSIDE AND OUTSIDE OF THE SHOP DOORS. COORDINATE ATTACHMENT METHOD WITH SHOP DESIGNER.
3. MAXIMUM TENSION IN THE CONTACT WIRE IS AS FOLLOWS:

   YARD & SHOP AREA – 4477 LB.
4. NOMINAL CONTACT WIRE HEIGHT IS 19.0' IN THE YARD.
5. 350KCMIL INSULATED FEEDER CABLES TO BE CONNECTED BETWEEN DISCONNECT SWITCH AND CONTACT WIRE ON INSIDE AND OUTSIDE OF SHOP DOORS.
6. THE BILL OF MATERIALS DETAILS ARE TYPICAL FOR THE ASSEMBLY STYLES SHOWN. THE CONTRACTOR SHALL ITEMIZE THE TABLE WITH DESCRIPTIONS AND PART NUMBERS OF COMPONENETS REQUIRED TO COMPLETE EACH ASSEMBLY.

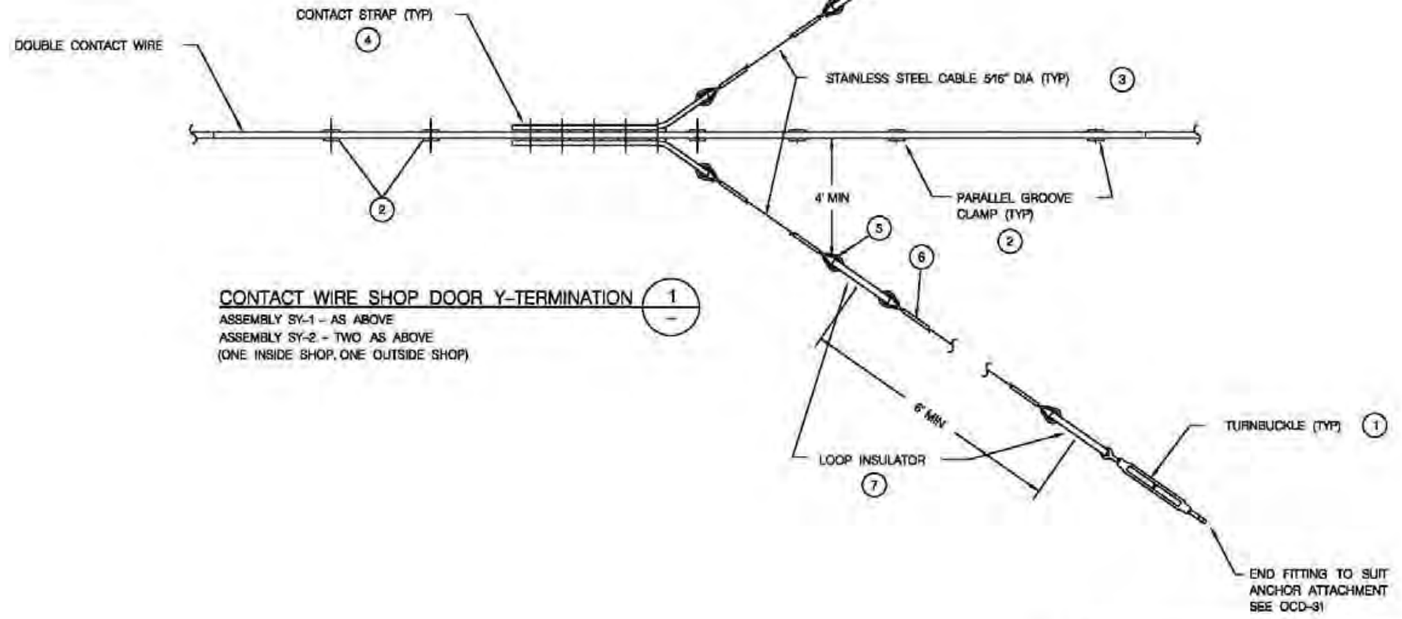

CONTACT WIRE SHOP DOOR Y-TERMINATION 1

ASSEMBLY SY-1 – AS ABOVE
ASSEMBLY SY-2 – TWO AS ABOVE
(ONE INSIDE SHOP, ONE OUTSIDE SHOP)

D.C. DEPARTMENT OF TRANSPORTATION

			RECOMMENDED: DEPUTY CHIEF ENGINEER	STREETCAR STANDARD DRAWINGS
DATE	APPR.		APPROVED: CHIEF TRANSPORTATION ENGINEER	OVERHEAD CONTACT SYSTEM SHOP DOOR WIRE TERMINATION ASSEMBLIES TYPES SY-1, & SY-2
REVISED				
ISSUED:		REFERENCE		

PROJECT ENG.
DESIGNED BY
CHECKED BY
DRAWN BY
PROJECT MGR. CY
DIVISION CHIEF
DATE
FILE
DWG. NO. OCD-30

c:\users\kbg\pw\pwtemp\pw_1\d0537315\OCD-30.dgn
1/20/2021

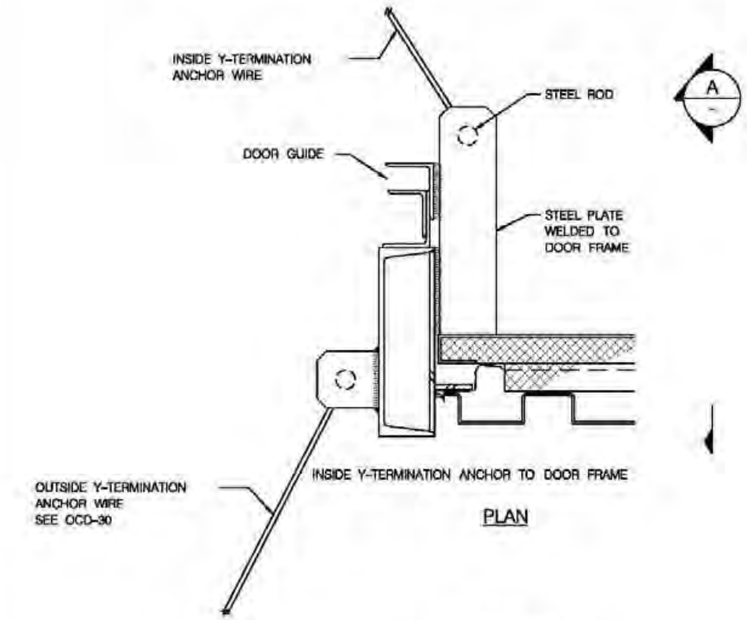

PLAN

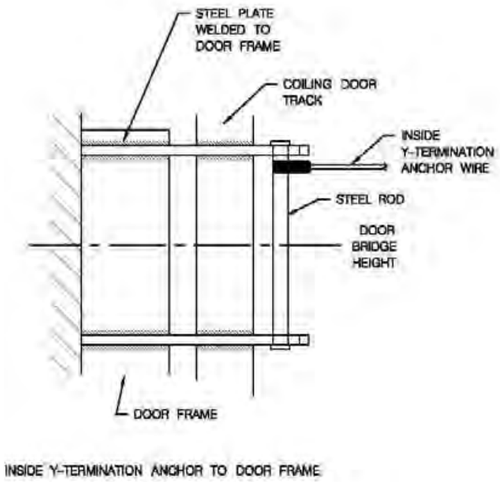

SECTION A
SCALE: NTS

NOTES:

1. ANCHORING ARRANGEMENT SHOWN ARE THE SAME FOR THE OPPOSITE SIDE OF THE DOOR FRAME
2. THE CONTACTOR SHALL DESIGN THE Y-TERMINATION ANCHOR BRACKETS BASED ON THE OCS LOADS.

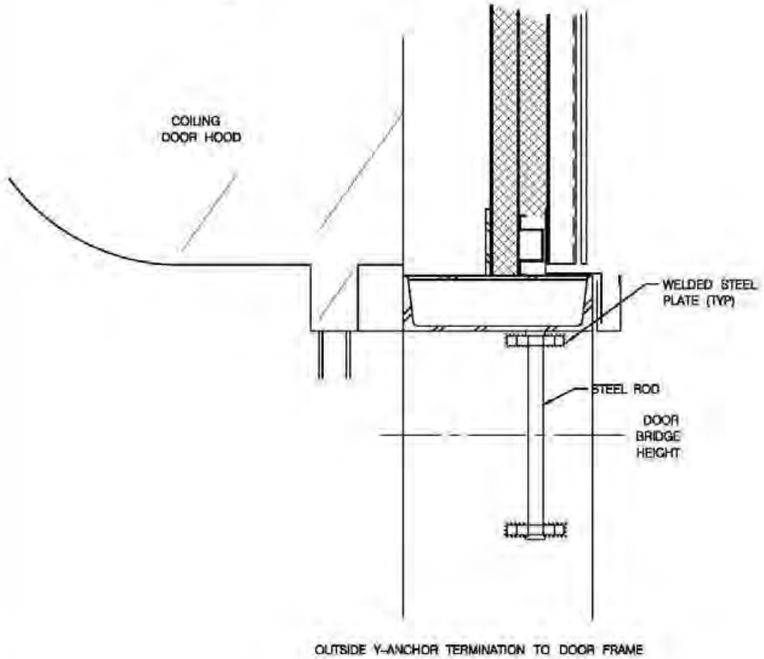

DETAIL 1
SCALE: NTS

DATE	APPR.		RECOMMENDED: Mohammed Khalid DEPUTY CHIEF ENGINEER	D.C. DEPARTMENT OF TRANSPORTATION
REVISED				STREETCAR STANDARD DRAWINGS
ISSUED:		REFERENCE	APPROVED: CHIEF TRANSPORTATION ENGINEER	OVERHEAD CONTACT SYSTEM TYPICAL SHOP DOOR WIRE TERMINATION BRACKETS

PROJECT ENG.
DESIGNED BY
CHECKED BY
DRAWN BY
PROJECT MGR. CY
DIVISION CHIEF
DATE
FILE
DWG. NO. OCD-31

c:\pwworking\plit\d0537312\OCD-31.dgn
1/20/2012

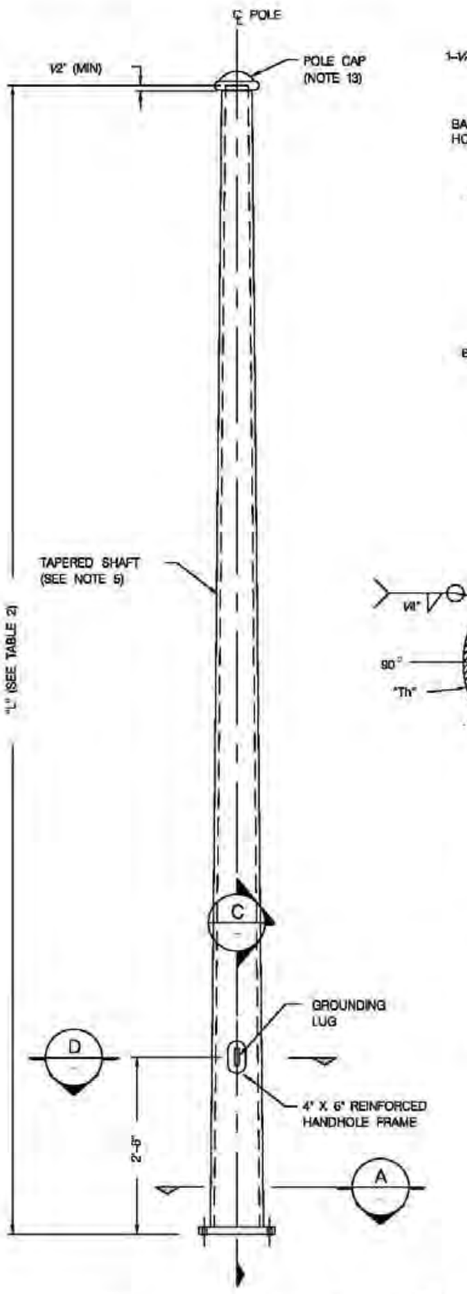

TYPICAL TAPERED TUBULAR POLE 1
NTS

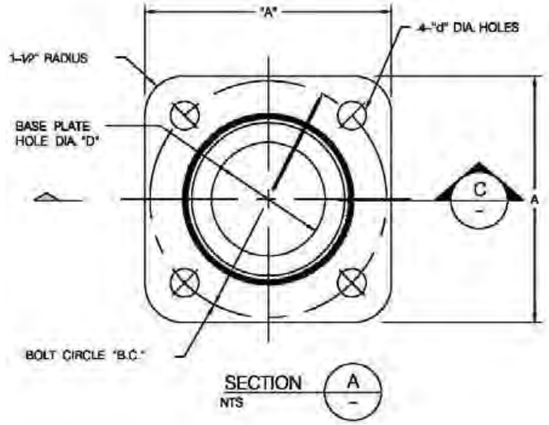

SECTION A
NTS

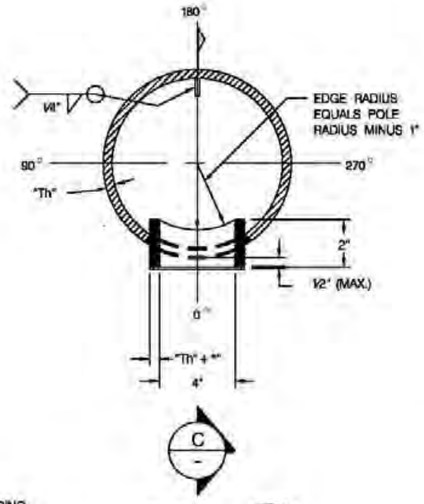

SECTION D
NTS

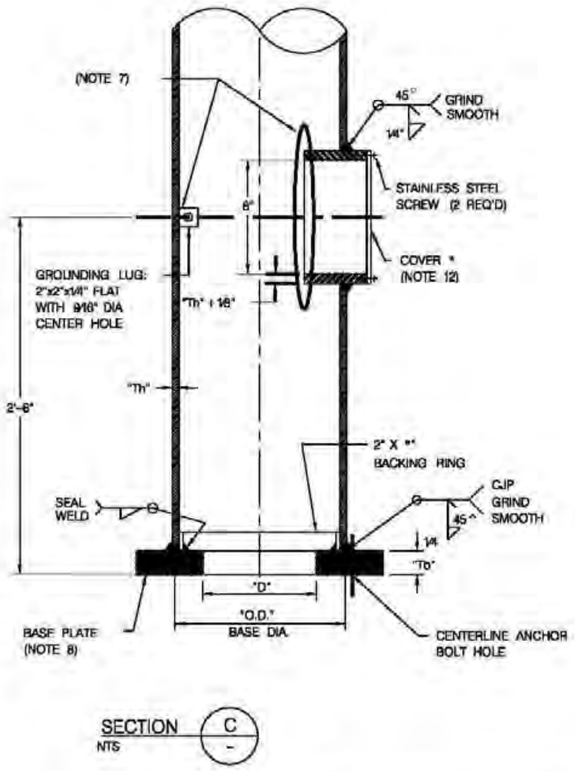

SECTION C
NTS

TABLE 1: DIMENSIONS COMMON TO POLES IN SERIES NUMBERS COMMENCING WITH 'PS' AND 'PF'

POLE SERIES NUMBER	POLE SHAFT		BASE PLATE				
	O.D. (INCHES)	Th (INCHES)	d (INCHES)	A (INCHES)	D (INCHES)	B.C. (INCHES)	Tb (INCHES)
PS1, PF1	10"	0.2391"	1.75"	15.5"	8"	15"	1.75"
PS3, PF3	14"	0.3125"	2.25"	20.5"	10"	20"	2.25"

TABLE 2: DIMENSIONS FOR 'PS' SERIES POLES

POLE SERIES NUMBER	POLE TYPE NUMBER	LENGTH L (FT-IN)
PS1	PS1-24	24'-0"
PS1	PS1-27	27'-0"
PS3	PS3-27	27'-0"
PS3	PS3-29	29'-0"
PS3	PS3-34	34'-0"

NOTES:

1. THE FABRICATION OF POLE ASSEMBLY SHALL BE IN CONFORMANCE WITH THE REQUIREMENTS OF THE AISC MANUAL OF STEEL CONSTRUCTION AND CODE OF STANDARD PRACTICE FOR STEEL BUILDINGS AND BRIDGES LATEST EDITION.
2. POLE STEEL SHALL BE ASTM A595 GRADE 55 (FY = 55 KSI). THE POLE MINIMUM THICKNESS SHALL BE 3 GAGE (0.2391")
3. BASE PLATE STEEL SHALL CONFORM TO ASTM A572 GRADE 42 STEEL WITH A MINIMUM YIELD STRENGTH, FY = 42 KSI.
4. MISCELLANEOUS STRUCTURAL STEEL SHALL CONFORM TO ASTM A36 WITH A MINIMUM YIELD STRENGTH (FY) OF 36 KSI. ROUND OFF INSIDE EDGES.
5. POLE SHALL HAVE A UNIFORM TAPER OF APPROXIMATELY 0.14" OF DIAMETER CHANGE PER FOOT OF LENGTH.
6. WELDING SHALL BE IN CONFORMANCE WITH THE AWS D1.1 SPECIFICATIONS LATEST EDITION USING E70XX WELDING ELECTRODES.
7. ROUND OFF INSIDE EDGES AND REMOVE ALL BURRS TO PREVENT DAMAGE TO CABLES DURING INSTALLATION INSIDE POLE.
8. THE BASEPLATE IS SHALL BE PREHEATED BEFORE WELDING OF POLE SHAFT TO BASEPLATE.
9. POLE ASSEMBLY TO BE HOT-DIP GALVANIZED IN ACCORDANCE WITH ASTM 123, THEN FACTORY PAINTED WITH PRIMER.
10. POLES ARE TO BE DESIGNED IN ACCORDANCE WITH NATIONAL ELECTRICAL SAFETY CODE (IEEE C2-2002), AND ASCE-72, DESIGN OF STEEL TRANSMISSION POLE STRUCTURES.
11. ALL POLES SHALL HAVE POLE TYPE IDENTIFIER STAMPED ON POLE BASE AS REQUIRED IN SPECIFICATIONS.
12. HANDHOLE SHALL BE COVERED WITH A MINIMUM OF 7 GA. PLATE BY FASTENING WITH 2-3/16" DIA. STAINLESS STEEL SET SCREWS.
13. POLE CAP SHALL BE REMOVABLE DOMED HOT-DIPPED GALVANIZED STEEL CAP FASTENED TO POLE USING 3/16" DIA. STAINLESS STEEL SET SCREW (3 REQUIRED).

			RECOMMENDED: Muhammad Khalil DEPUTY CHIEF ENGINEER	D.C. DEPARTMENT OF TRANSPORTATION
DATE	APPR.		APPROVED: CHIEF TRANSPORTATION ENGINEER	STREETCAR STANDARD DRAWINGS
REVISED				OVERHEAD CONTACT SYSTEM TAPERED TUBULAR POLE ASSEMBLY PS AND PF TYPES
ISSUED:		REFERENCE		

PROJECT ENG. | DESIGNED BY | CHECKED BY | DRAWN BY | PROJECT MGR. CV | DIVISION CHIEF | DATE | FILE | DWG. NO. OCD-32

c:\pwworking\pitt\d0537312\OCD-32.dgn
12/9/2012

TABLE 3: DIMENSIONS FOR 'PF' SERIES POLES

POLE SERIES NUMBER	POLE TYPE NUMBER	LENGTH L (FT-IN)	SPOUT HEIGHT S (FT-IN)
PF1	PF1-27	27'-0"	22'-0"
PF3	PF3-27	27'-0"	24'-0"

NOTES:

1. GENERAL AND WELDING NOTES 1 TO 13 ON DRAWING OCT-01 SHALL APPLY TO THIS DRAWING.
2. FOR VALUES OF DIMENSIONS "Th", SEE DRAWING OCD-32.

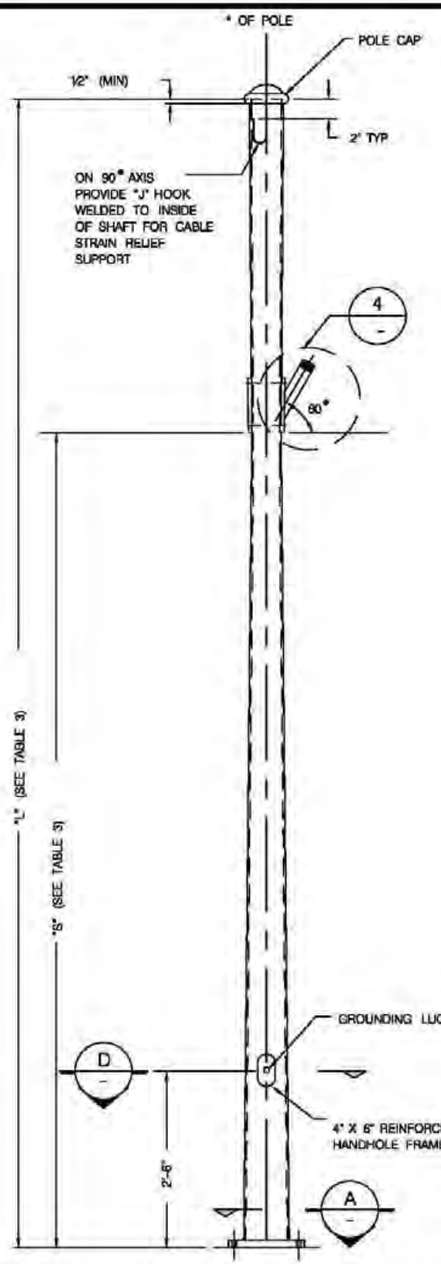

TYPICAL TAPERED TUBULAR FEEDER POLE (1)
NTS

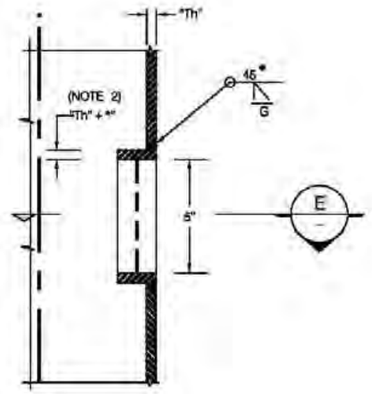

DETAIL (2)
NTS

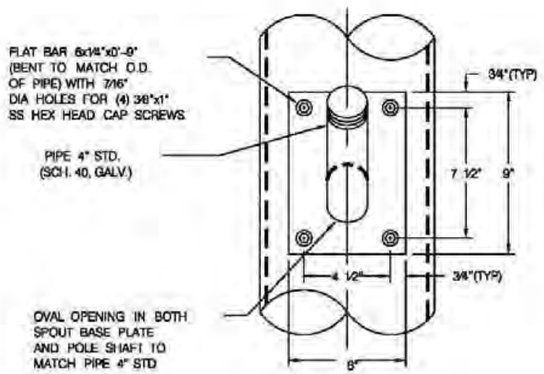

DETAIL (3)
NTS

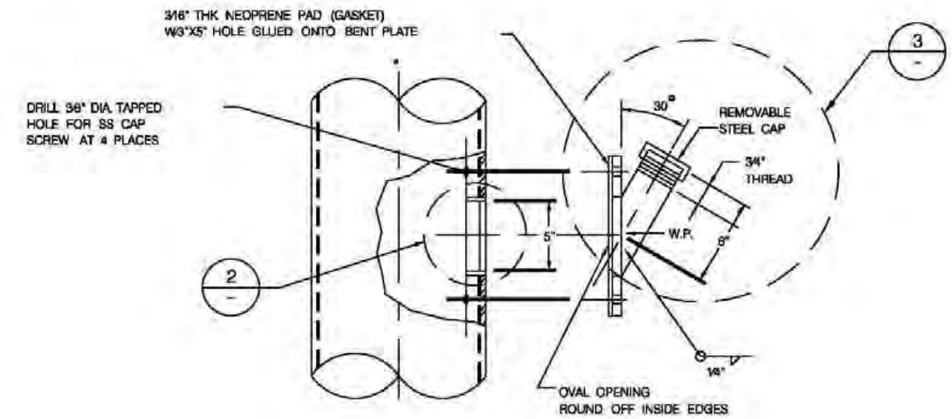

DETAIL (4)
NTS

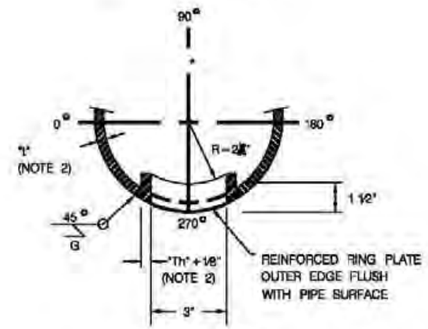

SECTION (E)
NTS

D.C. DEPARTMENT OF TRANSPORTATION

DATE	APPR.		RECOMMENDED: Muhammad Khalid DEPUTY CHIEF ENGINEER	STREETCAR STANDARD DRAWINGS
REVISED				
ISSUED:		REFERENCE	APPROVED: CHIEF TRANSPORTATION ENGINEER	OVERHEAD CONTACT SYSTEM TAPERED TUBULAR FEEDER POLE ASSEMBLY PF TYPES

PROJECT ENG.
DESIGNED BY
CHECKED BY
DRAWN BY
PROJECT MGR. CY
DIVISION CHIEF
DATE
FILE
DWG. NO. OCD-33

c:\pwworking\pl1\d0537312\OCD-33.dgn
1/20/2012

TABLE 1: DIMENSIONS FOR 'PB' SERIES POLES

POLE TYPE NUMBER	LENGTH L (FT-IN)	POLE SHAFT		BASE PLATE			
		O.D. (INCHES)	th (INCHES)	d (INCHES)	A (INCHES)	B.C. (INCHES)	tb (INCHES)
PB4-27	27'-0"	14"	0.3125"	2.25"	20.5"	20"	2.25"

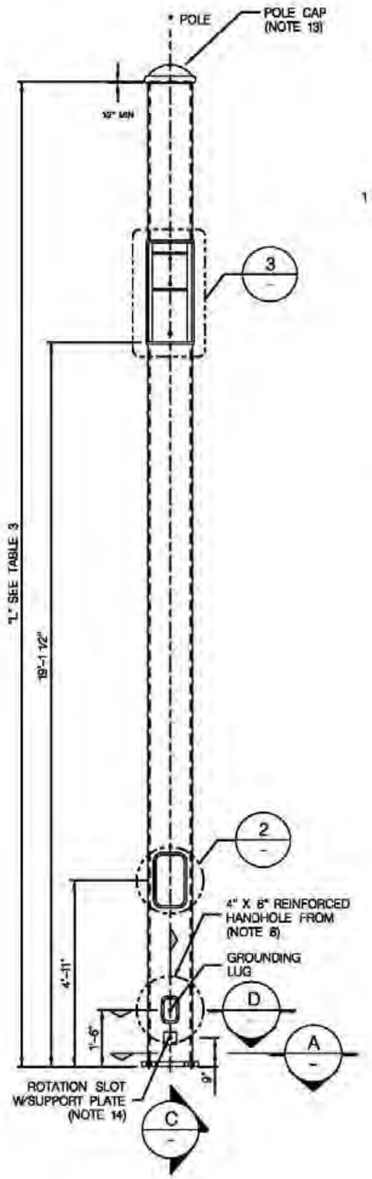

BALANCE WEIGHT
PULLEY OPENING DETAIL 1
NTS

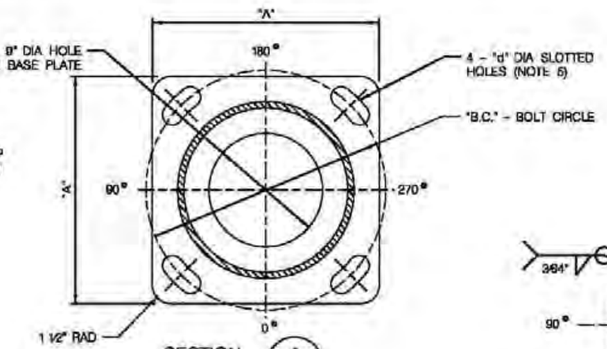

SECTION A
NTS

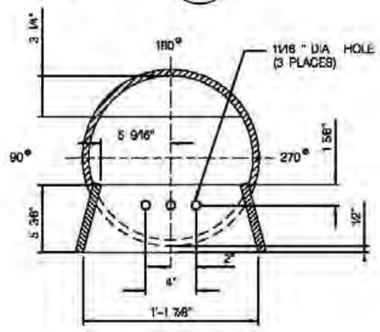

SECTION B
NTS

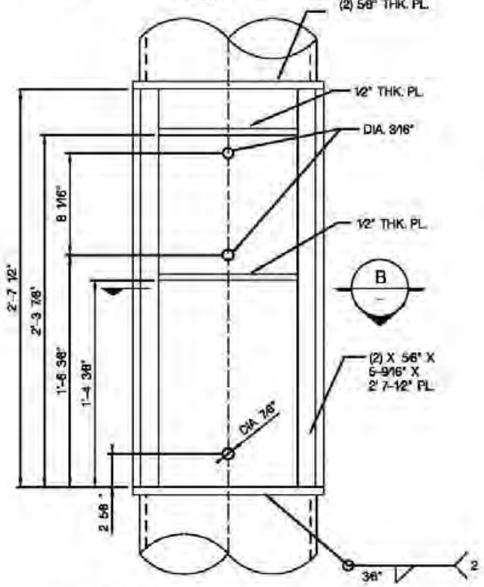

BALANCE WEIGHT
PULLEY OPENING DETAIL 3
NTS

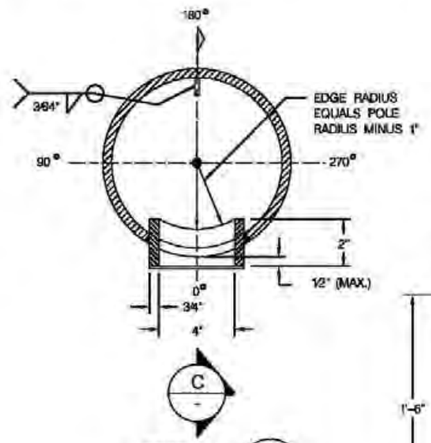

SECTION D
NTS

BALANCE WEIGHT
ROD OPENING DETAIL 2
NTS

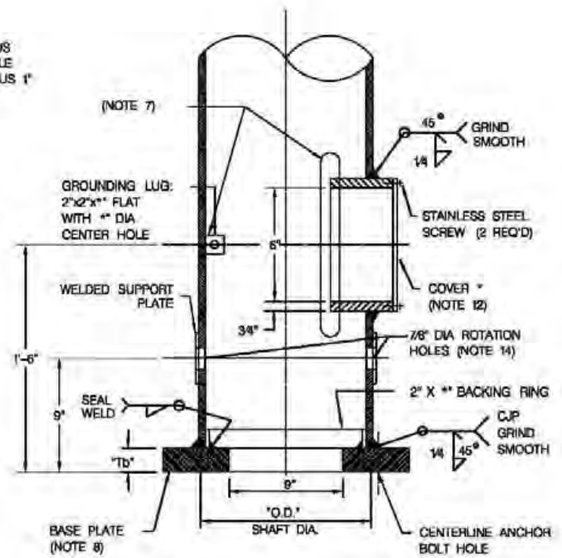

SECTION C
NTS

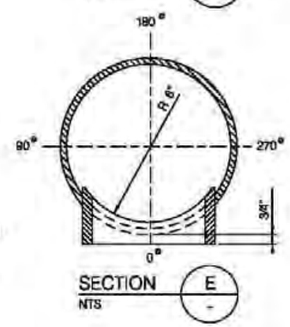

SECTION E
NTS

NOTES:

1. THE FABRICATION OF POLE ASSEMBLY SHALL BE IN CONFORMANCE WITH THE REQUIREMENTS OF THE AISC MANUAL OF STEEL CONSTRUCTION AND CODE OF STANDARD PRACTICE FOR STEEL BUILDINGS AND BRIDGES LATEST EDITION.
2. POLE STEEL SHALL BE ASTM A595 GRADE 55 (FY = 55 KSI). THE POLE MINIMUM THICKNESS SHALL BE 3 GAGE (0.2391")
3. BASE PLATE STEEL SHALL CONFORM TO ASTM A572 GRADE 42 STEEL WITH A MINIMUM YIELD STRENGTH, FY = 42 KSI.
4. MISCELLANEOUS STRUCTURAL STEEL SHALL CONFORM TO ASTM A36 WITH A MINIMUM YIELD STRENGTH (FY) OF 36 KSI. ROUND OFF INSIDE EDGES.
5. THE BASEPLATE SLOTS SHOULD BE SLOTTED RADIALLY FOR A TOTAL OF 12 DEGREES OF ROTATION OF THE POLE ON ITS FOUNDATION BOLTS.
6. WELDING SHALL BE IN CONFORMANCE WITH THE AWS D1.1 SPECIFICATIONS LATEST EDITION USING E70XX WELDING ELECTRODES.
7. ROUND OFF INSIDE EDGES AND REMOVE ALL BURRS TO PREVENT DAMAGE TO CABLES DURING INSTALLATION INSIDE POLE.
8. THE BASEPLATE IS SHALL BE PREHEATED BEFORE WELDING OF POLE SHAFT TO BASEPLATE.
9. POLE ASSEMBLY TO BE HOT-DIP GALVANIZED IN ACCORDANCE WITH ASTM 123, THEN FACTORY PAINTED WITH PRIMER.
10. POLES ARE TO BE DESIGNED IN ACCORDANCE WITH NATIONAL ELECTRICAL SAFETY CODE (IECE C2-2002), AND ASCE-72, DESIGN OF STEEL TRANSMISSION POLE STRUCTURES.
11. ALL POLES SHALL HAVE POLE TYPE IDENTIFIER STAMPED ON POLE BASE AS REQUIRED IN SPECIFICATIONS.
12. HANDHOLES SHALL BE COVERED WITH A MINIMUM OF 7 GA. PLATE BY FASTENING WITH 2-** DIA. STAINLESS STEEL SET SCREWS.
13. POLE CAP SHALL BE REMOVABLE DOMED HOT-DIPPED GALVANIZED STEEL CAP FASTENED TO POLE USING ** DIA. STAINLESS STEEL SET SCREW (3 REQUIRED).
14. THE ROTATION HOLES ARE FOR ERECTION USE. THEY WILL BE USED WITH A ** DIA. ROD AS A LEVER, TO ROTATE THE POLE ON ITS FOUNDATION ANCHOR BOLTS, TO ALIGN THE BALANCE WEIGHT ASSEMBLY WITH THE LINE OF WIRE PULL.

			RECOMMENDED: DEPUTY CHIEF ENGINEER	D.C. DEPARTMENT OF TRANSPORTATION
DATE	APPR.		APPROVED: CHIEF TRANSPORTATION ENGINEER	STREETCAR STANDARD DRAWINGS
REVISED				OVERHEAD CONTACT SYSTEM TUBULAR BALANCE WEIGHT ANCHOR POLE ASSEMBLY PB4 TYPES
ISSUED:		REFERENCE		

PROJECT ENG. — DESIGNED BY — CHECKED BY — DRAWN BY — PROJECT MGR. — QY
DIVISION CHIEF — DATE — FILE — DWG. NO. OCD-34

c:\pwworking\plit\d0537315\OCD-34.dgn
4/29/2015