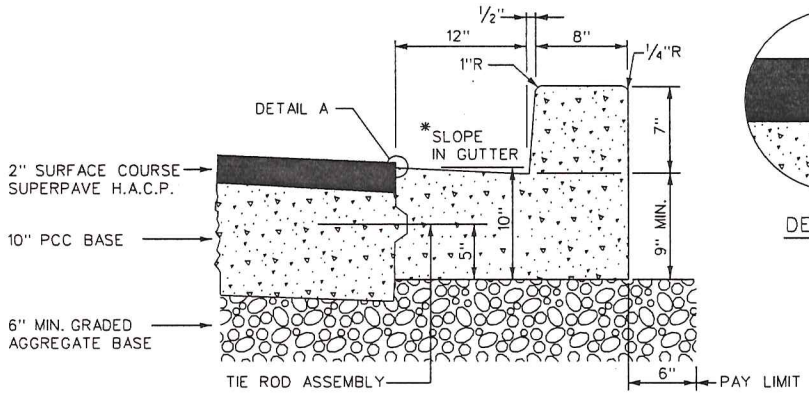


PCC CURB AND GUTTER
WITH COMPOSITE PAVEMENT

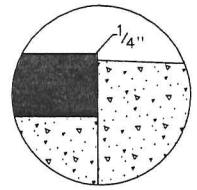


DETAIL "A"

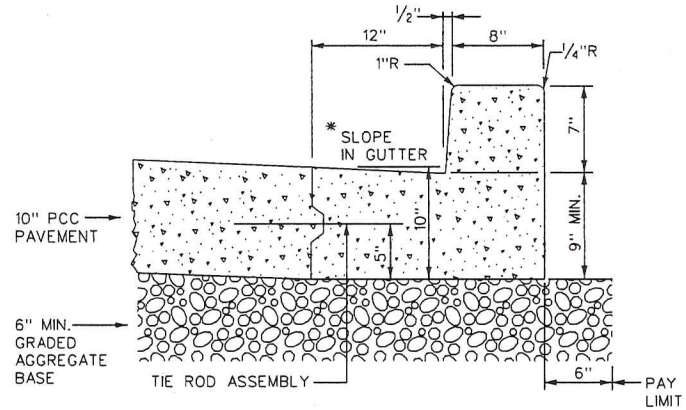


PCC CURB AND GUTTER
WITH CONCRETE PAVEMENT

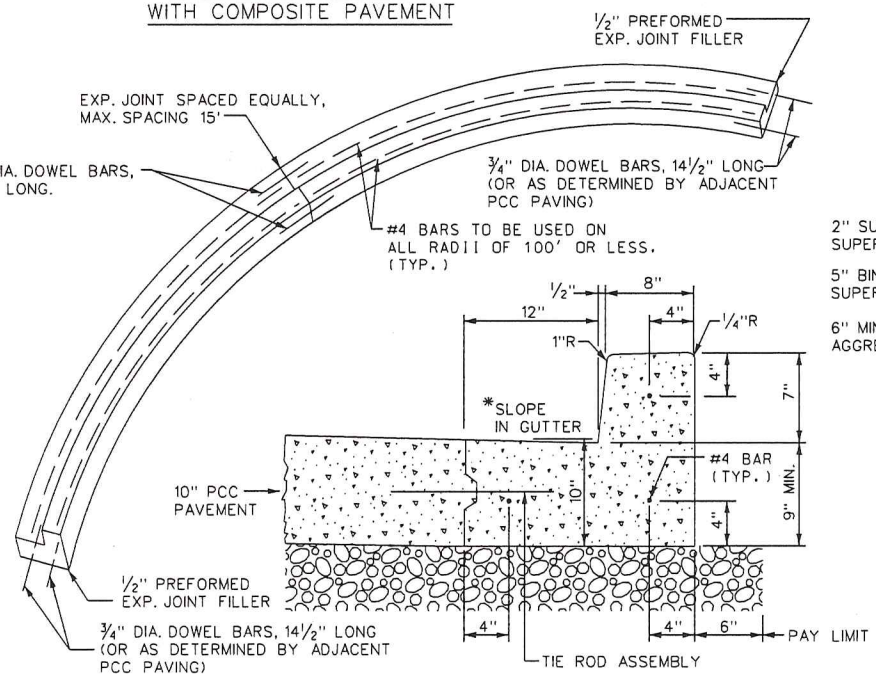


CIRCULAR REINFORCED PCC CURB AND GUTTER, RADII = 100' OR LESS

(SHOWN WITH CONCRETE PAVEMENT SECTION)

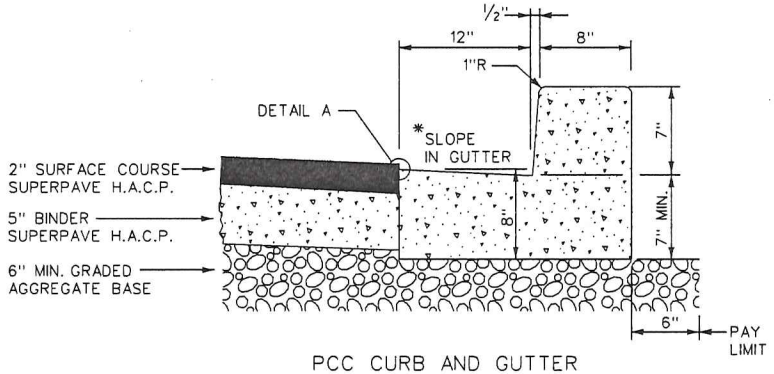


PCC CURB AND GUTTER
WITH FLEXIBLE PAVEMENT

NOTES:

1. TIE ROD ASSEMBLY TO BE INSTALLED AT 5 IN. OF THE INITIAL POUR.
2. #4 BARS SHALL NOT EXTEND THROUGH THE EXPANSION JOINT.
3. * LOW SIDE - 1 IN. PER FT. TOWARD CURB.
   * HIGH SIDE - 5/8 IN. PER FT. AWAY FROM CURB.
4. 6 IN. MIN. DEPTH GRADED AGGREGATE BASE APPLIES TO AREA BENEATH ROADWAY AND CURB AND GUTTER.

| ISSUED: 8/2015 | RECOMMENDED: PROJECT MANAGER | TYPES OF PCC CURB & GUTTER | d. DISTRICT OF COLUMBIA DEPARTMENT OF TRANSPORTATION |
|---|---|---|---|
| REVISION / APPROVAL | APPROVED: Muhammed Khalid CHIEF ENGINEER | | DWG. NO. 606.01 |

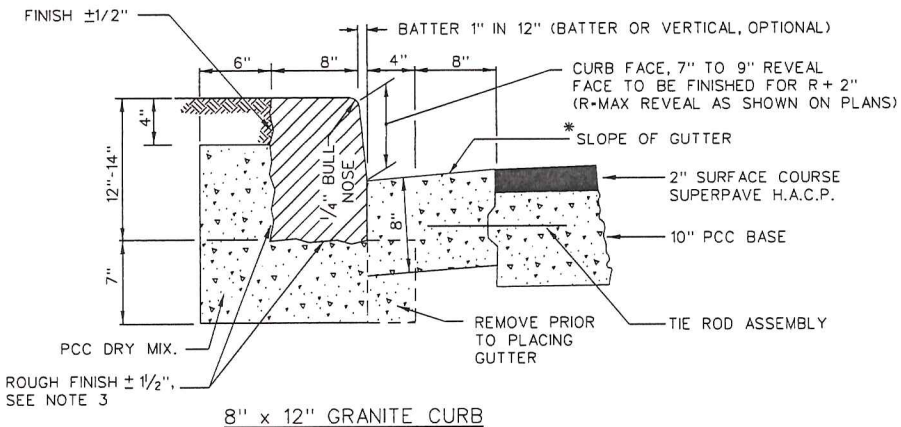


8" x 12" GRANITE CURB
(WITH PCC GUTTER)

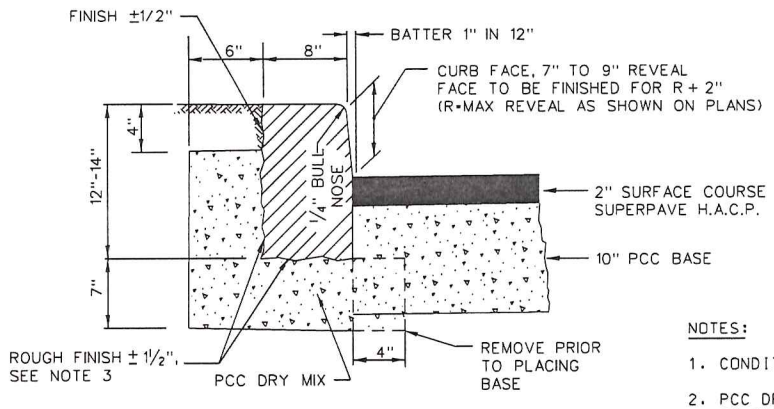


8" x 12" GRANITE CURB
(WITHOUT PCC GUTTER)

NOTES:

1. CONDITIONS AT BACK OF CURB VARY AND ARE AS SHOWN ON THE CONTRACT PLANS.
2. PCC DRY MIX SHALL BE PER DDOT STANDARD SPECIFICATIONS, SECTION 801. IT SHALL MAINTAIN THE SAME TIME LIMITS AS PCC AND SHALL BE WATERED DOWN AFTER SETTING OF GRANITE CURB.
3. THE MINIMUM DEPTH TO CONCAVE SURFACE ON ROUGH FINISH SHALL BE 10 IN.
4. GRANITE CURBS ARE SHOWN WITH A COMPOSITE PAVEMENT SECTION.
5. * LOW SIDE - 1 IN. PER FT. TOWARD CURB
   * HIGH SIDE - 5/8 IN. PER FT. AWAY FROM CURB
6. A 6 IN. MIN. LAYER OF GRADED AGGREGATE BASE SHALL BE PLACED BENEATH THE ROADWAY AND CURB AND GUTTER AND IS NOT SHOWN FOR CLARITY.

| ISSUED: 8/2015 | | RECOMMENDED: Adil Riz PROJECT MANAGER | TYPES OF GRANITE CURBS | d. DISTRICT OF COLUMBIA DEPARTMENT OF TRANSPORTATION |
|---|---|---|---|---|
| REVISION | APPROVAL | APPROVED: Muhammed Khalid CHIEF ENGINEER | | DWG. NO. 606.02 |

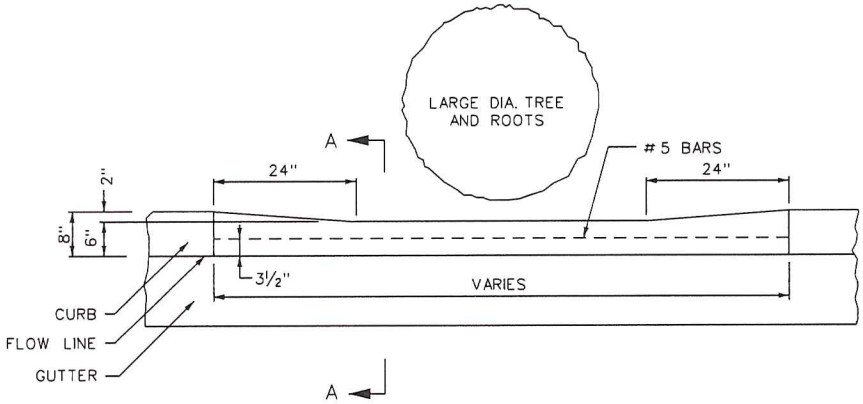


STRAIGHT REINFORCED CONCRETE CURB - PLAN
(WITH REDUCED WIDTH)

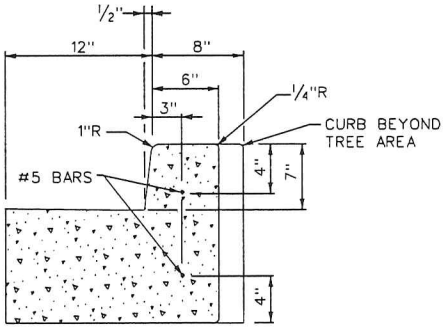


SECTION A-A

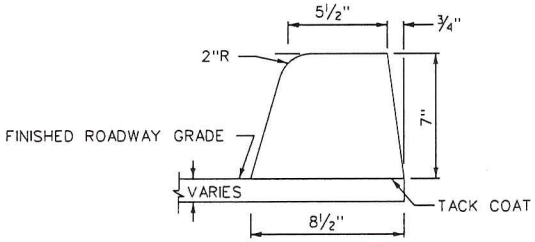


ASPHALT CURB

| ISSUED: 8/2015 | |
|---|---|
| REVISION | APPROVAL |
| | |
| | |
| | |
| | |
| | |

RECOMMENDED: Adil Rizi
PROJECT MANAGER

APPROVED: Muhammed Khalid
CHIEF ENGINEER

TYPES OF CURBS
MISCELLANEOUS

d. DISTRICT OF COLUMBIA
DEPARTMENT OF TRANSPORTATION

DWG. NO. 606.03

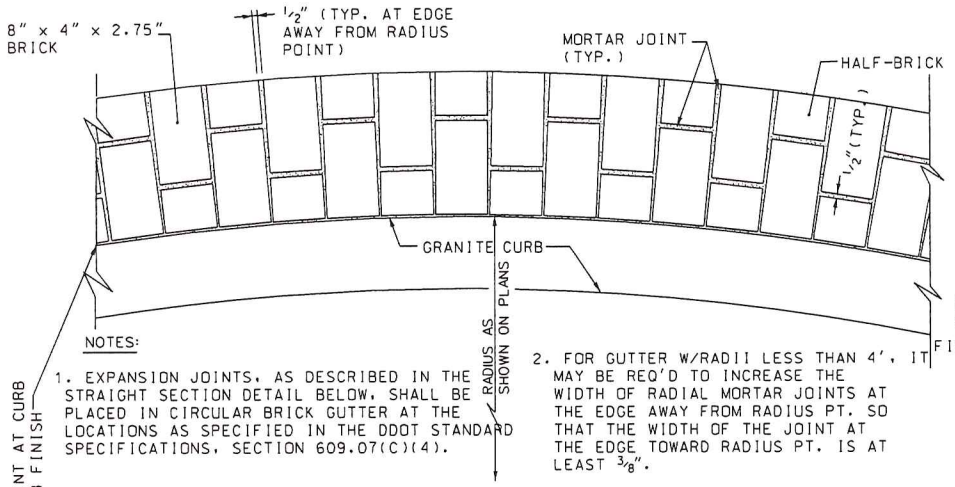


NOTES:

1. EXPANSION JOINTS, AS DESCRIBED IN THE STRAIGHT SECTION DETAIL BELOW, SHALL BE PLACED IN CIRCULAR BRICK GUTTER AT THE LOCATIONS AS SPECIFIED IN THE DDOT STANDARD SPECIFICATIONS, SECTION 609.07(C)(4).
2. FOR GUTTER W/RADII LESS THAN 4', IT MAY BE REQ'D TO INCREASE THE WIDTH OF RADIAL MORTAR JOINTS AT THE EDGE AWAY FROM RADIUS PT. SO THAT THE WIDTH OF THE JOINT AT THE EDGE TOWARD RADIUS PT. IS AT LEAST 3/8".

CIRCULAR SECTION

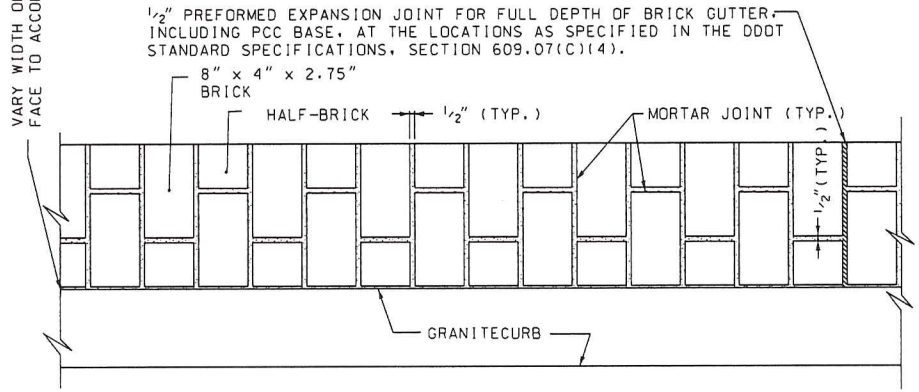


STRAIGHT SECTION

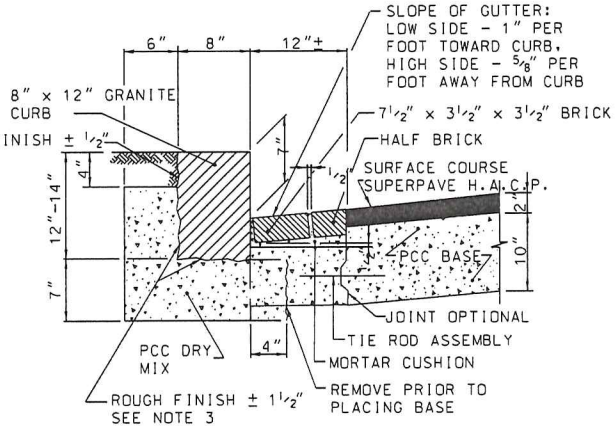


8" x 12" GRANITE CURB WITH BRICK GUTTER

NOTES:

1. CONDITIONS AT BACK OF CURB VARY AND ARE AS SHOWN ON THE CONTRACT PLANS.
2. PCC DRY MIX SHALL BE PER DDOT STANDARD SPECIFICATIONS, SECTION 801. IT SHALL MAINTAIN THE SAME TIME LIMITS AS PCC AND SHALL BE WATERED DOWN AFTER SETTING OF GRANITE CURB.
3. THE MINIMUM DEPTH TO CONCAVE SURFACE ON ROUGH FINISH SHALL BE 10 IN.
4. GRANITE CURB IS SHOWN WITH A COMPOSITE PAVEMENT SECTION.
5. A 6 IN. MIN. LAYER OF GRADED AGGREGATE BASE SHALL BE PLACED BENEATH THE ROADWAY AND CURB AND GUTTER AND IS NOT SHOWN FOR CLARITY.

| ISSUED: 8/2015 | RECOMMENDED: PROJECT MANAGER | PATTERNS FOR BRICK GUTTER | d. DISTRICT OF COLUMBIA DEPARTMENT OF TRANSPORTATION |
|---|---|---|---|
| REVISION / APPROVAL | APPROVED: CHIEF ENGINEER | | DWG. NO. 606.04 |

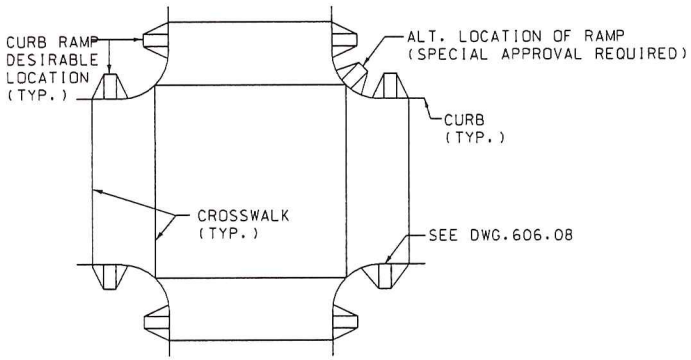


ORTHOGONAL LEVEL INTERSECTION

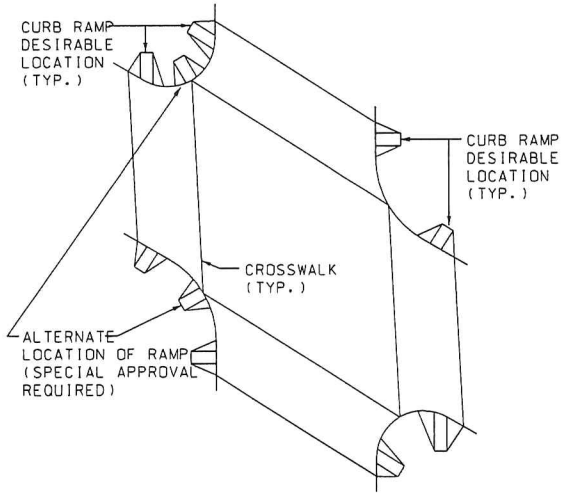


SKEWED LEVEL INTERSECTION

NOTES:

1. AT INTERSECTIONS, IT IS REQUIRED TO CONSTRUCT TWO CURB RAMPS FOR EACH DIRECTION OF PEDESTRIAN CROSSING. SPECIAL APPROVAL SHALL BE OBTAINED TO CONSTRUCT ONE RAMP AT THE CORNER AND MODIFY THE CROSSWALKS. SEE DRAWINGS 606.07 AND 606.08 FOR DETAILS.
2. RAMP LOCATION SHALL BE GOVERNED BY CROSSWALK WIDTH, 15'-20' AS DIRECTED. ALL RAMPS, INCLUDING SIDE FLARES, SHALL BE LOCATED WITHIN A CROSSWALK. ONE SIDE FLARE SHALL ALIGN WITH THE BACK EDGE LINE OF THE CROSSWALK.
3. FOR SKEWED INTERSECTIONS, ACUTE CORNERS SHALL DETERMINE THE LOCATION OF STREET POLES, RAMPS AND CROSSWALKS.
4. ALL RAMPS SHALL CONFORM TO DDOT BEST PRACTICES AND THE LATEST AMERICANS WITH DISABILITIES ACT (ADA) CRITERIA.
5. INSTALL DETECTABLE WARNING SURFACE WITH TRUNCATED DOMES FOR A DISTANCE OF 24" FROM THE BACK OF THE CURB AND FOR THE FULL WIDTH OF RAMP.
6. THE SURFACE OF THE PCC RAMP SHALL BE BROOM FINISHED (STEEL BRISTLE).
7. RAMP SHALL BE CONSTRUCTED WITH PCC SIDEWALK CONCRETE (NO DARKENING AGENTS).
8. ANY STREET POLE FOUNDATION SHALL BE CONSTRUCTED PER DRAWING.
9. DESIGN STORM DRAIN SYSTEMS TO SHED WATER AWAY FROM RAMPS, SO AS NOT TO ENTER THE RAMPS.
10. FINAL LOCATION OF RAMP WILL BE DECIDED BY THE ENGINEER ON SITE.
11. APPROVED WAIVER IS REQUIRED FOR DESIGN EXCEPTIONS.
12. GUTTER PAN IN FRONT OF RAMP SHALL BE BUILT MONOLITHICALLY WITH RAMP AT 2% (5% MAX) RUNNING SLOPE.

| ISSUED: 8/2015 | RECOMMENDED: PROJECT MANAGER | CURB RAMPS LOCATIONS | d. DISTRICT OF COLUMBIA DEPARTMENT OF TRANSPORTATION |
|---|---|---|---|
| REVISION / APPROVAL | APPROVED: Muhammed Khalid CHIEF ENGINEER | | DWG. NO. 606.05 |

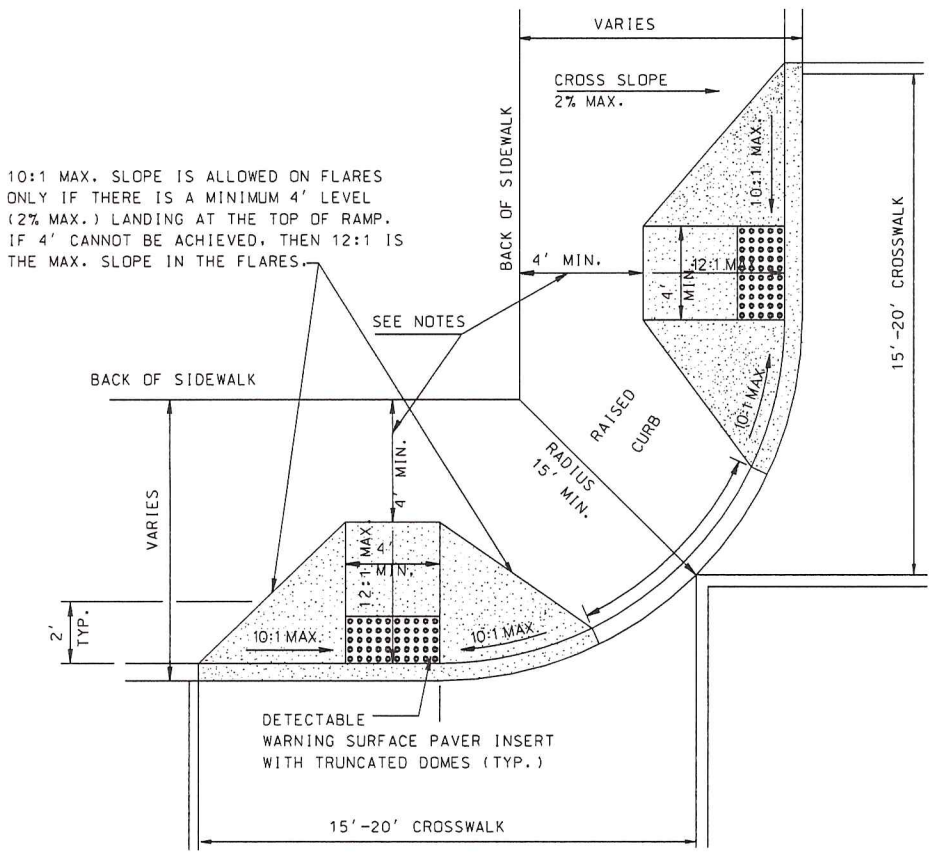


NOTES:

1. AT INTERSECTIONS, IT IS REQUIRED TO CONSTRUCT CURB RAMPS. SPECIAL APPROVAL SHALL BE OBTAINED TO CONSTRUCT ONE RAMP AT THE CORNER AND MODIFY THE CROSSWALKS. SEE DRAWINGS 606.07 AND 606.08 FOR DETAILS.
2. RAMP LOCATION SHALL BE GOVERNED BY CROSSWALK WIDTH, 15'-20' AS DIRECTED. ALL RAMPS, INCLUDING SIDE FLARES, SHALL BE LOCATED WITHIN A CROSSWALK. ONE SIDE FLARE SHALL ALIGN WITH THE BACK EDGE LINE OF THE CROSSWALK.
3. FOR SKEWED INTERSECTIONS, ACUTE CORNERS SHALL DETERMINE THE LOCATION OF STREET POLES, RAMPS AND CROSSWALKS.
4. ALL RAMPS SHALL CONFORM TO DDOT BEST PRACTICES AND THE LATEST AMERICANS WITH DISABILITIES ACT (ADA) CRITERIA.
5. DIMENSIONS SHOWN ARE FOR NEW CONSTRUCTION. FOR ALTERATIONS WHEN THESE DIMENSIONS ARE TECHNICALLY IMPRACTICABLE, AN APPROVED WAIVER IS REQUIRED.
6. INSTALL DETECTABLE WARNING SURFACE PAVERS WITH TRUNCATED DOMES FOR A DISTANCE OF 24" FROM THE BACK OF THE CURB AS SHOWN.
7. THE SURFACE OF THE PCC RAMP SHALL BE BROOM FINISHED (STEEL BRISTLE).
8. RAMP SHALL BE CONSTRUCTED WITH PCC SIDEWALK CONCRETE (NO DARKENING AGENTS).
9. ANY STREET POLE FOUNDATION SHALL BE CONSTRUCTED PER DRAWING.
10. DESIGN STORM DRAIN SYSTEMS TO SHED WATER AWAY FROM RAMPS, SO AS NOT TO ENTER THE RAMPS.
11. FINAL LOCATION OF RAMP WILL BE DECIDED BY THE ENGINEER ON SITE.
12. APPROVED WAIVER IS REQUIRED FOR DESIGN EXCEPTIONS.
13. GUTTER PAN IN FRONT OF RAMP SHALL BE BUILT MONOLITHICALLY WITH RAMP AT 2% (5% MAX) RUNNING SLOPE.
14. IF TOP LANDING FOR CURB RAMP HAS A VERTICAL OBSTRUCTION, A TURNING SPACE OF 5'X5' WILL BE REQUIRED AT TOP LANDING.

| ISSUED: 8/2015 | RECOMMENDED: PROJECT MANAGER | CURB RAMPS LOCATION (TYP.) | d. DISTRICT OF COLUMBIA DEPARTMENT OF TRANSPORTATION |
|---|---|---|---|
| REVISION / APPROVAL | APPROVED: Muhammad Khalid CHIEF ENGINEER | | DWG. NO. 606.06 |

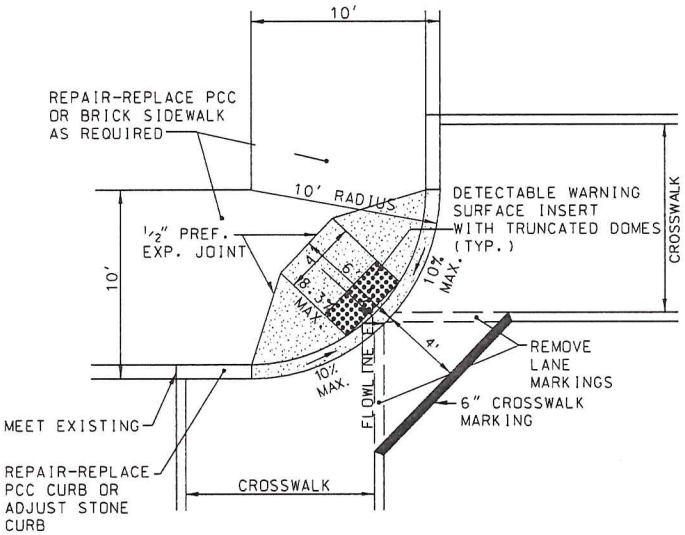


AT CORNER-10'
(SPECIAL APPROVAL REQUIRED)

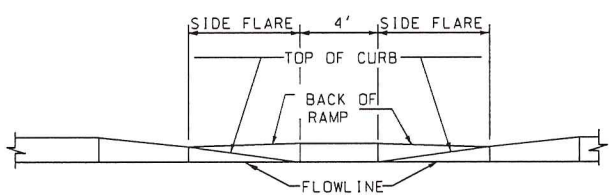


ELEVATION

NOTES:

1. APPROVED WAIVER IS REQUIRED FOR DESIGN EXCEPTIONS.
2. FOR SKEWED INTERSECTIONS, ACUTE CORNERS SHALL DETERMINE THE LOCATION OF STREET POLES, RAMPS AND CROSSWALKS.
3. ALL RAMPS SHALL CONFORM TO DDOT BEST PRACTICES AND THE LATEST AMERICANS WITH DISABILITIES ACT (ADA) CRITERIA.
4. INSTALL DETECTABLE WARNING SURFACE WITH TRUNCATED DOMES FOR A DISTANCE OF 24" FROM THE BACK OF THE CURB AND FOR THE FULL WIDTH OF RAMP.
5. THE SURFACE OF THE RAMP SHALL BE BROOM FINISHED (STEEL BRISTLE).
6. RAMP SHALL BE CONSTRUCTED WITH PCC SIDEWALK CONCRETE (NO DARKENING AGENTS).
7. ANY STREET POLE FOUNDATION SHALL BE CONSTRUCTED PER DRAWINGS.
8. DESIGN STORM DRAIN SYSTEMS TO SHED WATER AWAY FROM RAMPS, SO AS NOT TO ENTER THE RAMPS.
9. FOR WIDTHS OF SIDEWALK & ANGLES OF INTERSECTION DIF. FROM THAT SHOWN, THE ENGINEER WILL MODIFY RAMP DESIGN ACCORDINGLY SO THAT SLOPE REQUIREMENTS ARE MET.
10. DETAILS SHOWN FOR INSTALLATION OF RAMPS IN EXIST. CONSTRUCTION TO BE USED ONLY WHEN 2 RAMPS AT CORNER CANNOT BE CONSTRUCTED IN ACCORDANCE W/ ADA CRITERIA.
11. GUTTER, IF ANY, NOT SHOWN. REPAIR OF GUTTER, IF REQUIRED, SHALL BE DONE UNDER THE APPROPRIATE PAY ITEM.
12. THE FINAL LOCATION OF RAMP WILL BE DECIDED BY THE ENGINEER ON SITE.
13. GUTTER PAN IN FRONT OF RAMP SHALL BE BUILT MONOLITHICALLY WITH RAMP AT 2% RUNNING SLOPE (5% MAX.).
14. EXTEND SIDE FLARE(S) IF REQUIRED TO ACHIEVE MAXIMUM 12:1 SLOPE IN FLARE(S) (WHERE 8.3% LONGITUDINAL SLOPE IN CENTER OF RAMP AND 4'-0" CLEAR SIDEWALK SPACE IN BACK OF RAMP CANNOT BE OBTAINED).
15. BOTTOM LANDINGS SHALL NOT INTERFERE WITH TRAVEL LANES.

| ISSUED: 8/2015 | RECOMMENDED: PROJECT MANAGER | DIAGONAL CURB RAMP | d. DISTRICT OF COLUMBIA DEPARTMENT OF TRANSPORTATION |
|---|---|---|---|
| REVISION / APPROVAL | APPROVED: Mohammed Khalid CHIEF ENGINEER | | DWG. NO. 606.07 |

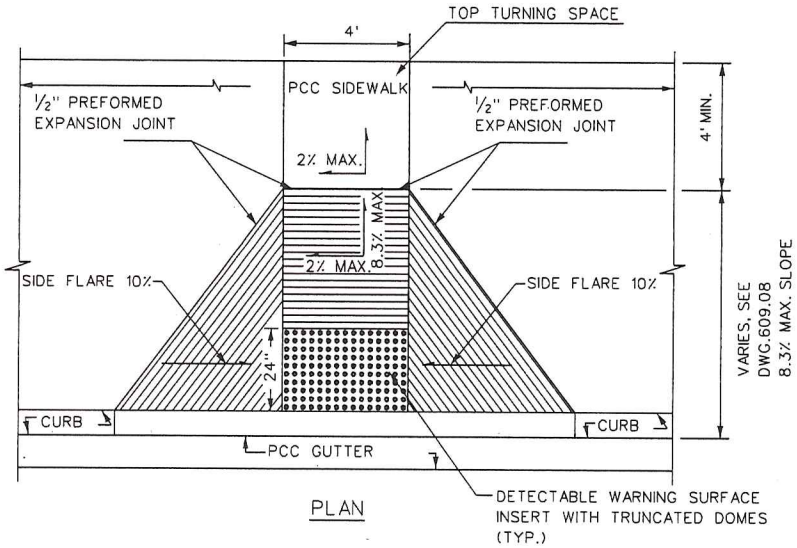


PLAN

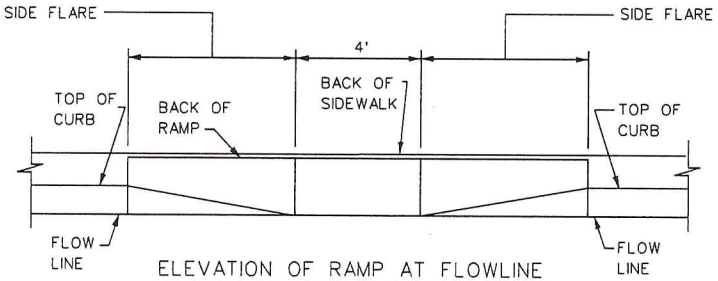


ELEVATION OF RAMP AT FLOWLINE

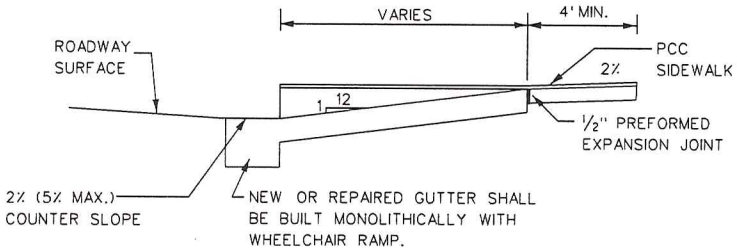


SECTION AT CENTERLINE OF RAMP

NOTES:

1. THE SURFACE OF THE PCC RAMP SHALL BE BROOM FINISHED (STEEL BRISTLE).
2. ALL RAMPS SHALL CONFORM TO DDOT BEST PRACTICES AND THE LATEST AMERICANS WITH DISABILITIES ACT (ADA) CRITERIA.

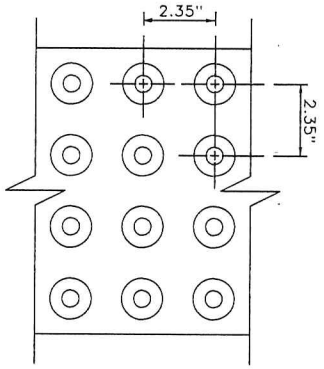


DOME SPACING

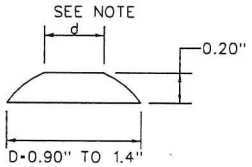


DOME SECTION

DETECTABLE WARNING SURFACE/TRUNCATED DOME NOTES:

1. INSTALL DETECTABLE WARNING SURFACE PAVERS WITH TRUNCATED DOMES FOR A DISTANCE OF 24" FROM THE BACK OF THE CURB AND FOR THE FULL WIDTH OF RAMP.
2. DETECTABLE WARNING SURFACE SHALL CONSIST OF A SURFACE OF TRUNCATED DOMES ALIGNED ON A SQUARE GRID IN THE PREDOMINANT DIRECTION OF TRAVEL TO PERMIT WHEELS TO ROLL BETWEEN DOMES.
3. DETECTABLE WARNING SURFACE/TRUNCATED DOME INSERT SHALL CONTRAST VISUALLY WITH ADJACENT WALKING SURFACES.
4. d IS MORE THAN 50% OF D.
5. APPROVE COLOR FOR TRUNCATED DOME IS RED. PROJECT MANAGERS SHALL ACCEPT OTHER COLORS FOR TRUNCATED DOME UPON REQUEST AND COMPLIANCE EVALUATION.

| ISSUED: 8/2015 | RECOMMENDED: PROJECT MANAGER | CURB RAMP DETAILS | d. DISTRICT OF COLUMBIA DEPARTMENT OF TRANSPORTATION |
|---|---|---|---|
| REVISION / APPROVAL | APPROVED: Mohammed Khalid CHIEF ENGINEER | | DWG. NO. 606.08 |

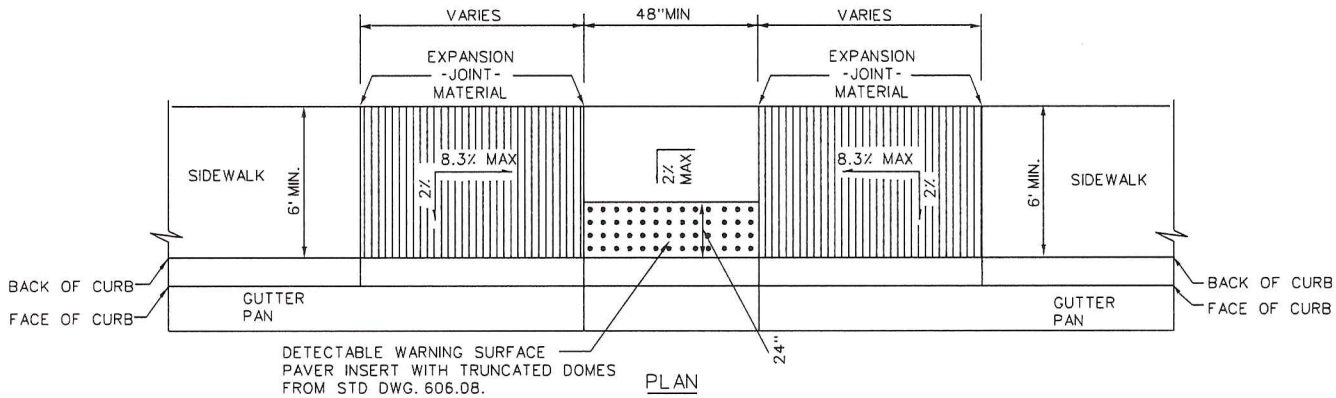


PLAN

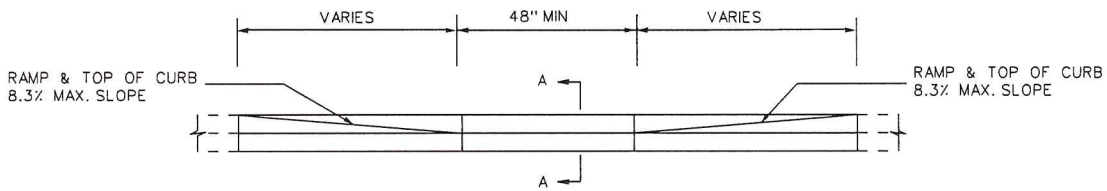


ELEVATION

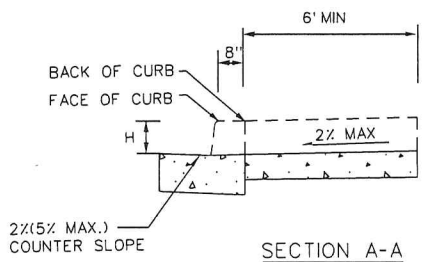


SECTION A-A

NOTES:

1. ALL RAMPS SHALL CONFORM TO DDOT BEST PRACTICES AND THE LASTEST AMERICANS WITH DISABILITIES ACT (ADA) CRITERIA.
2. THE SURFACE OF THE PCC RAMP SHALL BE BROOM FINISH (STEEL BRISTLE).
3. GUTTER PAN IN FRONT OF RAMP SHALL BE BUILT MONOLITHICALLY WITH RAMP AT 2% (5%) RUNNING SLOPE.
4. H - HEIGHT OF CURB IN INCHES.

| ISSUED: 8/2015 | RECOMMENDED: PROJECT MANAGER | SINGLE PARALLEL CONTINUOUS RAMP | d. DISTRICT OF COLUMBIA DEPARTMENT OF TRANSPORTATION |
|---|---|---|---|
| REVISION / APPROVAL | APPROVED: Muhammed Khalid CHIEF ENGINEER | | DWG. NO. 606.09 |

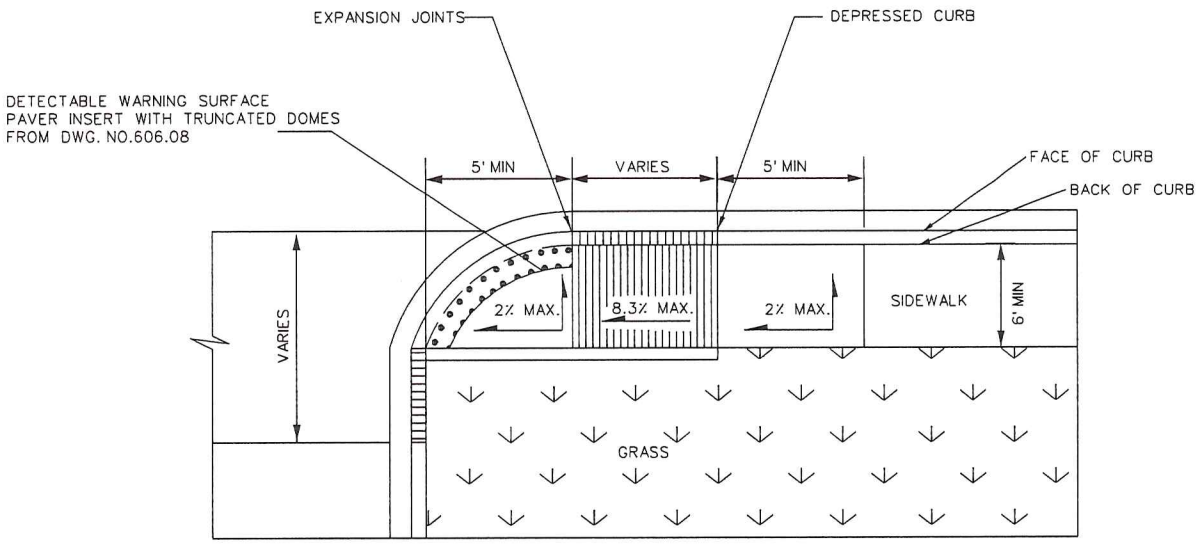


SINGLE PERPENDICULAR RAMP ON SHORT RADIUS

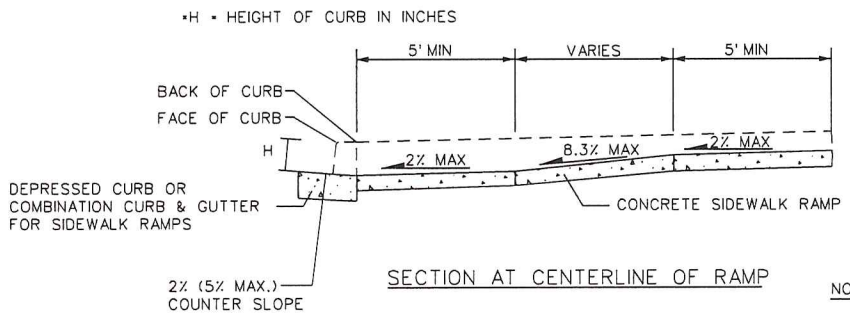


SECTION AT CENTERLINE OF RAMP

NOTES:

1. ALL RAMPS SHALL CONFORM TO DDOT BEST PRACTICES AND THE LASTEST AMERICANS WITH DISABILITIES ACT (ADA) CRITERIA.
2. THE SURFACE OF THE PCC RAMP SHALL BE BROOM FINISHED (STEEL BRISTLE).
3. GUTTER PAN IN FRONT OF RAMP SHALL BE BUILT MONOLITHICALLY WITH RAMP AT 2% (5%) RUNNING SLOPE.
4. H = HEIGHT OF CURB IN INCHES.

| ISSUED: 8/2015 | RECOMMENDED: PROJECT MANAGER | SINGLE DIRECTIONAL RAMP ON SHORT RADIUS FOR LEVEL ROADWAY | d. DISTRICT OF COLUMBIA DEPARTMENT OF TRANSPORTATION |
|---|---|---|---|
| REVISION / APPROVAL | APPROVED: Muhammed Khalid CHIEF ENGINEER | | DWG. NO. 606.10 |

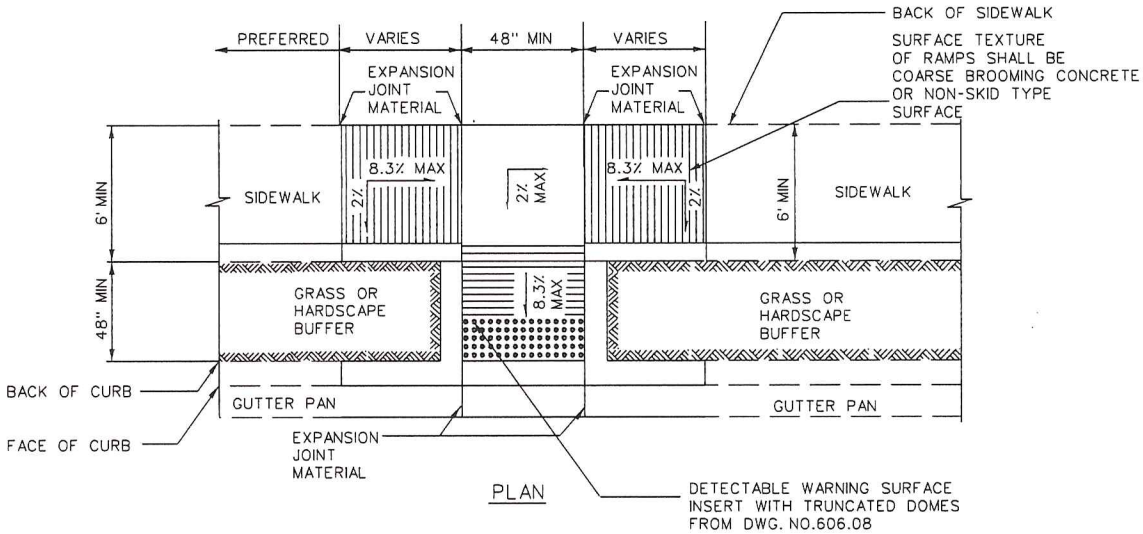


PLAN

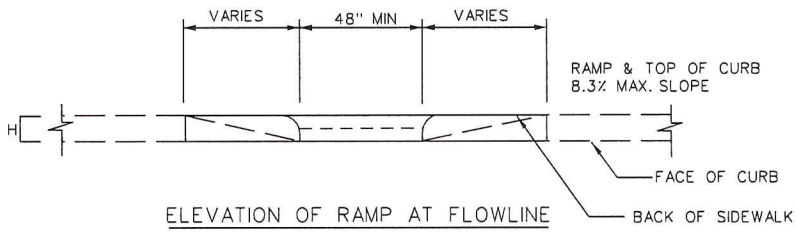


ELEVATION OF RAMP AT FLOWLINE

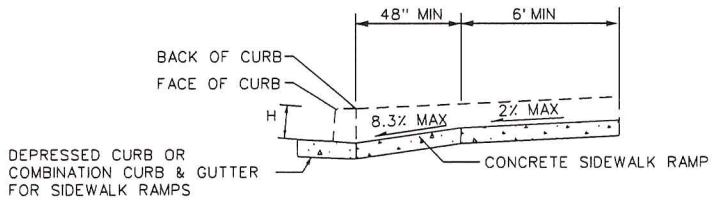


SECTION AT CENTERLINE OF RAMP

NOTES:

1. ALL RAMPS SHALL CONFORM TO DDOT BEST PRACTICES AND THE LASTEST AMERICANS WITH DISABILITIES ACT (ADA) CRITERIA.
2. THE SURFACE OF THE PCC RAMP SHALL BE BROOM FINISHED (STEEL BRISTLE).
3. GUTTER PAN IN FRONT OF RAMP SHALL BE BUILT MONOLITHICALLY WITH RAMP AT 2% (5%) RUNNING SLOPE.
4. SPECIAL APPROVAL IS REQUIRED IF THE RUNNING SLOPE EXCEEDS 8.3% MAX ALLOWED WHEN THE LENGTH OF THE RAMP IS LESS THAN 15'.
5. H - HEIGHT OF CURB IN INCHES.

| ISSUED: 8/2015 | RECOMMENDED: PROJECT MANAGER | COMBINATION RAMP | d. DISTRICT OF COLUMBIA DEPARTMENT OF TRANSPORTATION |
|---|---|---|---|
| REVISION / APPROVAL | APPROVED: Muhammed Khalid CHIEF ENGINEER | | DWG. NO. 606.11 |

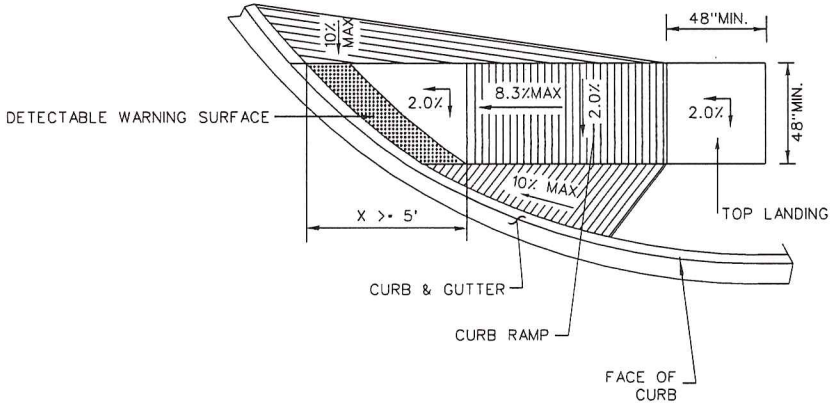


PLAN VIEW
TYPE SINGLE DIRECTION A

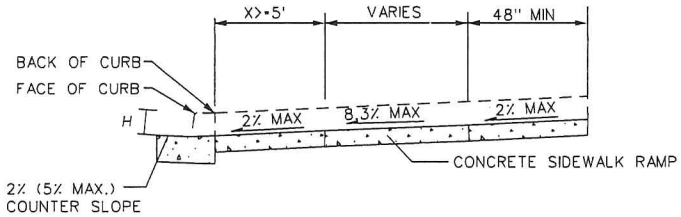


SECTION AT CENTERLINE OF RAMP

NOTES:

1. ALL RAMPS SHALL CONFORM TO DDOT BEST PRACTICES AND THE LASTEST AMERICANS WITH DISABILITIES ACT (ADA) CRITERIA.
2. THE SURFACE OF THE PCC RAMP SHALL BE BROOM FINISHED (STEEL BRISTLE).
3. GUTTER PAN IN FRONT OF RAMP SHALL BE BUILT MONOLITHICALLY WITH RAMP AT 2% (5%) RUNNING SLOPE.
4. H = HEIGHT OF CURB IN INCHES.

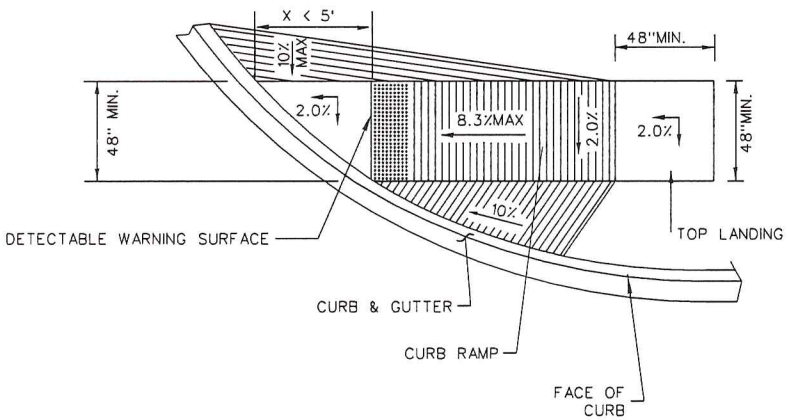


PLAN VIEW
TYPE SINGLE DIRECTION B

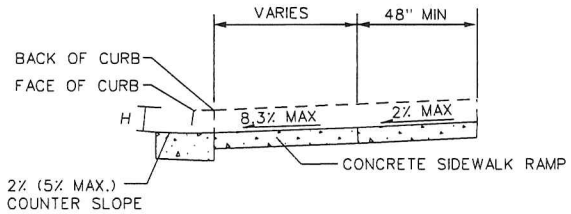


SECTION AT CENTERLINE OF RAMP

| ISSUED: 8/2015 | RECOMMENDED: PROJECT MANAGER | DIRECTIONAL RAMP | d. DISTRICT OF COLUMBIA DEPARTMENT OF TRANSPORTATION |
|---|---|---|---|
| REVISION / APPROVAL | APPROVED: Muhammed Khalid CHIEF ENGINEER | | DWG. NO. 606.12 |

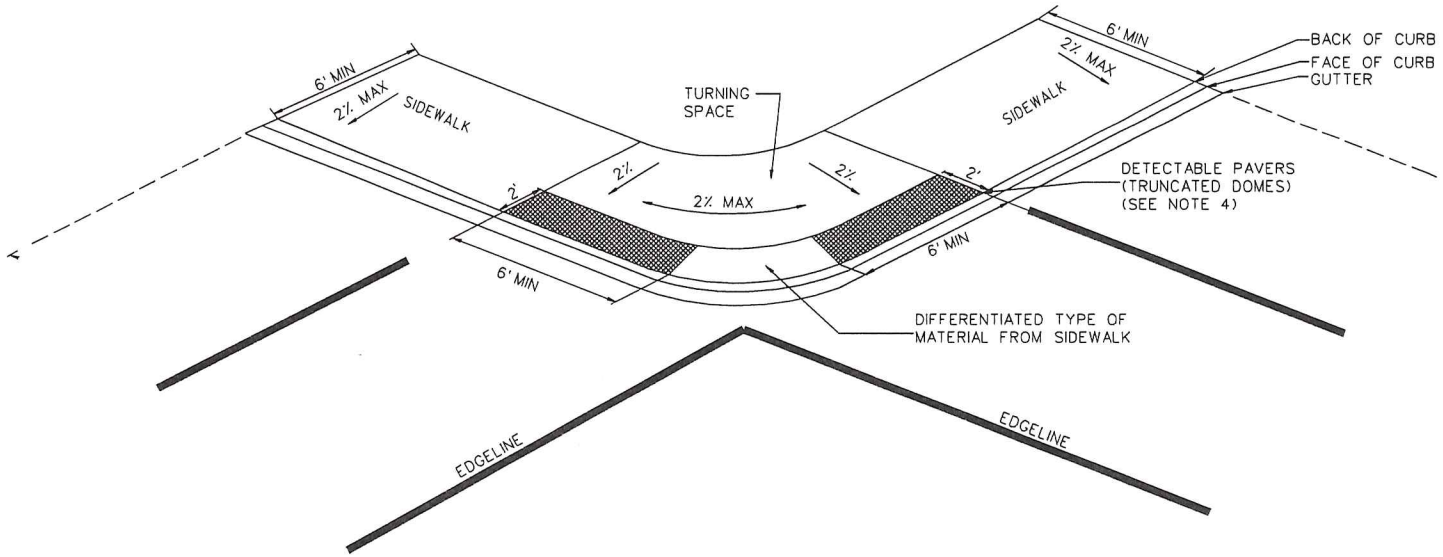


15' CORNER RADIUS

NOTES:

1. CURB AND GUTTER SHOULD BE FLUSH.
2. ALL RAMPS SHALL CONFORM TO DDOT BEST PRACTICES AND THE LASTEST AMERICANS WITH DISABILITIES ACT (ADA) CRITERIA.
3. GUTTER PAN IN FRONT OF RAMP SHALL BE BUILT MONOLITHICALLY WITH RAMP AT 2% (5%) RUNNING SLOPE.
4. FOR TRUNCATED DOMES, PLEASE REFER TO 606.08.

| ISSUED: 8/2015 | | RECOMMENDED: PROJECT MANAGER | BLENDED TRANSITION | d. DISTRICT OF COLUMBIA DEPARTMENT OF TRANSPORTATION |
|---|---|---|---|---|
| REVISION | APPROVAL | APPROVED: Muhammed Khalid CHIEF ENGINEER | | DWG. NO. 606.13 |